144/430MHz FM DUAL BANDER

TM-D700A/E

SERVICE MANUAL

KENWOOD

© 1999-11 PRINTED IN JAPAN
B51-8504-00(S) 880

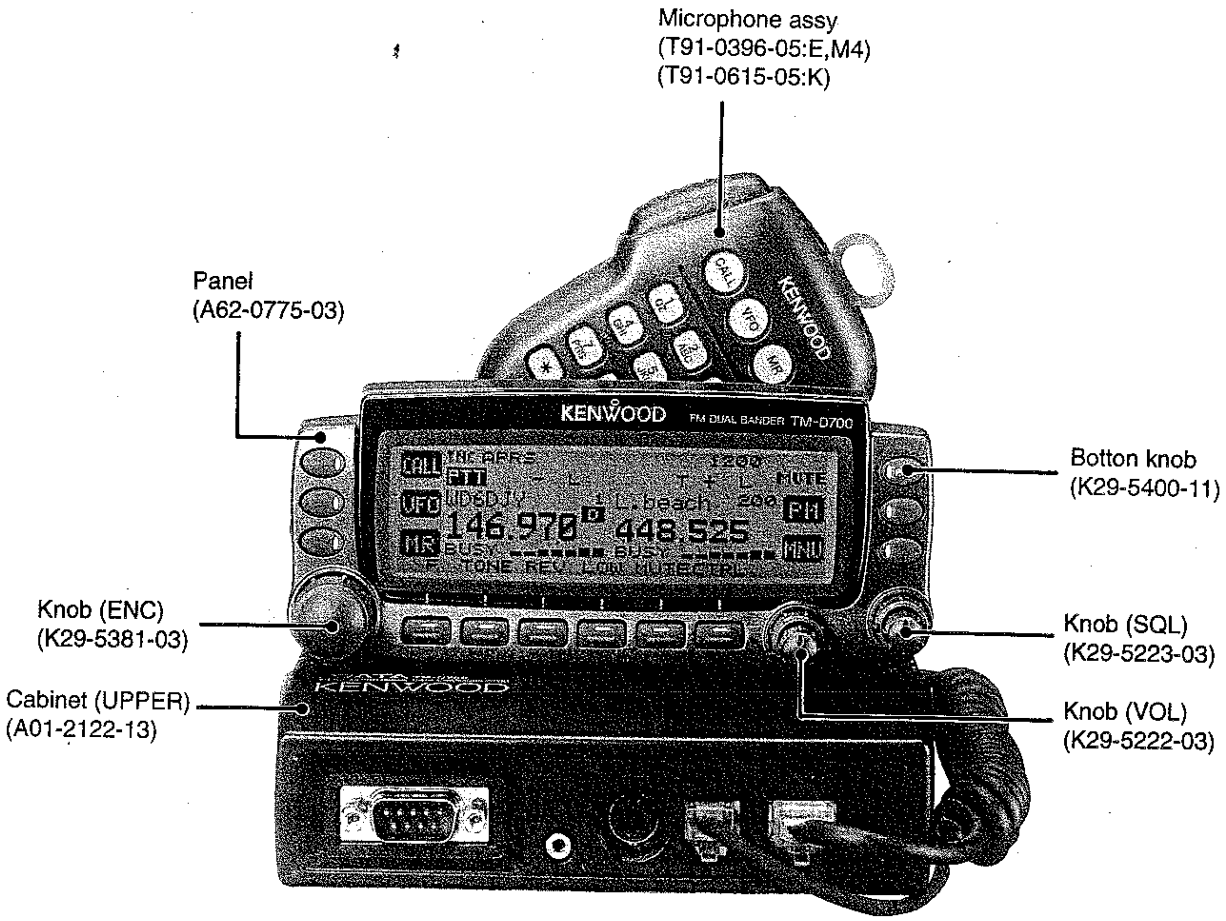

Photo is TM-D700A (K type)

CONTENTS

CIRCUIT DESCRIPTION 3
SEMICONDUCTOR DATA 17
DESCRIPTION OF COMPONENTS 20
TERMINAL FUNCTION 22
PARTS LIST 23
EXPLODED VIEW 35
PACKING 36
ADJUSTMENT 37
PC BOARD VIEWS 53
SCHEMATIC DIAGRAM 65
BLOCK DIAGRAM 77
WIRING DIAGRAM 79
LEVEL DIAGRAM 80
OPTION (PG-4X) 81
SPECIFICATIONS ..... BACK COVER

TM-D700A/E

CIRCUIT DESCRIPTION

Outline

This device is a dual-band 144/430MHz FM car transceiver planned and designed for amateur radio communications and has the following features.

1. Has a built-in TNC which conforms to the AX.25 protocol. With a portable computer, allows you to enjoy Packet operation quite easily.
2. Includes a program for dealing with data formats supported by Automatic Packet/ Position Reporting System (APRS®).
3. Is capable of receiving packet data on one band while receiving audio on another band.
4. Enhanced Programmable Memory (PM) channels store virtually entire current operating environments for your quick recall.
5. Contains a total of 200 memory channels to program frequencies and other various data. Allows each memory channel to be named using up to 8 alphanumeric and special ASCII characters.
6. "Visual Scan" graphically and simultaneously shows the conditions of up to 181 frequency channels.
7. Continuous Tone Coded Squelch System (CTCSS) or Digital Code Squelch (DCS) rejects unwanted calls from other stations.
8. The separate front panel can be mounted in a convenient different place from the main unit.
9. Equipped with an easy-to-read large LCD with alphanumeric display capability.
10. Enhances the functions of an optional VC-H1 Interactive Visual Communicator designed for plug-and-play color slow-scan television (SSTV).
11. Utilizes Sky Command System II designed to control a KENWOOD HF transceiver at a remote location (U.S.A./ Canada only).

List of Destinations

Model		Guarantee frequency range (MHz)		Output Power (W)	
		144	430	144	430
TM-D700A	K	144~148	438~450	50	35
	M4	144~146	430~440	25	25
TM-D700E	E	144~146	430~440	50	35

K: U.S.A/Canada M4: Taiwan E: Europe

Accessories

Name	Parts number	Remarks	Destination		
			K	E	M4
Modular cable	E30-3391-05	3m	1	1	1
Panel bracket	J29-0663-03		1	1	1
	J29-0664-13		1	1	1
Bracket	J29-0628-23		1	1	1
Microphone	T91-0396-05			1	1
	T91-0615-05	DTMF BACK LIT	1		
DC cord	E30-2111-15		1	1	1
Fuse	F51-0017-05	15A	1	1	1
Mic Hook	J19-1526-04		1		
Instruction manual	B62-1228-00	English	1	1	1
	B62-1232-00	French	1	1	
	B62-1231-00	Spanish	1	1	
	B62-1230-00	German		1	
	B62-1233-00	Dutch		1	
	B62-1273-00	English APRS	1	1	1
	B62-1234-00	Chinese			1
	B62-1229-00	Italian		1	
Warranty card	B46-0469-10		1		
	B46-0337-03			1	
Cable	E30-3400-05	Ø2.5mm GPS jack	1	1	1
Screw set	N99-0331-05	For the body		1	1
Screw set	N99-0382-05	For the body and MIC hook	1		
Screw set	N99-2014-05	For the panel bracket	1	1	1
Foot	J02-0488-04	For protect from scratch on a desk	4	4	4
Pamphlet	B59-1684-00		1		

Units for Each Model and Destination

Model		TX-RX UNIT	LCD ASSY
TM-D700A	K	X57-5860-11	B38-0829-05
	M4	X57-5860-21	
TM-D700E	E	X57-5862-71	

CIRCUIT DESCRIPTION

1.Frequency configuration

The TM-D700 has an individual VCO and PLL unit for both VHF and UHF bands. Using these separate VCO and PLL circuit, it can receive 2 separate bands at the same time. Also, you can perform the full-duplex operation.

The VHF VCO is used for the following functions:
(i) VHF transmission
(ii) The first local oscillator for the main band(VHF) reception.
(iii) The first local oscillator for the sub band(UHF) reception(doubled).

The UHF VCO is used for the following functions:
(i) UHF transmission
(ii) The first local oscillator for the main band(UHF) reception.
(iii) The first local oscillator for the sub band(VHF) reception(halved).

The PLL reference frequency is generated by a 12.8MHz crystal oscillator connected to the VHF and UHF PLL ICs. This reference frequency is used for both PLL circuits.

The second local oscillator for the VHF band uses the tripled 12.8MHz reference oscillator frequency. The 45.05MHz second local oscillator for the UHF band is generated by the IF IC crystal oscillator circuit.

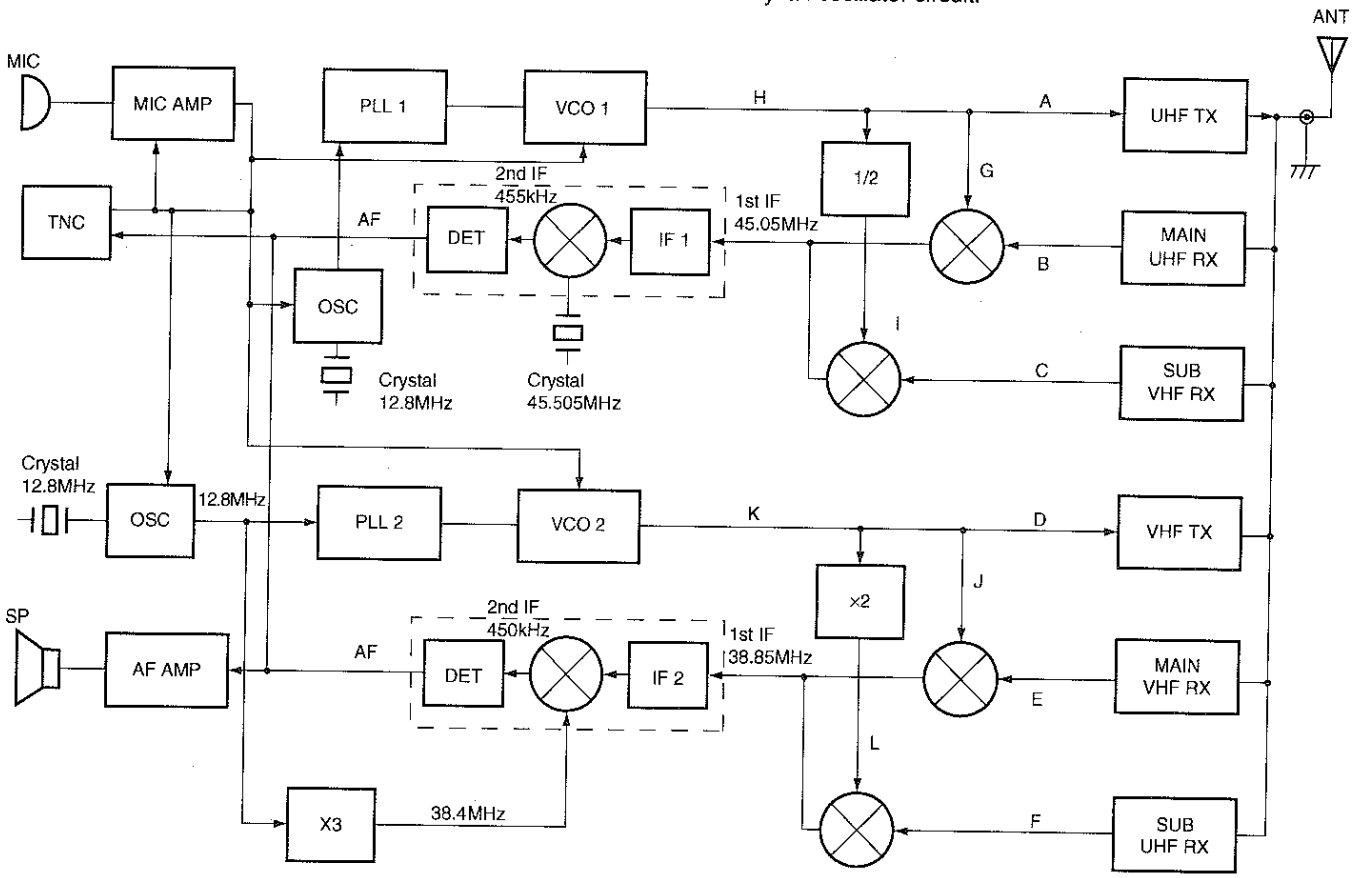

A	K	438.000~449.995MHz	D	K	144.000~147.995MHz	G	K	392.950~404.945MHz	J	K	182.850~186.845MHz
	E	430.000~439.995MHz		E	144.000~145.995MHz		E	384.950~394.945MHz		E	182.850~184.845MHz
	M4	430.000~439.995MHz		M4	144.000~145.995MHz		M4	384.950~394.945MHz		M4	182.850~184.845MHz
B	K	438.000~439.995MHz	E	K	144.000~147.995MHz	H	K	378.100~386.090MHz	K	K	199.575~205.5725MHz
	E	430.000~439.995MHz		E	144.000~145.995MHz		E	378.100~382.090MHz		E	195.575~200.5725MHz
	M4	430.000~439.995MHz		M4	144.000~145.995MHz		M4	378.100~382.090MHz		M4	195.575~200.5725MHz
C	K	144.000~147.995MHz	F	K	438.000~449.995MHz	I	K	189.050~193.045MHz	L	K	399.150~411.145MHz
	E	144.000~145.995MHz		E	430.000~439.995MHz		E	189.050~191.045MHz		E	391.150~401.145MHz
	M4	144.000~145.995MHz		M4	430.000~439.995MHz		M4	189.050~191.045MHz		M4	391.150~401.145MHz

Fig.1 Frequency configuration

CIRCUIT DESCRIPTION

2. Receiver system

2-1.Main VHF Receiver

The incoming signal from the antenna passes through a filter circuit and goes to the RF amplifier (Q205). The amplified signal enters the helical resonator (L209, L207, L204). The helical resonator is tuned to the desired frequency according to the BPF voltage output from the CPU with the varicap (D206, D205, D202). After the signal passes through a filter, it is amplified by another RF amplifier (Q202) and goes to the single balanced mixer (Q200, Q201). The frequency of the signal is converted by the first local oscillator (Upper heterodyne) to generate a 38.85MHz first IF signal. The signal passes through the MCF (XF100), is amplified by the IF amplifier (Q112) and enters the IF IC (IC100). Then the signal is converted to the 450kHz second IF signal by the second local oscillator, which is tripled 12.8MHz (Lower heterodyne). Then it is detected to generate an audio signal.

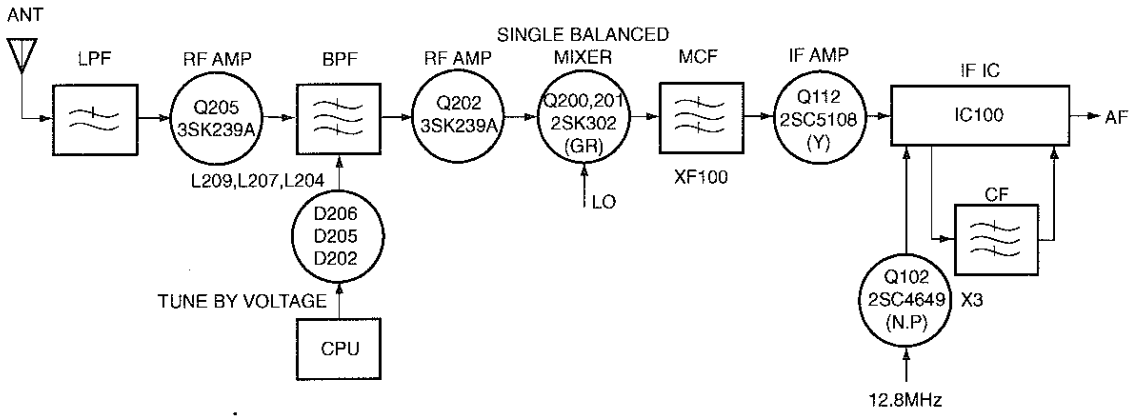

Fig.2 Main VHF Receiver circuit

2-2.Main UHF Receiver

The incoming signal from the antenna passes through a filter circuit and enters the RF amplifier (Q508). The amplified signal passes through the SAW filter (L517), is amplified by another RF amplifier (Q505). Then it passes through the LC filter (L508) and enters the single balanced mixer (Q501, Q502). The frequency of the signal is converted by the first local oscillator (Lower heterodyne) to generate a 45.05MHz first IF signal. The signal passes through the MCF (XF400), is amplified by the IF amplifier (Q406) and enters the IF IC (IC400). The signal is converted to the 455kHz second IF signal by the second local oscillator (Upper heterodyne). Then it is detected to generate an audio signal.

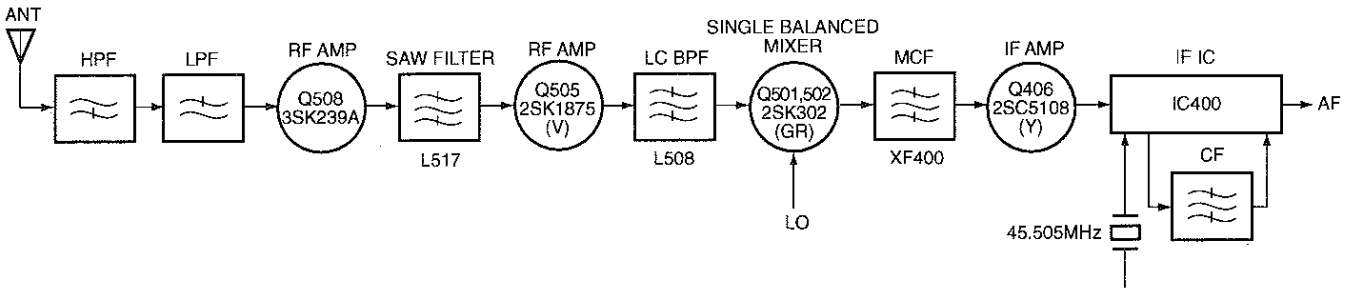

Fig.3 Main UHF Receiver circuit

CIRCUIT DESCRIPTION

2-3.Sub VHF Receiver

The signal distributed from the RF amplifier (Q205) at the main VHF receiver circuit passes through a filter circuit. Then it enters the RF amplifier (Q507). The amplified signal goes to the single balanced mixer (Q501, Q502). The frequency of the signal is converted by the first local oscillator generated by half of the UHF VCO oscillator frequency, using the prescaler (IC303). It converts to the upper heterodyne frequency to generate a 45.05MHz first IF signal. The signal passes through the MCF (XF400). Then it is amplified by the IF amplifier (Q406), and enters the IF IC (IC400). The signal is converted to the 455kHz second IF signal, using the second local oscillator (Upper heterodyne). Then the signal is detected to generate an audio signal.

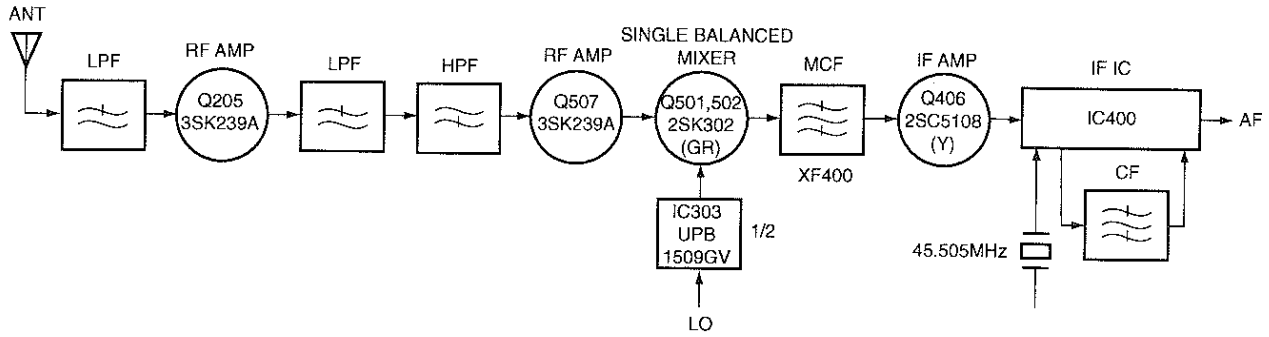

Fig.4 Sub VHF Receiver circuit

2-4.Sub UHF Receiver

The signal distributed from the RF amplifier (Q508) at the main UHF receiver circuit passes through a filter circuit. Then it enters the single balanced mixer (Q200, Q201). The signal frequency is converted by the first local oscillator, generated by doubling the VHF VCO oscillator frequency (Lower heterodyne) by Q7, to generate a 38.85MHz first IF signal. The signal passes through the MCF (XF100). Then it is amplified by the IF amplifier (Q112), and enters the IF IC (IC100). The signal is converted to the 450kHz second IF signal by the second local oscillator generated by tripling the 12.8MHz reference oscillator frequency (Lower heterodyne). Then the signal is detected to generate an audio signal.

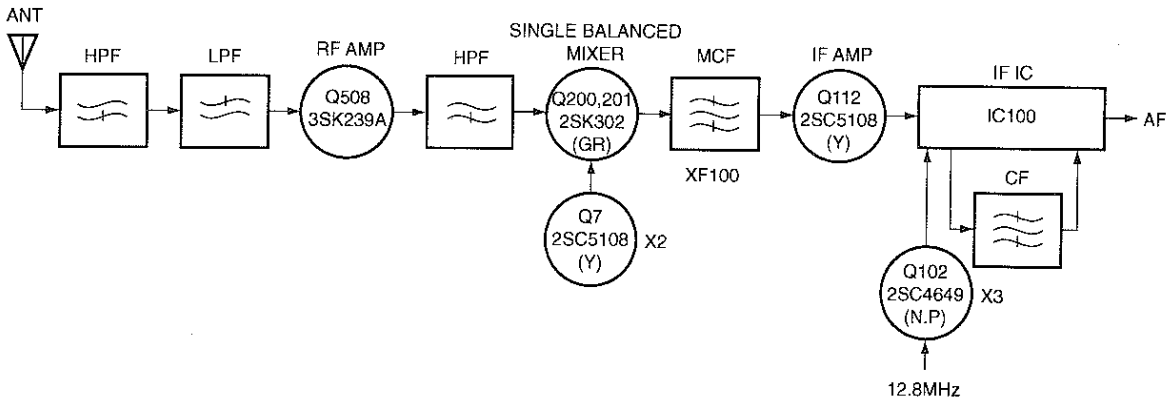

Fig.5 Sub UHF Receiver circuit

CIRCUIT DESCRIPTION

Item	Rating
Center Frequency	38.85MHz
Pass band width	±7.5kHz or more at 3dB
Attenuation band width	±25kHz or less at 40dB
Guaranteed attenuation	80dB or more within fo -910kHz (Spurious:20dB or more within ±1MHz)
Ripple	1dB or less
Insertion loss	3dB or less
Termination impedance	500Ω ±5%, 6pF±0.5pF

Table1 MCF(L71-0491-05) (TX-RX Unit XF100)

Item	Rating
Center Frequency	45.05MHz
Pass band width	±7.5kHz or more at 3dB
Attenuation band width	±22kHz or less at 25dB
Guaranteed attenuation	80dB or more within fo -910kHz (Spurious:40dB or more within ±1MHz)
Ripple	1dB or less
Insertion loss	4dB or less
Termination impedance	800Ω ±10%, 2pF±10%

Table4 MCF(L71-0409-15) (TX-RX Unit XF400)

Item	Rating
Norminal center frequency	450kHz
6dB band width	±7.5kHz or more (from 450kHz)
50dB band width	±15.0kHz or less (from 450kHz)
Ripple	2dB or less (within 450±5kHz)
Insertion loss	6dB or less (at minimum lost point)
Guaranteed attenuation	35dB or more (within 450±100kHz)
I/O matching terminating impedance	1.5kΩ

Table2 Ceramic filter(L72-0979-05) (TX-RX Unit CF101)

Item	Rating
Norminal center frequency	455kHz
6dB band width	±7.5kHz or more (from 455kHz)
50dB band width	±15.0kHz or less (from 455kHz)
Ripple	2dB or less (within 455±5kHz)
Insertion loss	6dB or less (at maximum output point)
Guaranteed attenuation	35dB or more (within 455±100kHz)
I/O matching terminating impedance	1.5kΩ

Table5 Ceramic filter(L72-0981-05) (TX-RX Unit CF401)

Item	Rating
Norminal center frequency	450kHz
6dB band width	±4.5kHz or more (from 450kHz)
50dB band width	±10.0kHz or less (from 450kHz)
Ripple	2dB or less (within 450±3kHz)
Insertion loss	6dB or less (at minimum lost point)
Guaranteed attenuation	35dB or more (within 450±100kHz)
I/O matching terminating impedance	2.0kΩ

Table3 Ceramic filter(L72-0971-05) (TX-RX Unit CF100) (E type only)

Item	Rating
Norminal center frequency	455kHz
6dB band width	±4.5kHz or more (from 455kHz)
50dB band width	±10.0kHz or less (from 455kHz)
Ripple	2dB or less (within 455±3kHz)
Insertion loss	6dB or less (at maximum output point)
Guaranteed attenuation	35dB or more (within 455±100kHz)
I/O matching terminating impedance	2.0kΩ

Table6 Ceramic filter(L72-0980-05) (TX-RX Unit CF400) (E type only)

CIRCUIT DESCRIPTION

2-5.Audio Circuit

The detected VHF audio signal is amplified by Q108 and de-emphasized by Q110. The UHF audio signal is amplified by Q402 and de-emphasized by Q405. One of these audio signals is selected with a cross point switch (IC702). The signal passes through the electronic variable resistor (IC804), is amplified by the AF amplifier (IC806), and fed to the speaker or the external speaker jack.

The VHF or UHF audio signal selected by the cross point switch, passes through the filter circuit (IC701) and goes to the CPU (IC604) for CTCSS and DCS decoding. The signal buffered by Q701 is output to the PR1 terminal of the DATA connector, and the signal buffered by Q700 is output to the PR9 terminal. The 1200bps and 9600bps packet signals pass through CN600 from the cross point switch, go to the TNC unit (X52-331). They are used for the TNC circuit. In the X52-331 unit, the 1200bps packet signal is amplified by the AF amplifier (IC7), passes through the audio filter (Q5), and is rectified to a rectangular wave by the comparator (IC4). Then, the reshaped signal goes to the TNC ASIC (IC2). It passes through the filter (Q4, Q7) and the comparator (IC6). Then it goes back to IC2. Then it is converted to digital data and output to the COM terminal at the TNC CPU (IC3). The 9600bps packet signal is amplified by the AF amplifier (IC7), passes through the audio filter (Q6). It is reshaped to a rectangular wave by the comparator (IC4). Then it goes to the TNC ASIC (IC2), converts to digital data and output to the COM terminal at TNC CPU (IC3).

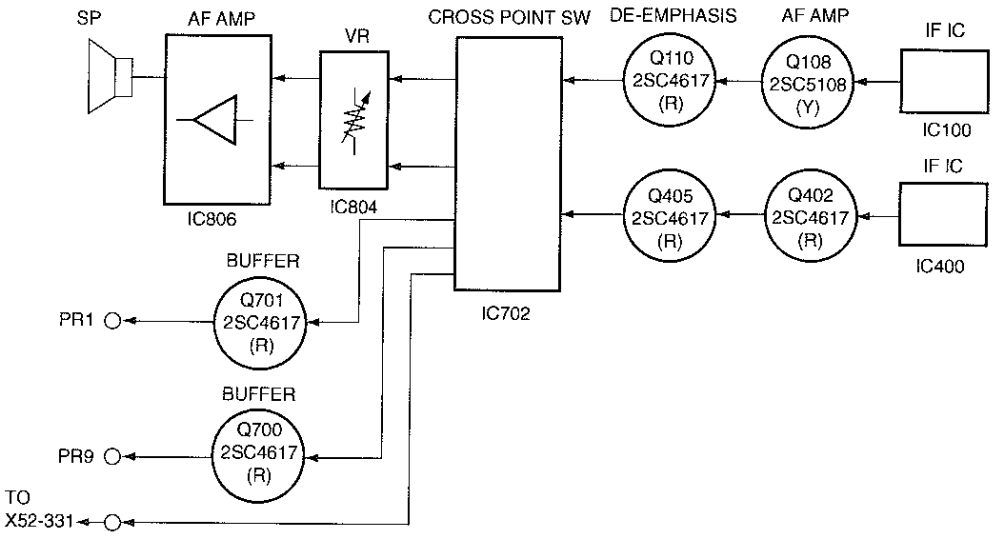

Fig.6 Audio circuit

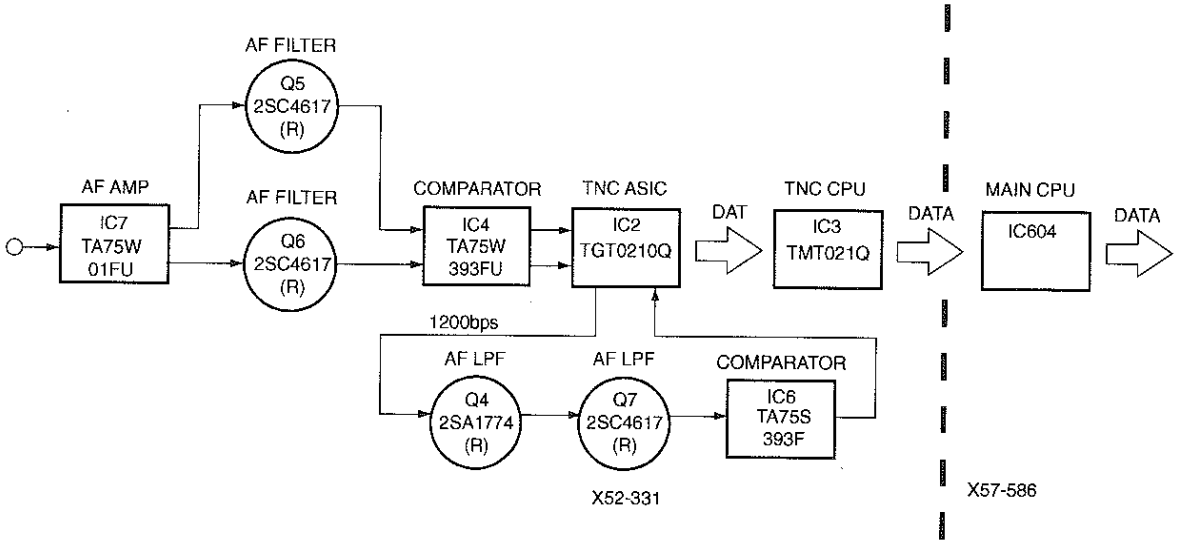

Fig.7 TNC unit circuit

CIRCUIT DESCRIPTION

※ RAV and RAU is de-emphasized audio signal. RDV and RDU is not de-emphasized.

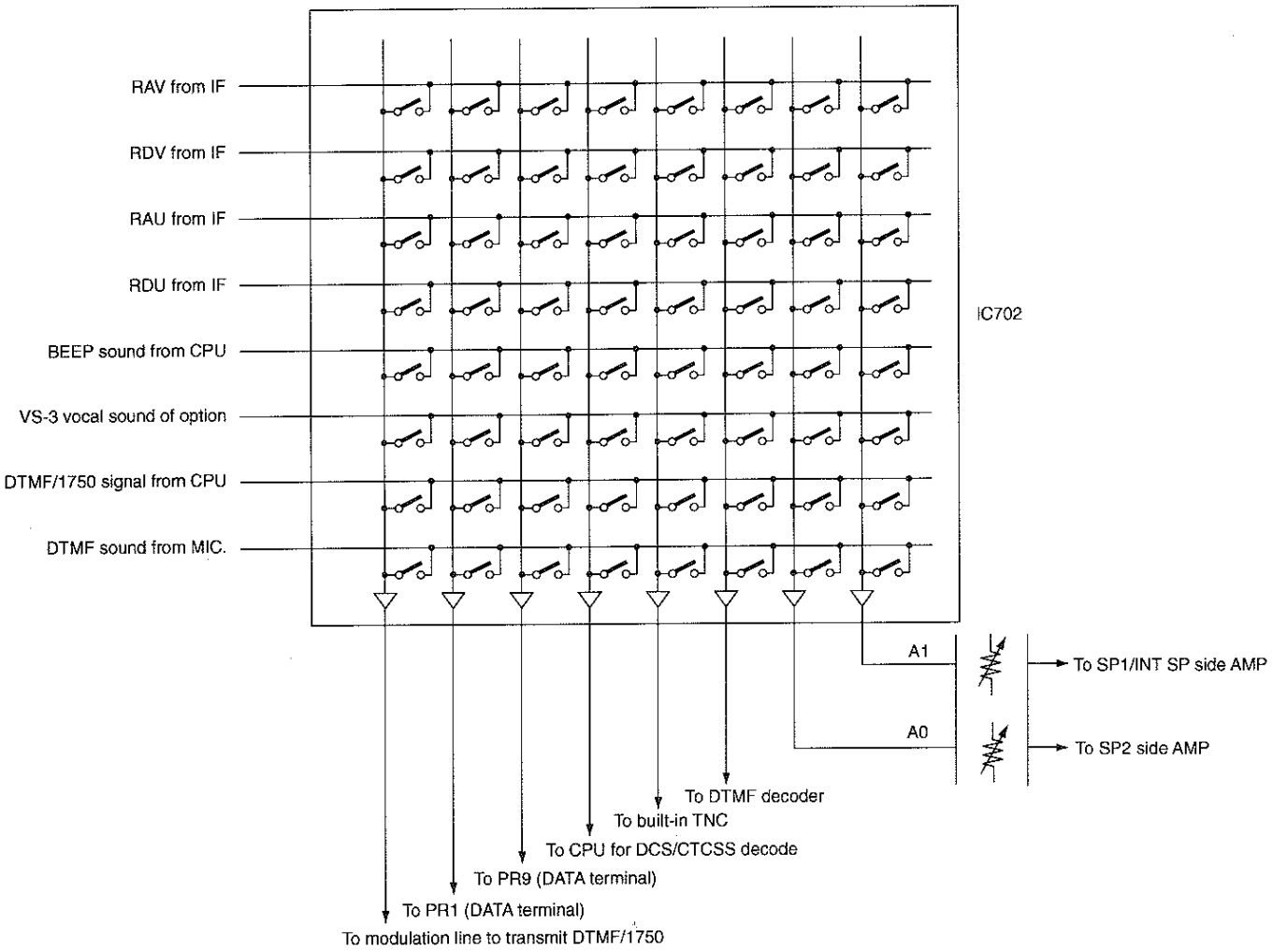

Fig.8 Cross point switch (Audio switching circuit)

CIRCUIT DESCRIPTION

3. Transmitter system

3-1. Modulation Circuit

The audio modulation input from the microphone is amplified by IC801. The 1200bps packet signal generated by the X52-331 goes to IC801. The DTMF signal and 1750Hz tone signal (E type only) generated by the CPU are also mixed by IC801. The modulation signal from the DATA terminal is switched by IC803. It is directed to IC801 in 1200bps mode and to IC802 in 9600bps mode. The signal amplified by IC801 is pre-emphasized by Q801 and Q802, and its level is adjusted by IC804, and the resulting signal goes to each of the VHF and UHF VCOs as a modulation signal. The TONE/CTCSS/DCS signal generated by the CPU is fed to IC802 in the same way as the 9600bps mode signal from the DATA terminal. The signal amplified by IC802 is distributed and the level is adjusted. The modulating signal goes to each of the VHF and UHF VCOs. The signal is amplified by IC300 and modulates the reference oscillation circuit.

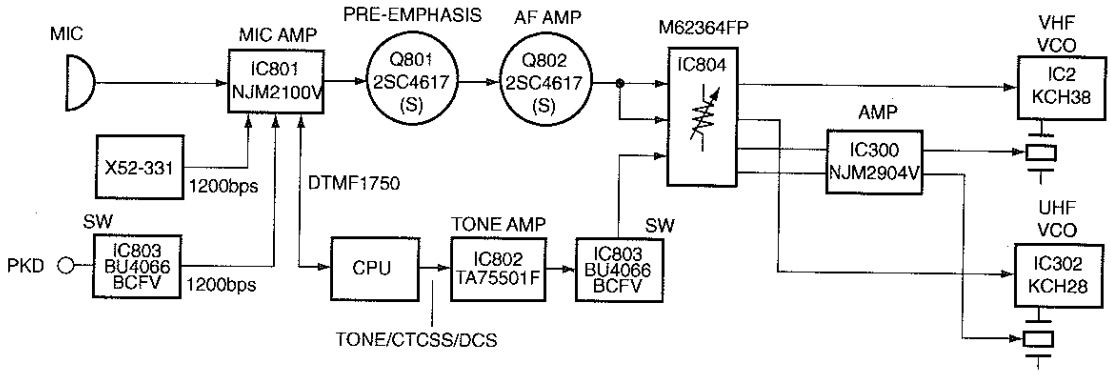

Fig.9 Modulation curcuit

3-2. Transmitter circuit

The VHF VCO output is amplified by 3-stage amplifier, RF amplifier (Q6) and driver amplifier (Q8, Q9). It is amplified to the final output by the power module. The signal passes through antenna switch (D14, D15) and low-pass filter and is fed to the antenna.

The UHF VCO output is amplified by 4-stage amplifier, RF amplifier (Q304) and driver amplifier (Q307, Q309, and Q310). It is further amplified to the final output by the power module. The signal passes through antenna switch (D314), low-pass filter and high-pass filter. Then it is fed to the antenna.

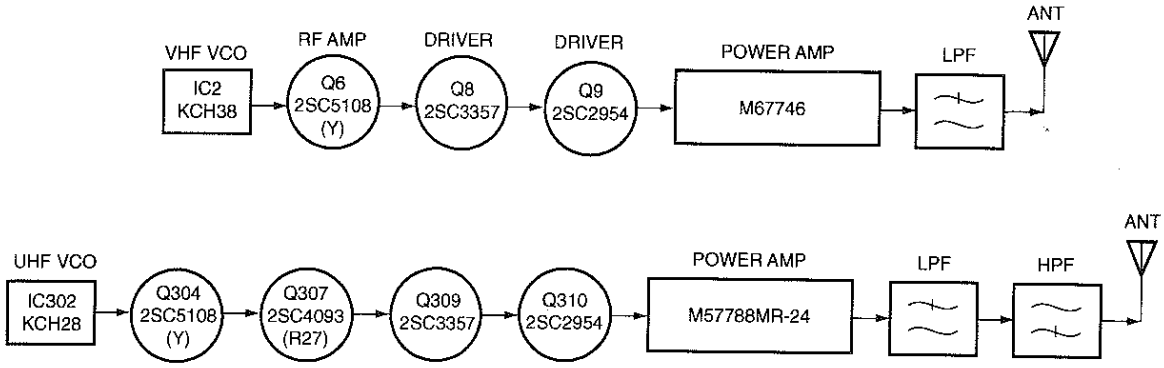

Fig.10 Transmitter curcuit

CIRCUIT DESCRIPTION

3-3.APC circuit

The Automatic transmission Power Control(APC) circuit has a differential amplifier (IC200) that compares the DC voltage generated by detecting part of the transmission output using diodes (VHF: D18, D19; UHF: D317, D318) with the reference voltage output from the CPU. The output signal is amplified by Q209 and Q208 and fed to the power module to keep transmission output constant.

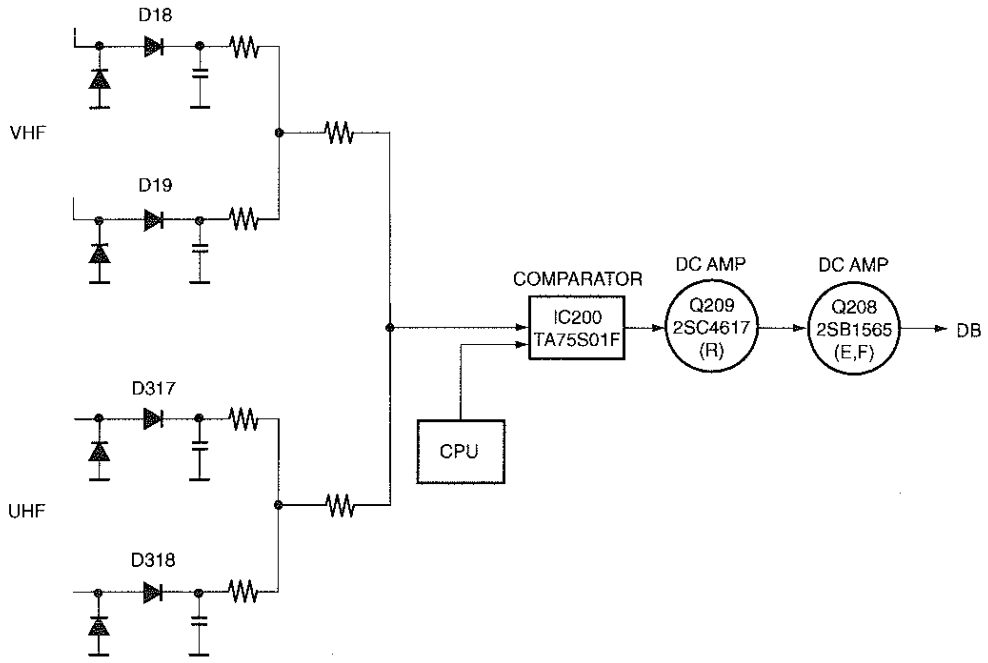

Fig.11 APC circuit

3-4.Overheating protection circuit

To protect from the thermal destruction of the power module, the voltage of the thermistor (TH1) near the power module is monitored by the CPU (IC604). If it becomes high temperature, the APC voltage is controlled to cool down the temperature.

CIRCUIT DESCRIPTION

4. PLL circuit

4-1.Reference oscillator circuit

The 12.8MHz signal is generated by the crystal oscillator circuit (IC1 and IC301) and internally divided to generate 5kHz or 6.25kHz reference frequency. The 12.8MHz signal on IC1 side is tripled by Q102 to obtain the second local oscillator for the A band. The reference oscillation circuit is also modulated to improve the modulation characteristics of the DCS and 9600bps packet signal when it is transmitted.

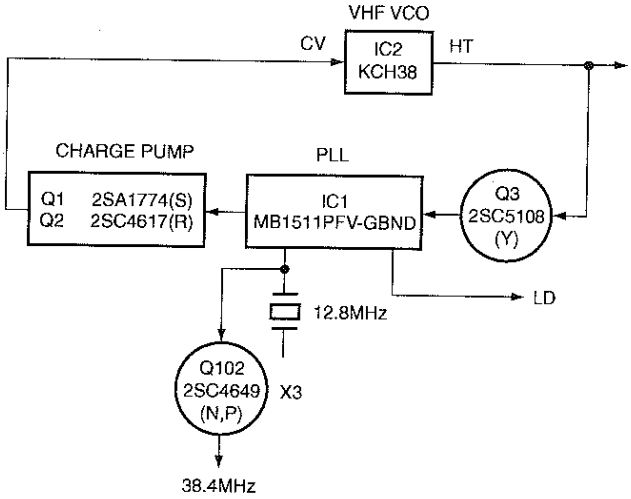

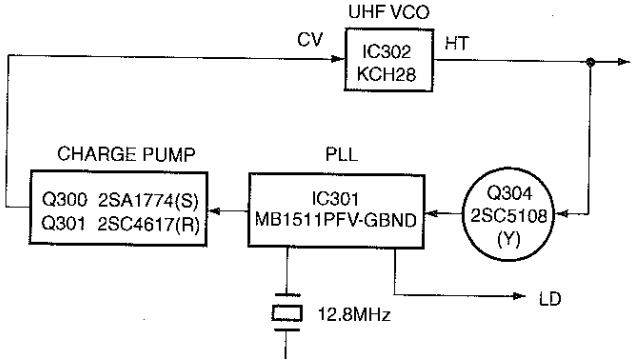

Fig.12 PLL curcuit

4-2.Phase comparator

Part of the VHF VCO output is amplified by Q3 and goes to VHF PLL IC. Also, a part of the UHF VCO output is amplified by Q302 and goes to the UHF PLL IC. The pulse-swallow type PLL IC divides the input VCO oscillator frequency using the data from the CPU (IC604). It compares its phase with that of the reference frequency to make the PLL synthesizer to generate the desired step.

4-3.Lock voltage (VCO control voltage)

The phase differencial comparator, output from the PLL IC, results in a phase difference pulse. This pulse is amplified by a charge pump (Q1, Q2 or Q300, Q301), the ripples are removed by a low-pass filter .Then the signal is supplied as the oscillator frequency control voltage for each VCO.

4-4.Unlock detection circuit

When the PLL is unlocked, a low state voltage is outputed from pin 8 of the PLL IC.
This signal is monitored by the CPU (IC604) to control transmission/reception switching timing.

5. Power supply circuit

5-1.Microcomputers and peripheral circuits

Reset and backup circuits

The CPU reset signal is generated by detecting a rising edge of the M5C line voltage with the reset IC (IC601). The TNC reset pulse is generated by Q3 at a rising edge of VDD. When the voltage supplied to the transceiver decreases and the B line voltage falls below the detection voltage of the voltage detection circuit (Q604, D604), the CPU (IC604) detects it through the interrupt pin, stores data in the EEPROM (IC602), and shuts the power off.

5-2.Voltage detection processing

The CPU (IC604) monitors and process various voltage status at IC604 A/D ports.

The squelch voltage is input from the IF IC and a change in the noise voltage is detected to control squelch. The S meter voltage is input from the IF IC to control the S meter display. The thermistor voltage (temperature) and the remote control microphone key operation are also detected through the A/D port.

CIRCUIT DESCRIPTION

5-3.Serial control

The CPU (IC604) controls the panel unit (X54-329 unit) through a synchronous serial communication. The CPU (IC604) controls the TNC CPU (IC3: X52-331 unit) through 9600bps serial communication. In APRS mode, settings and transmission data are sent from the CPU (IC604) to the TNC and received packet data is sent from the TNC to the CPU (IC604). In the packet transmission mode, a personal computer is connected with the CPU (IC604)through the RS-232C driver (IC600). The data from the personal computer is received by the CPU (IC604) and transferred to the TNC CPU(IC3). The received packet data is sent from the TNC CPU(IC3) to the main CPU(IC604), which transfers the raw data to the personal computer. In the personal computer control mode, the CPU(IC604) receives and processes data from the personal computer and sends the processed data back to the personal computer.

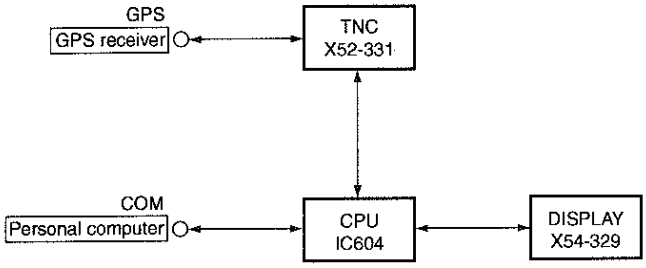

Fig.13 Structure of non-synchronized serial communication

5-4.Narrow/Wide switching circuit (TM-D700E only)

The receiver band width can be switched between narrow and wide by selecting IF ceramic filters, CF100 (narrow) and CF101 (wide) on the A band with a switching circuit(Q100, Q101, D100, D101). On the B band, the receiver band width can be also switched between narrow and wide by selecting IF ceramic filter CF400 (narrow) and CF401 (wide) with a switching circuit (Q400, Q401, D400, D401).

The transmitter deviation can be switched between narrow and wide by setting the electronic variable resistor (IC804) on the deviation adjustment point. It is controlled from the CPU (IC604).

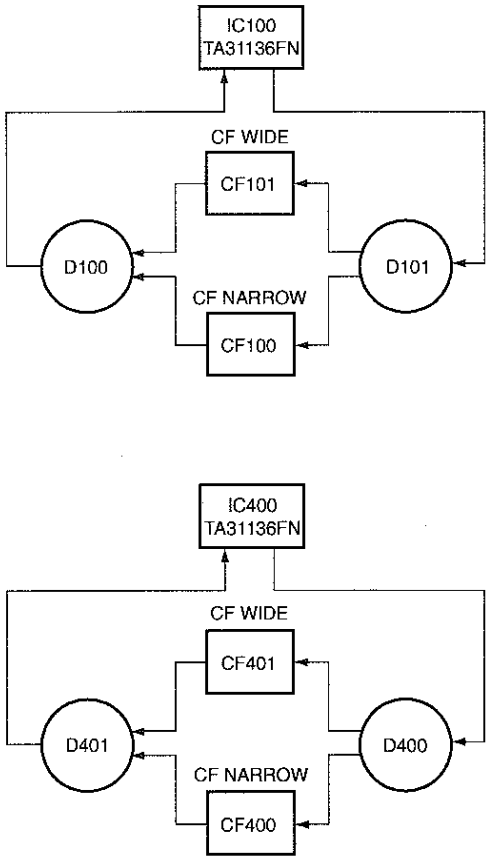

Fig.14 Narrow/Wide Switching circuit

CIRCUIT DESCRIPTION

6. AF Signal System

6-1. Beep circuit and mute circuit

A beep sound is generated by the CPU (IC604) and goes to cross point switch (IC702).

This signal is switched by the cross point switch (IC702) and are input to the electronic volume (IC804). While the beep signal is output from the microprocessor, audio signals for each band are muted by the cross point switch (IC702) with the serial data from the microprocessor (IC604).

The signals output from the electronic volume (IC804) are input to the speaker switching circuit and go through the audio mute circuit (Q804 and Q805). Then it is input to the power amp (IC806).

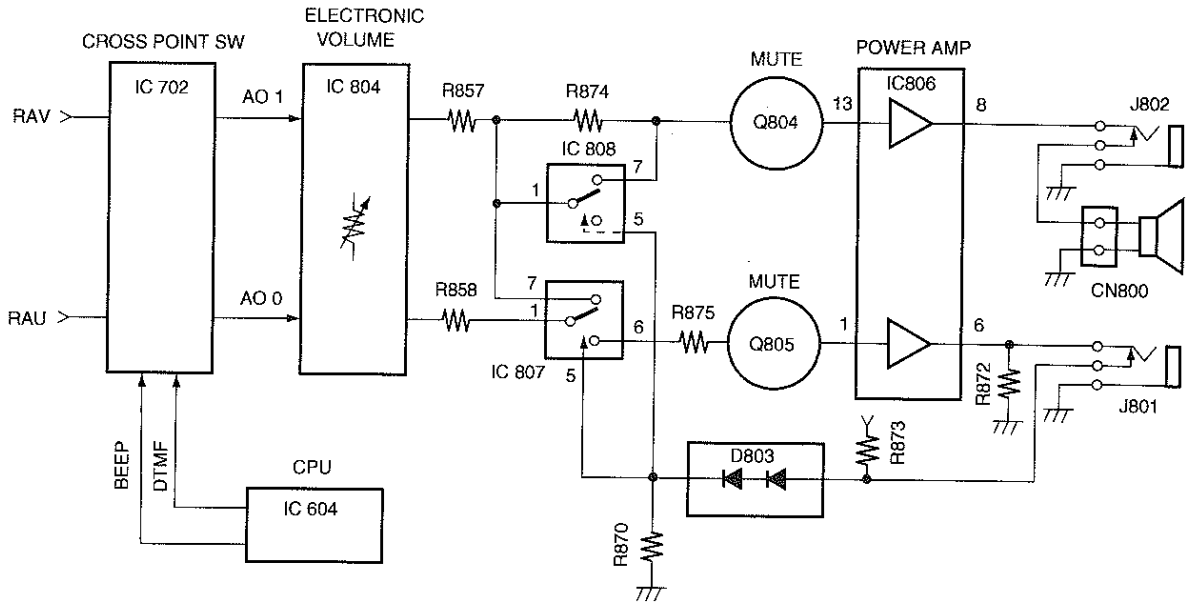

Fig.15 Beep circuit and mute circuit

CIRCUIT DESCRIPTION

6-2. Speaker Switching Circuit

There are two speaker jacks, J801 and J802. The AF signals can be output in various combinations matching the internal speakers.

When no external speaker is connected to J801, Pins 5 of the multiplexer (IC807, IC808) go low, the AF signals AO 0 and AO 1 are added and input to the power amp (IC806).

When an external speaker is connected to J801, Pins 5 of the multiplexer (IC18) go high and AO 0 and AO 1 are input separately to the power amp.

The AF signal output combinations are as in the speaker combination table on the below.

	AO 1	AO 0
Internal speakers only	Internal speaker	
1 external speaker (J802)	external speaker	
1 external speaker (J801)	Internal speaker	external speaker
2 external speaker	external speaker	external speaker

Table7 Speaker combination table

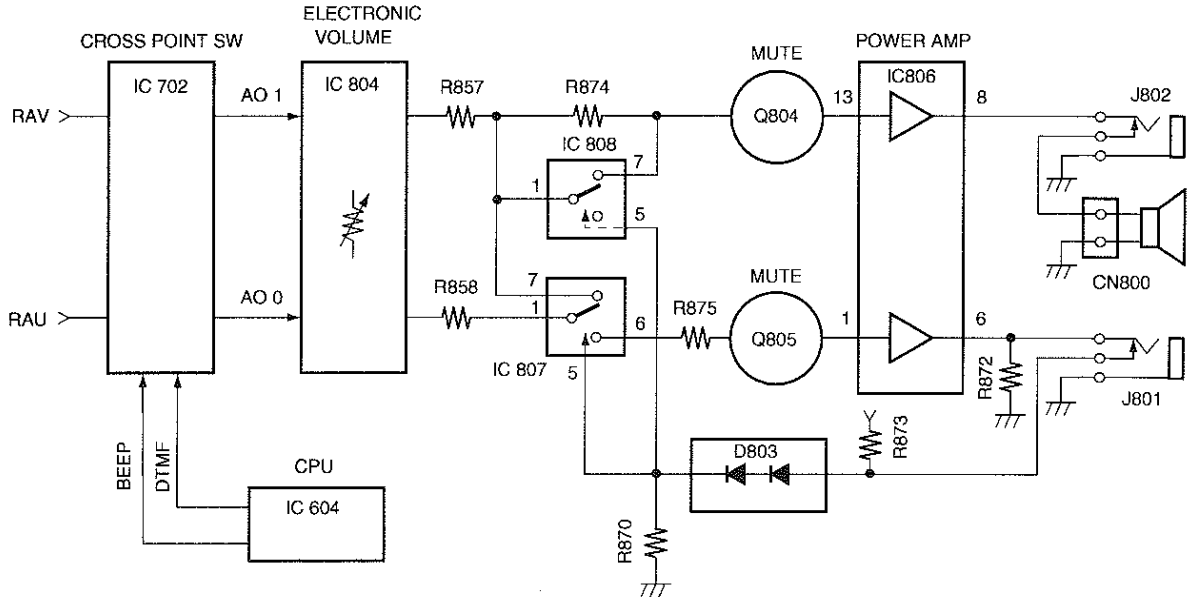

Fig.16 Speaker switching circuit

6-3. Microphone Key Input

The microphone UP/DOWN and function keys are connected to the microprocessor analog input. The voltage when a key is ON operates the corresponding function. Also, the key input interrupt circuit is for switching the power ON/OFF with the microphone. When the DOWN, MR, and PF keys are pressed, an interrupt is generated and the microprocessor is awoken from stop mode. However, with the TM-D700A/E, the power ON/OFF switch function can be registered to the PF key on the microphone.

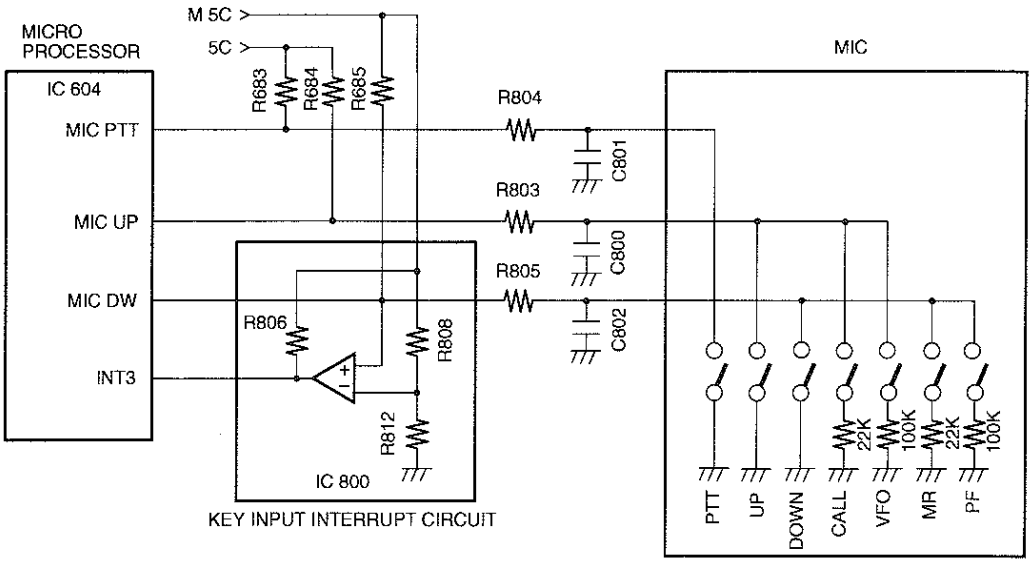

Fig.17 Microphone key input circuit

CIRCUIT DESCRIPTION

7. Data Terminal and Peripheral Circuits

J700 (data terminal) is the data communications terminal on the front. It handles transmission control, data input/output, and squelch signals.

There are two data communications modes: 9600bps mode and 1200bps mode. 9600bps mode communications are FAST FM mode of SSTV, GMSK and G3RUH packet communications. Unlike with 1200bps AFSK, with this type of high-speed modulation, frequency modulation is carried out after the digital base band signals (rectangular wave) are passed through a band limiting filter. For 9600bps GMSK for example, compared to 4800Hz signals (nearly sine wave signals passed through a filter), these signals have a hissing sound like digital modulation when listened to by ear. Different types of modulation, such as GMSK and G3RUH, are distinguished by the type of band limiting filter.

Pin No.	Pin name	Specification		
1	PKD	bps switching	1200bps	9600bps
		Modulation input	40mVp-p	2Vp-p
		Frequency shift	3±0.5kHz	2.2±0.5kHz
4	PR9	Output level 500mVp-p/10kΩ Always output during reception		
5	PR1	Output level 500mVp-p/10kΩ Not output when squelch off		

Table8 DATA terminal input/output level

7-1. Transmission signals

Transmission modulation signals enter from PKD of the data terminals (J700). The path to the modulation depends on whether communications are 1200bps or 9600bps mode.

For 1200bps mode, the transmission modulation signals pass through the analog switch (IC803), and are input to IC801 (Pin 6). The signals pass through the pre-emphasis (Q801, Q802), are adjusted by the electronic volume, and are input to the VCO.

For 9600bps mode, the transmission modulation signals pass through IC803 and amplified by the tone amp (IC802). Then it is adjusted by the electronic volume, and are input to the VCO.

The frequency shift depends on the input signal level, so there is an amplitude limiting circuit (D702, D703) to hold the signal below 4 Vp-p to avoid extreme shifts.
Thanks to this circuit, the PKD signal does not go above 4 Vp-p and the frequency shift does not fluctuate extremely.

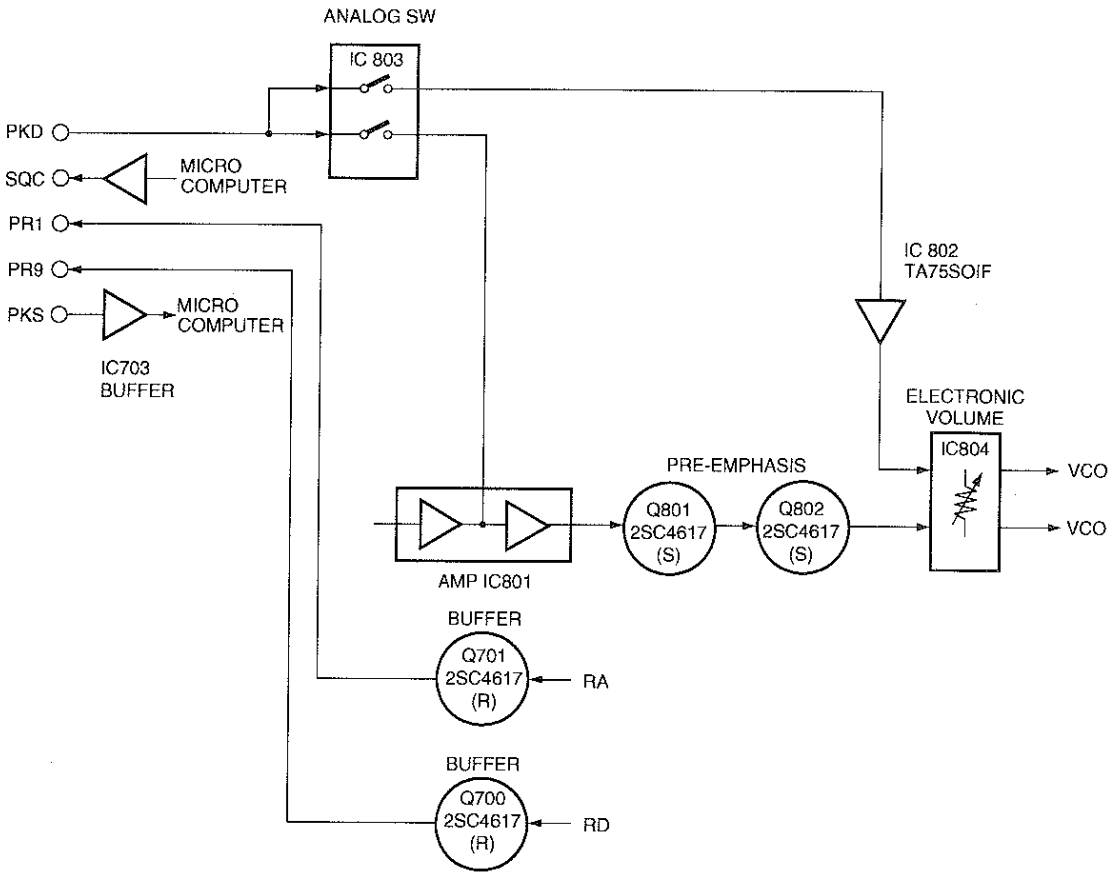

Fig.18 Transmission signals

7-2. Reception signals

PR9 is the 9600bps data communications reception output. It outputs the FM detection circuit output (RD signals) through a buffer amp (Q700). These signals are always output whether the squelch is open or closed.

PR1 is the 1200bps data communications reception output. It outputs the FM detection circuit output (RA signals) through a buffer amp (Q701). Output is controlled with the cross point switch (IC702) according to whether squelch is open or closed.

7-3. Squelch signal output circuit

The squelch circuits is input to the TNC to prevents conflicts from occurring between simultaneous receive mode and transmit mode traffic during packet communications. (only during 1200bps) The signal is output from Pin 15 of IC703 to the data terminal. The logic is as shown in the Table below.

SQC terminal output (J700 Pin 6)	L : SQ CLOSE H : SQ BUSY

8. Panel Section (LCD ASSY: B38-0829-05)

The panel section controls serial communications with the main unit control section, the key input circuit, the display circuit, and the dimmer circuit through the microprocessor (IC4).

8-1. Serial communications circuit

A buffer amp is inserted in order to protect the microprocessor ports.

8-2. Key, Volume input circuit

Circuits to operate the panel section keys are connected to each microprocessor port. The PSW key is pulled up and the other keys are pulled up with software within the microprocessor. Rotary encoder operating circuits are connected directly to the microprocessor. The control divides the power supply voltage, reads the A/D port of the microprocessor, and transfers that data to the main unit.

8-3. Display circuit

The TM-D700A/E display section is a 188x54-dot full-dot matrix LCD controlled by two LCD. As shown is Figure 19, the master IC (IC2) side is connected to 22 common dots and 88 segment dots and the slave IC (IC1) side is connected to 33 common dots and 100 segment dots. The LCD drive voltage is obtained by raising the power supply voltage (5V) within the IC.

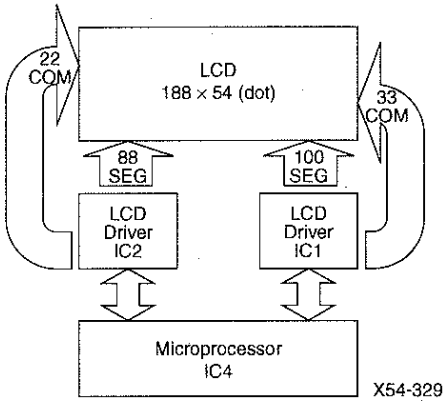

Fig.19 Display circuit

8-4. Dimmer circuit

The dimmer circuit switches the lamp brightness to one of four levels or OFF. (See table) The current flowing to the LEDs is varied by selecting resistors from R8 to R14.

Dimmer level	DIM 0	DIM 1	DIM 2	DIM 3
1	H	L	L	L
2	L	H	L	L
3	L	L	H	L
4	L	L	L	H
OFF	L	L	L	L

Table9 Port logic

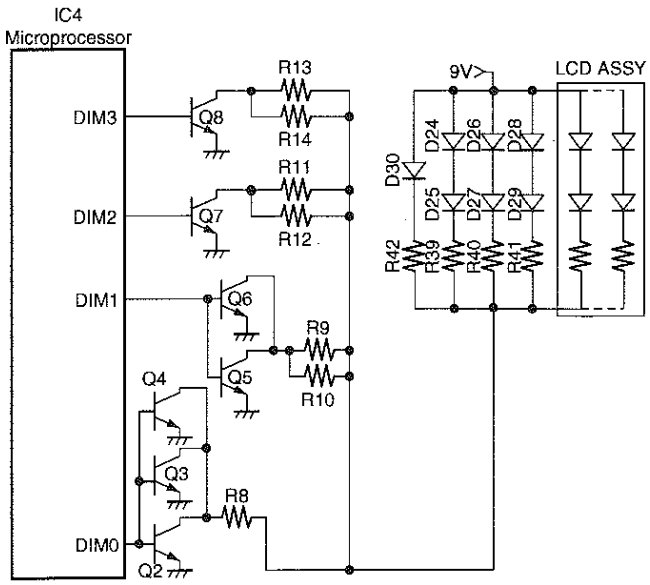

Fig.20 Dimmer circuit

SEMICONDUCTOR DATA

30622M8759GP (PANEL UNIT CPU : IC4)

Pin No.	Port Name	I/O	Function	Active Level
1	KYCALL	I	[CALL] key input	L
2	KYVFO	I	[VFO] key input	L
3	KYMR	I	[MR] key input	L
4	KYPM	I	[PM] key input	L
5	KYMNU	I	[MENU] key input	L
6	BYTE	I	Select 8-bit data bus (5C)	
7	CNVSS	I	Select memory expansion mode	
8	FUNC	I	[F1] key input	L
9	KYF1	I	[F2] key input	L
10	RESET	I	Reset	
11	XOUT	O	Clock output	
12	VSS	-	GND	
13	XIN	I	Clock input	
14	VCC	-	Power input	
15	NMI	(I)	Not used	
16	INT2	I	Interrupt from serial input port	
17	INT1	I	Encoder pulse 1 input	
18	INT0	I	Encoder pulse 2 input	
19	KYF2	I	[F3] key input	L
20	KYF3	I	[F4] key input	L
21	NC	I	Not used (VCC)	
22	NC	I	Not used (VCC)	
23-26	DIM3-0	O	Dimmer output	
27	PSW	O	Power SW control output	
28	BS	O	Beat shift output	
29	NC	I	Not used (VCC)	
30	NC	I	Not used (VCC)	
31	KYF4	I	[F5] key input	L
32	KYF5	I	[F6] key input	L
33	TXD0	O	Serial port for connecting to TX-RX uint	
34	RXD0	I	Serial port for connecting to TX-RX uint	
35	NC	I	Not used (VCC)	

Pin No.	Port Name	I/O	Function	Active Level
36	NC	I	Not used (VCC)	
37-41	NC	I	Not used	
42	RD	-	Read signal	
43	NC	-	Not used	
44	WR	-	Write signal	
45	LCDA0	O	LCD Address 0	
46	LCDCD2	O	LCD chip select 2	
47	LCDCD1	O	LCD chip select 1	
48	CS0	-	Flash ROM chip select signal	
49	A19	-	Not used (Open)	
50-59	A18-9	-	Address bus 18-9	
60	VCC	-	Power input	
61	A8	-	Address bus 8	
62	VSS	-	GND	
63-70	A7-0	-	Address bus 7-0	
71-78	LCDD7-0	I/O	LCD data bus 7-0	
79-86	D7-0	-	Data bus 7-0	
87	LCDRD	O	LCD read terminal	
88	LCDWR	O	LCD write terminal	
89	LCDRES	O	LCD reset	
90	PWR	I	[POWER] key input (key interrupt)	L
91	B-AFVR	I	B band R AF VOL (A/D)	
92	B-SQVR	I	B band R SQ VOL (A/D)	
93	A-AFVR	I	A band L AF VOL (A/D)	
94	AVSS	-	Analog power input (GND)	
95	A-SQVR	I	A band L. SQ VOL (A/D)	
96	VREF	-	A/D reference voltage input	
97	AVCC	-	Analog power input (5C)	
98	MHz	I	[MHz] key input	L
99	B_KEY	I	[B BAND SEL] key input	L
100	A_KEY	I	[A BAND SEL] key input	L

SEMICONDUCTOR DATA

78F4218GCJVYC : K
78F4218GCJVZC : E, M4 (TX-RX UNIT CPU : IC604)

Pin No.	Port Name	I/O	Function		Active Level
1	UPLLEN	O	U PLL Enable output	MB1511PFV	
2	VPLLEN	O	V PLL Enable output	MB1511PFV	
3	PSW1	O	Transceiver main power switch (SBSW)	H:ON	
4	PSW2	O	Transceiver main power switch (CPU)	L:ON	
5	MIC MUTE1	O	MIC MUTE 1 (MIC input)	H:Mute	H
6	MIC MUTE2	O	MIC MUTE 2 (SPF out)	H:Mute	H
7	RST SW	I	Hard reset switch	Normal:L	
8	SHIFT	O	Clock shift	Normal:L	
9	VDD	-	Positive power		—
10	X2	O	System clock	11.0592MHz	—
11	X1	I	System clock		—
12	VSS	-	GROUND		—
13	XT2	-	OPEN		—
14	XT1	-	Connect to VSS		—
15	RESET	I	System reset	H:Reset	H
16	BACKUP	I	Power voltage fall detection interrupt	H:Back up mode	H
17	CTS2	I	UART control signal input from PC pin		H
18	START	I	H: Trigger S5C turns on for a certain time		H
19	RXD3(INT)	I	UART control signal input from THC		
20	SIS	I	UART control signal input from STN panel		H
21	MUTE5	O	DTMF/1750Hz mute output	H:Mute	
22	MIC PWR	I	Remote control keys DOWN, MR, PF, power switch		L
23	AVDD	-	Connect to VDD		—
24	AVREF	-	Connect to VDD		—
25	THP	I	Temperature protection		—
26	SQ14	I	Noise level A/D input (VHF IF)		—
27	SW14	I	S meter level A/D input (VHF IF)		—
28	SQ43	I	Noise level A/D input (UHF IF)		—
29	SM43	I	S meter level A/D input (UHF IF)		—
30	P_DWAN	I	Remote control key A/D input UP, CALL, VFO		—
31	P_UPAN	I	Remote control key A/D input DOWN, MR, PF		—
32	TOIN	I	CTCSS, DCS input		
33	AVSS	-	Connect to VSS		—
34	1750/DTMF	O	BEEP/DTMF sound, 1750Hz tone, D/A output		
35	TONE	O	D/A output for SUB TONE		
36	AVREF	-	Connect to VDD		—
37	RxD2	I	UART data input from PC pin		L
38	TxD2	O	UART data output to PC pin		L
39	RTS2	O	UART control signal output to PC pin		—
40	RxD1	I	Panel UART data input		L
41	TxD1	O	UART data output to panel		L
42	TNCS	I	TNC installation judgment	L:installation	
43	TNCPLL	I	TNC PLL lock signal		H
44	STS	O	Level converter power switch	L:ON	H
45	Rxd3	I	UART data input from TNC		
46	NC	I	—		—
47	NC	I	—		—
48	STALED	I	Packet transmission storage detection	L: Storage	L
49	GPSLED	I	GPS receiver receive state	L: No measurement; H/L: Measurement	H
50	PKSD	I	Transmission request DATA-PKS	L:Send from DATA	L
51	SQC1	O	DATA-SQC squelch signal output	H:Open	H
52	CONLED	I	Packet transmission connect detection	L:Connect	L
53	SQC2	O	INT, TNC, SQC squelch signal output		H
54	TNC9600	I	TNC speed	H:9600 L:1200	
55	CTS3	I	UART transmission inhibition signal input from TNC	H:Transmission control	
56	PKSI	I	Internal TNC transmission request	H:Transmission	
57	MBLED	I	Message board	L:Connect	
58	MALED	I	Message to local station		
59	SW_TNC	O	TNC power control	L:ON	
60-63	SIM0-3	I	Destination judgment bit 0-3		
64	CH	I	Destination, channel display mode		L
65	PTT	I	[PTT] key input	L:Push down	L

SEMICONDUCTOR DATA

78F4218GCJVYC : K
78F4218GCJVZC : E, M4 (TX-RX UNIT CPU : IC604)

Pin No.	Port Name	I/O	Function		Active Level
66	REPTR	I			L
67	CLK	O	Common clock (XSW, 2099, E2P, DAC, VPLL, UPLL, RTC)		
68	DATA	O	Common data (XSW, 2099, E2PSI, DAC, VPLL, UPLL)		
69	XSW_LD	O	Cross Point SW. LOAD		
70	2099LCK1	O	2099 LCK		
71	2099LCK2	O	2099 LCK		
72	VSS	-	GND		—
73	DTMFCK	O	DTMF CLOCK	LC73881M	
74	DTMFDT	I	DTMF DATA		
75	DTMFDET	I	Data detection		
76	VS3NAR	O	VS-3 NAR		
77	VS3RST	O	VS-3 RESET		
78	VS3CS	O	VS-3 Chip Select		
79	VS3DT	O	VS-3 DATA		
80	VS3CK	O	VS-3 CLK		
81	VDD	-	Positive power		—
82	RTCE	O	RTC Chip Select	RS5C321A	
83	RTCSIO	I/O	RTC data input/output		
84	DA_EN	O	DAC Enable output	M62364FP	
85	NC				
86	TxD3	O	UART data output to TNC		
87	BEEP	O	Beep sound output		
88	NC				
89	RTS3	O	UART Transmission inhibition signal output to TNC	H:Transmission control	—
90	E12	O			
91	E96	O			
92	I12	O			
93	I96	O			
94	VPP	I	Flash writing 10V application pin	Normal:L	pulse
95	NC				
96	E2SO	I	Data input line for EEPROM (EEPROM SO pin)		
97	E2CS	O	EEPROM Chip Select	L:Enable	
98	SU43	O	UHF PLL speedup control output	(H:ON)	
99	VPLLUL	I	V UNLOCK detection	H:Lock	H
100	UPLLUL	I	U UNLOCK detection	H:Lock	H

TM-D700A/E

DESCRIPTION OF COMPONENTS

TX-RX UNIT (X57-586X-XX)

Ref No.	Application/Function	Operation/Condition/Compatibility
IC1	PLL IC	VHF PLL
IC2	VCO	VHF
IC3	Power Module	VHF (Main Body)
IC4	Power Module	UHF (Main Body)
IC100	IF IC	A band
IC101	AF select	VHF
IC200	APC voltage comparison	VHF
IC300	Modulation signal amplification	VHF
IC301	PLL IC	UHF PLL
IC302	VCO	UHF
IC303	Prescaler	UHF
IC304	Speed up switch	
IC400	IF IC	B band
IC501	AF PA	
IC600	RS-232C driver	
IC601	Reset	
IC602	EEPROM	Setting, memory
IC603	AVR	
IC604	Control microcomputer	
IC700	DTMF decod	
IC701	CTCSS, DCS filter	
IC702	Cross point switch	
IC703	Buffer	
IC800	Comparator	
IC801	MIC amp	
IC802	AF amp	
IC803	AF select switch	
IC804	Electronic control	
IC805	DC amp	APC, BPF
IC806	Audio amp	(Main Body)
IC807	AF switch	
IC808	Change switch	SP1/SP2
IC900	Expansion port	
IC901	Expansion port	
IC903	8V AVR	8C (Main Body)
IC904	AVR	
Q1	Charge pump	VHF
Q2	Charge pump	VHF
Q3	PLL comparison input amplifier	VHF
Q4	Ripple filter	VHF
Q6	VCO output amplifier	VHF
Q7	LO doubling circuit	VHF
Q8	Drive amplifier	VHF
Q9	Drive amplifier	VHF
Q10	Switch	
Q11	Switch	
Q100	Change switch	VHF Narrow/wide (TM-D700E ONLY)
Q101	Change switch	VHF Narrow/wide (TM-D700E ONLY)
Q102	Doubling circuit	VHF2nd LO doubling circuit
Q103	Power switch	R5V
Q104	Power switch	R5AM
Q105	IF amp	VHF
Q106	IF amp	VHF
Q107	IF amp	VHF
Q108	AF amp	VHF
Q110	AF amp	VHF
Q111	AGC amp	VHF
Q112	IF amp	VHF
Q113	AGC	
Q200	1st Mixer	VHF
Q201	1st Mixer	VHF
Q202	RF amp	VHF

Ref No.	Application/Function	Operation/Condition/Compatibility
Q203	RF amp	VHF
Q204	Change switch	VHF
Q205	RF amp	VHF
Q207	AGC control	VHF
Q208	APC control	VHF/UHF
Q209	APC control	VHF/UHF
Q210	RF amp	VHF
Q300	Charge pump	UHF
Q301	Charge pump	UHF
Q302	PLL comparison input amplifier	UHF
Q303	Ripple filter	UHF
Q304	VCO output amplifier	UHF
Q305	Doubling circuit	UHF LO
Q306	Power switch	UHF Prescaler
Q307	Drive amplifier	UHF
Q308	LO amp	UHF
Q309	Drive amplifier	UHF
Q310	Drive amplifier	UHF
Q400	Change switch	UHF Narrow/wide (TM-D700E ONLY)
Q401	Change switch	UHF Narrow/wide (TM-D700E ONLY)
Q402	AF amp	UHF
Q404	Power switch	R5U
Q405	AF amp	
Q406	IF amp	
Q500	IF amp	
Q501	1st Mixer	UHF
Q502	1st Mixer	UHF
Q503	Mixer	UHF
Q505	RF amp	UHF
Q506	RF amp	UHF
Q507	RF amp	UHF
Q508	RF amp	UHF
Q509	RF amp	UHF
Q600	Power switch	STS
Q601	Reset switch	
Q603	Power switch	SM5C
Q604	System down detection	
Q700	AF amp	PR9
Q701	AF amp	PR1
Q702	Reset switch	
Q800	Microphone mute	
Q801	Preemphasis	
Q802	Preemphasis	
Q803	Microphone mute	
Q804	Mute	
Q805	Mute	
Q807	Mute	
Q900	Fan switch	
Q903	Power switch	T8V
Q904	Power switch	T8U
Q905	Power switch	R8V, R8U
Q906	Power switch	RM43, RM80
Q907	Power switch	RS14, RM30
Q908	Power switch	R8UA, RM22
Q909	Power switch	RS43, RM14
Q910	AVR	PB
Q911	AVR	PB
Q912	Power switch	SB
Q913	Power switch	PB
Q914	Power switch	SB
Q915	Power switch	SBA
Q916	Power switch	SBA

DESCRIPTION OF COMPONENTS

Ref No.	Application/Function	Operation/Condition/Compatibility
D1	Reference oscillation circuit modulation	A band
D2	Reference oscillation circuit modulation	A band
D3	LD waveform rectification	A band
D4	Step-down	Charge pump
D5	Quick charge	A band VCO ripple filter
D6	OR circuit	RM14/RM22
D7	LO switch	LO Doubling circuit switch
D9	LO switch	LO Doubling circuit switch
D11	Signal switch	VHF TX
D12	Drive circuit bias	
D13	Drive circuit bias	
D14	ANT switch	VHF TX
D15	ANT switch	VHF TX
D16	ANT switch	VHF TX
D17	ANT switch	VHF TX
D18	Transmission output detection	VHF
D19	Transmission output detection	VHF
D100	Change switch	VHF Narrow/wide (TM-D700E ONLY)
D101	Change switch	VHF Narrow/wide (TM-D700E ONLY)
D102	AGC	
D200	RF switch	VHF
D201	RF switch	SUB UHF
D202	Helical tuning	VHF
D203	Filter tuning	SUB UHF
D204	RF switch	
D205	Helical tuning	VHF
D206	Helical tuning	VHF
D207	RF switch	VHF
D208	RF switch	
D209	RF switch	SUB UHF
D210	Over-voltage prevention	VHF
D211	Over-voltage prevention	VHF
D213	Voltage OR	RM14/RS14
D214	Voltage OR	RM14/RS14
D216	Band pass tuning	VHF filter
D217	OR circuit	RM22
D300	Reference oscillation circuit modulation	B band
D301	Reference oscillation circuit modulation	B band
D302	LD waveform rectification	B band
D303	Step-down	Charge pump
D304	Quick charge	B band VCO ripple filter
D305	RF switch	UHF LO
D306	RF switch	UHF TX
D307	RF switch	UHF LO
D309	RF switch	UHF LO
D310	RF switch	UHF LO
D312	UHF Drive circuit bias	UHF
D313	Over-voltage prevention	
D314	TX RF switch	UHF TX
D315	Over-voltage prevention	
D316	ANT switch	UHF TX
D317	Transmission output detection	UHF
D318	Transmission output detection	UHF
D400	Change switch	UHF Narrow/wide (TM-D700E ONLY)
D401	Change switch	UHF Narrow/wide (TM-D700E ONLY)
D500	RF switch	

Ref No.	Application/Function	Operation/Condition/Compatibility
D502	RF switch	SUB VHF
D503	RF switch	UHF
D505	RF switch	UHF
D507	RF switch	SUB UHF
D509	RF switch	UHF
D510	RF switch	UHF
D600	Reverse voltage prevention	TXD voltage detection
D601	Voltage stabilization	TXD voltage detection
D602	Reverse flow prevention	Reset switch detection
D604	Voltage detection	System down detection
D605	Reverse flow prevention	M5C
D606	Reverse flow prevention	Backup battery charging
D607	Reverse flow prevention	Backup battery charging
D700	Bias	PR9
D701	Bias	PR1
D702	Over-voltage prevention	PKD
D703	Over-voltage prevention	PKD
D800	Reverse flow prevention	MIC 8V
D801	Reverse flow prevention	
D803	Voltage drop	
D900	Voltage OR	T8A
D902	Power supply reference voltage	PB
D903	Over-voltage detection	PB
D904	Reverse connection prevention	DC IN
D905	Reverse connection prevention	DC IN
TH1	Temperature detection	

PANEL UNIT (X54-3290-00)

Ref No.	Application/Function	Operation/Condition/Compatibility
IC1	Serial transmission buffer	
IC2	Serial transmission buffer	
IC3	AVR with reset function	
IC4	Control microcomputer	
IC5	ROM	
Q1	Power switch	
Q2-4,6, 7,9,10	Dimmer	
D1	Reverse flow prevention	
D2	Reset circuit	
D3-23	Over-voltage prevention (Surge elimination)	
D24-30	Key illumination	

TNC UNIT (X52-3310-00)

Ref No.	Application/Function	Operation/Condition/Compatibility
IC1	Real-time clock	
IC2	TNC ASIC	
IC3	TNC CPU	
IC4	Comparator	
IC5	SRAM IC	
IC6	Comparator	
IC7	AF amp	
IC8	RS-232C driver	
IC9	Chip select inverter	
Q1	Power switch	
Q3	Reset	
Q4	Filter	
Q5-7	AF amp	
D1,2	Reverse flow prevention	
D3	Backup battery reverse flow prevention	

TERMINAL FUNCTION

TX-RX UNIT (X57-586X-XX)

CN No.	Pin No.	Name	Function
CN600	1	M5C	Digital circuit common 5V
	2	SW TNC	TNC power control
	3	RX	TNC receive AF signal
	4	GPSTX	GPS receiver TXD
	5	GPSRX	GPS receiver RXD
	6	TXD	TNC control serial data TXD
	7	RXD	TNC control serial data RXD
	8	RTS	TNC control serial data RTS
	9	CTS	TNC control serial data CTS
	10	SQC	Squelch signal
	11	S9600	9600bps mode detection pin
	12	PKS	Transmission control
	13	MALED	Message LED pin
	14	MBLED	Message board LED pin
	15	GPSLED	GPSLED pin
	16	STLED	STALED pin
	17	COLED	CONLED pin
	18	PLLLOCK	PLL lock detection pin
	19	SHIFT	Unused
	20	T1200	1200bps transmission data
	21	T9600	9600bps transmission data
	22	GND	GND
	23	VB	Backup voltage
	24	RTCE	Real-time clock chip enable
	25	RTCK	Real-time clock
	26	RTSIO	Real-time clock serial communication
CN601	1	VCK	VS-3 clock
	2	VDT	VS-3 data
	3	VCS	VS-3 chip select
	4	RST	VS-3 reset
	5	NAR	VS-3 input enable
	6	E	GND
	7	C5	Common 5V
	8	VO	VS-3 audio
CN800	1	INT SP	Internal speaker
	2	E	GND
CN900	1		Fan power supply
	2		Fan GND

PANEL UNIT (X54-3290-00)

CN No.	Pin No.	Name	Function
CN1	1	D7	LCD driver data
	2	D6	LCD driver data
	3	D5	LCD driver data
	4	D4	LCD driver data
	5	D3	LCD driver data
	6	D2	LCD driver data
	7	D1	LCD driver data
	8	D0	LCD driver data
	9	RD	LCD driver RD
	10	WR	LCD driver WR
	11	A0	LCD driver A0
	12	GND	GND
	13	CS2	LCD driver chip select
	14	CS1	LCD driver chip select
	15	RES	LCD driver reset
	16	VDD	LCD driver VDD
	17	VL	Illumination LED control
	18	VL	Illumination LED control
	19	PB	Illumination LED power
	20	PB	Illumination LED power
CN2,CN3	1		GND
	2		VR power
	3		switch
	4		VR voltage
	5		SQL voltage

TNC UNIT (X52-3310-00)

CN No.	Pin No.	Name	Function
CN1	1	RTSIO	Real-time clock serial communication
	2	RTCK	Real-time clock
	3	RTCE	Real-time clock chip enable
	4	VB	Backup voltage
	5	GND	GND
	6	T9600	9600bps transmission data
	7	T1200	1200bps transmission data
	8	SHIFT	Unused
	9	PLLLOCK	PLL lock detection pin
	10	COLED	CONLED pin
	11	STLED	STALED pin
	12	GPSLED	GPSLED pin
	13	MBLED	Message board LED pin
	14	MALED	Message LED pin
	15	PKS	Transmission control
	16	S9600	9600bps mode detection pin
	17	SQC	Squelch signal
	18	CTS	TNC control serial data CTS
	19	RTS	TNC control serial data RTS
	20	RXD	TNC control serial data RXD
	21	TXD	TNC control serial data TXD
	22	GPSRX	GPS receiver RXD
	23	GPSTX	GPS receiver TXD
	24	RX	TNC receive AF signal
	25	SW TNC	TNC power control
	26	M5C	Digital circuit common 5V

TM-D700A/E

PARTS LIST

* New Parts. ⚠ indicates safety critical components.
Parts without **Parts No.** are not supplied.
Les articles non mentionnes dans le **Parts No.** ne sont pas fournis.
Teile ohne **Parts No.** werden nicht geliefert.

L : Scandinavia
Y : PX (Far East, Hawaii)
Y : AAFES (Europe)
K : USA
T : England
X : Australia
P : Canada
E : Europe
M : Other Areas

TM-D700A/
TNC UNIT (X52-3310-0

Ref. No.	Address	New parts	Parts No.	Description	Destination
			TM-D700A/E		
1	1B		A01-2122-13	CABINET(UPPER)	
2	3B	*	A01-2172-03	CABINET(LOWER)	
7	3A	*	A62-0775-03	PANEL(DISPLAY)	
8	2A	*	A62-0776-03	PANEL(BODY)	
9	3B	*	A82-0040-01	REAR PANEL(DISPLAY)	
10	2A		B09-0355-05	CAP	
11	3A	*	B10-2602-02	FRONT GLASS	
14	3A	*	B38-0829-05	LCD ASSY	
16			B42-2455-04	STICKER(4x8 MAX)	
19	3A		B43-1222-04	BADGE	
20			B46-0337-03	WARRANTY CARD	E
21		*	B46-0469-10	WARRANTY CARD	K
-			B59-1684-00	PAMPHLET	
22		*	B62-1228-00	INSTRUCTION MANUAL(ENGLISH)	
23		*	B62-1229-00	INSTRUCTION MANUAL(ITALIAN)	E
24		*	B62-1230-00	INSTRUCTION MANUAL(GERMAN)	E
25		*	B62-1231-00	INSTRUCTION MANUAL(SPANISH)	K, E
26		*	B62-1232-00	INSTRUCTION MANUAL(FRENCH)	K, E
27		*	B62-1233-00	INSTRUCTION MANUAL(DUTCH)	E
28		*	B62-1234-00	INSTRUCTION MANUAL(CHINESE)	M4
29		*	B62-1273-00	INSTRUCTION MANUAL(ENGLISH)	
30	3B	*	B72-1650-04	MODEL NAME PLATE	K
30	3B	*	B72-1651-04	MODEL NAME PLATE	E
30	3B	*	B72-1652-04	MODEL NAME PLATE	M4
31	1B		E04-0167-05	RF COAXIAL PECEPTACLE(M)	K, M4
31	1B		E04-0170-05	RF COAXIAL RECEPTACLE(N)	E
32			E30-2111-15	DC CORD ACSY	
33	1B		E30-2137-15	DC CORD	
			E30-3240-08	CURL CABLE	K
35		*	E30-3391-05	MODULAR CABLE	
36		*	E30-3400-05	LEAD WIRE WITH PLUG	
37	1B		E31-3197-15	LEAD WIRE WITH CONNECTOR(SP)	
38	3A	*	E37-0835-05	FLAT CABLE(DISPLAY)	
39	1A	*	E37-0840-05	FLAT CABLE(BODY)	
40	1B		F07-1429-03	COVER(FAN)	
41	2B		F10-2233-04	SHIELDING COVER(VCO)	
42	2B	*	F10-2332-12	SHIELDING COVER(POWER MODULE)	
43	1A	*	F10-2333-03	SHIELDING COVER(TNC)	
45	2B	*	F12-0460-14	CONDUCTIVE SHEET	
46	1B		F51-0017-05	FUSE(6*30 15A)	
47			F51-0018-05	FUSE(6*30 20A)	
48	1B		G02-0803-03	FLAT SPRING(AF AMP,AVR)	
49	2B		G02-0809-04	FLAT SPRING(TX-RX)	
51	2A		G10-0792-14	FIBROUS SHEET	
53	3A	*	G10-1257-04	FIBROUS SHEET	
55	1A		G11-0778-04	RUBBER CUSHION(SP)	
56	3B	*	G11-2600-14	SHEET	
57	2A	*	G11-2603-04	SHEET	
58	3A	*	G11-2611-04	SHEET	
59	3A	*	G11-2612-14	SHEET	
60	3A		G13-1753-04	CUSHION(LCD)	
61	1A	*	G13-1774-04	CUSHION(TNC)	
62	3A	*	G13-1784-04	CUSHION(LCD)	
63		*	H02-0614-03	INNER PACKING CASE	
64		*	H12-3074-02	PACKING FIXTURE	
65		*	H12-3075-03	PACKING FIXTURE	

Ref. No.	Address	New parts	Parts No.	Description	Destination
66		*	H13-1106-14	CARTON BOARD	
90			H21-0766-04	PROTECTION COVER	
67			H25-0085-04	PROTECTION BAG (100/200/0.07)	
68			H25-0103-04	PROTECTION BAG (125/250/0.07)	
69			H25-0720-04	PROTECTION BAG (200X350)	
70		*	H52-1512-02	ITEM CARTON CASE	K
70		*	H52-1513-02	ITEM CARTON CASE	E
70		*	H52-1514-02	ITEM CARTON CASE	M4
71		*	J02-0488-04	FOOT ACSY	
72			J19-1526-04	HOLDER	K
73			J29-0628-23	BRACKET ACSY	
74		*	J29-0663-03	BRACKET	
75		*	J29-0664-13	BRACKET	
91	2B		J32-0926-04	HEXAGON BOSS	
76	3A		K29-5222-03	KNOB(VOL)	
77	3A		K29-5223-03	KNOB(SQL)	
78	3A	*	K29-5381-03	KNOB(ENC)	
79	3A	*	K29-5400-11	BUTTON KNOB	
A	3A		N14-0569-04	CIRCULAR NUT(VOL)	
B	1B		N33-2606-45	OVAL HEAD MACHINE SCREW(CASE)	
C	2B		N67-3008-46	PAN HEAD SEMS SCREW(PA MODULE)	
D	3B		N80-2010-45	PAN HEAD TAPTITE SCREW(PANEL)	
E	1B		N80-2610-45	PAN HEAD TAPTITE SCREW(FAN)	
F	1B		N83-2608-46	PAN HEAD TAPTITE SCREW(ANT)	
G	1A		N87-2606-46	BRAZIER HEAD TAPTITE SCREW	
80			N99-0331-05	SCREW SET ACSY	E, M4
81			N99-0382-05	SCREW SET ACSY	K
82		*	N99-2014-05	SCREW SET ACSY	
83	1A		T07-0368-05	SPEAKER	
84	1B		T42-0311-25	MOTOR	
85			T91-0396-05	MICROPHONE ACSY	E, M4
86			T91-0615-05	MICROPHONE ACSY	K
87	2B		212-1021-05	HEAT PROOF TUBE (7mm)	
			TNC UNIT (X52-3310-00)		
C1			CC73GCH1H180J	CHIP C 18PF J	
C2			CK73GB1C104K	CHIP C 0.10UF K	
C3			CC73GCH1H220J	CHIP C 22PF J	
C4			CK73GB1H103K	CHIP C 0.010UF K	
C5			CK73GB1C683K	CHIP C 0.068UF K	
C6			CK73GB1H152K	CHIP C 1500PF K	
C7			CK73GB1C104K	CHIP C 0.10UF K	
C8 ,9			CK73GB1E223K	CHIP C 0.022UF K	
C10			CC73GCH1H160J	CHIP C 16PF J	
C11			CK73GB1H103K	CHIP C 0.010UF K	
C12			CK73GB1H102K	CHIP C 1000PF K	
C13			CK73GB1E223K	CHIP C 0.022UF K	
C14			CC73GCH1H160J	CHIP C 16PF J	
C15			CK73GB1H682K	CHIP C 6800PF K	
C16			CK73GB1C104K	CHIP C 0.10UF K	
C17			CK73FB1A105K	CHIP C 1.0UF K	
C18			CK73GB1E223K	CHIP C 0.022UF K	
C19			CK73GB1H682K	CHIP C 6800PF K	
C20			CK73GB1H222K	CHIP C 2200PF K	
C21			CK73GB1H221K	CHIP C 220PF K	
C22			CK73GB1H103K	CHIP C 0.010UF K	
C23			CK73GB1H102K	CHIP C 1000PF K	
C24			CK73GB1H103K	CHIP C 0.010UF K	

TM-D700A/E

PARTS LIST

TNC UNIT (X52-3310-00)
PANEL UNIT (X54-3290-00)

Ref. No.	Address	New parts	Parts No.	Description	Destination
C25			CK73GB1H682K	CHIP C 6800PF K	
C26			CK73GB1H471K	CHIP C 470PF K	
C27			CC73GCH1H101J	CHIP C 100PF J	
C28			CK73GB1H472K	CHIP C 4700PF K	
C29			CK73FB1A105K	CHIP C 1.0UF K	
C30			CK73GB1H471K	CHIP C 470PF K	
C31			CK73FB1A105K	CHIP C 1.0UF K	
C32 -39			CK73GB1C104K	CHIP C 0.10UF K	
C40			CK73GB1H152K	CHIP C 1500PF K	
CN1			E40-5851-05	FLAT CABLE CONNECTOR	
L1 -3			L92-0140-05	FERRITE CHIP	
X1			L77-1718-05	CRYSTAL RESONATOR(32.768KHZ)	
X2			L77-1780-05	CRYSTAL RESONATOR(7.9872MHZ)	
CP15-23			R90-0741-05	MULTIPLE RESISTOR	
R1			R92-1252-05	CHIP R 0 OHM	
R27			RK73GB1J473J	CHIP R 47K J 1/16W	
R28			RK73GB1J102J	CHIP R 1.0K J 1/16W	
R29			RK73GB1J224J	CHIP R 220K J 1/16W	
R31			RK73GB1J273J	CHIP R 27K J 1/16W	
R32			RK73GB1J473J	CHIP R 47K J 1/16W	
R33			RK73GB1J272J	CHIP R 2.7K J 1/16W	
R35			RK73GB1J273J	CHIP R 27K J 1/16W	
R36			RK73GB1J272J	CHIP R 2.7K J 1/16W	
R40			RK73GB1J473J	CHIP R 47K J 1/16W	
R41			RK73GB1J123J	CHIP R 12K J 1/16W	
R43			R92-1252-05	CHIP R 0 OHM	
R44			RK73GB1J473J	CHIP R 47K J 1/16W	
R45			R92-1252-05	CHIP R 0 OHM	
R46			RK73GB1J123J	CHIP R 12K J 1/16W	
R48			RK73GB1J104J	CHIP R 100K J 1/16W	
R49			RK73GB1J103J	CHIP R 10K J 1/16W	
R50			RK73GB1J123J	CHIP R 12K J 1/16W	
R51			RK73GB1J102J	CHIP R 1.0K J 1/16W	
R52			RK73GB1J472J	CHIP R 4.7K J 1/16W	
R53			RK73GB1J103J	CHIP R 10K J 1/16W	
R54			R92-1252-05	CHIP R 0 OHM	
R57			RK73GB1J103J	CHIP R 10K J 1/16W	
R58			RK73GB1J332J	CHIP R 3.3K J 1/16W	
R59			RK73GB1J222J	CHIP R 2.2K J 1/16W	
R60			RK73GB1J123J	CHIP R 12K J 1/16W	
R61 ,62			RK73GB1J103J	CHIP R 10K J 1/16W	
R63			RK73GB1J123J	CHIP R 12K J 1/16W	
R64 ,65			RK73GB1J332J	CHIP R 3.3K J 1/16W	
R66			RK73GB1J103J	CHIP R 10K J 1/16W	
R67 ,68			RK73GB1J223J	CHIP R 22K J 1/16W	
R69			RK73GB1J393J	CHIP R 39K J 1/16W	
R70			RK73GB1J103J	CHIP R 10K J 1/16W	
R72			RK73GB1J103J	CHIP R 10K J 1/16W	
R73			RK73GB1J823J	CHIP R 82K J 1/16W	
R74 ,75			RK73GB1J103J	CHIP R 10K J 1/16W	
R76			RK73GB1J154J	CHIP R 150K J 1/16W	
R77 ,78			RK73GB1J473J	CHIP R 47K J 1/16W	
R79			RK73GB1J154J	CHIP R 150K J 1/16W	
R80			RK73GB1J104J	CHIP R 100K J 1/16W	
R81			RK73GB1J563J	CHIP R 56K J 1/16W	
R83 ,84			R92-1252-05	CHIP R 0 OHM	
R85			RK73GB1J223J	CHIP R 22K J 1/16W	
R86			RK73GB1J273J	CHIP R 27K J 1/16W	
D1 -3			MA728	DIODE	
IC1			RS5C321A	IC(RTC)	

Ref. No.	Address	New parts	Parts No.	Description	Destination
IC2			TGT0210Q	IC(TNC ASIC)	
IC3		*	TMT0210Q	IC(TNC CHIP SET)	
IC4			TA75W393FU	IC(COMPARATOR)	
IC5		*	KM681000CLTI7L	SRAM IC	
IC6			TA75S393F	IC(COMPARATOR)	
IC7			TA75W01FU	IC(OP AMP X2)	
IC8		*	ADM202EARU	IC(RS232C DRIVER)	
IC8			ADM3202ARU	IC(RS232C DRIVER)	
IC9			TC7SU04FU	IC(COMS CONVERTOR)	
Q1			2SA1162(Y)	TRANSISTOR	
Q3			2SK1824	FET	
Q4			2SA1774(R)	TRANSISTOR	
Q5 -7			2SC4617(R)	TRANSISTOR	

PANEL UNIT (X54-3290-00)

Ref. No.	Address	New parts	Parts No.	Description	Destination
C1			CK73GB1C104K	CHIP C 0.10UF K	
C2 ,3			CC73GCH1H101J	CHIP C 100PF J	
C4			C92-0512-05	CHIP-TAN 1.0UF 16WV	
C5			CK73GB1C104K	CHIP C 0.10UF K	
C6			C92-0698-05	CHIP ELE 47UF 16WV	
C7 ,8			CK73GB1H102K	CHIP C 1000PF K	
C9 ,10			CC73GCH1H220J	CHIP C 22PF J	
C11			CK73GB1H103K	CHIP C 0.010UF K	
C12			CK73GB1H102K	CHIP C 1000PF K	
C13 ,14			CK73GB1H472K	CHIP C 4700PF K	
C15			CK73GB1H103K	CHIP C 0.010UF K	
C16			CK73GB1H102K	CHIP C 1000PF K	
C17 -23			CK73GB1H103K	CHIP C 0.010UF K	
CN1			E40-5852-05	FLAT CABLE CONNECTOR	
CN2 ,3			E40-5392-05	PIN ASSY	
CN4 ,5			E40-5409-05	PIN ASSY	
J1			E58-0457-05	MODULAR JACK	
L1 -7			L92-0140-05	FERRITE CHIP	
L9, 10			L92-0140-05	FERRITE CHIP	
X1		*	L77-1814-05	CRYSTAL RESONATOR(11.0592MHZ)	
CP1 -15			R90-0741-05	MULTIPLE RESISTOR	
R2			RK73GB1J473J	CHIP R 47K J 1/16W	
R3			RK73GB1J103J	CHIP R 10K J 1/16W	
R4			RK73GB1J331J	CHIP R 330 J 1/16W	
R5 ,6			RK73GB1J473J	CHIP R 47K J 1/16W	
R8			R92-0670-05	CHIP R 0 OHM	
R9 ,10			RK73FB2A560J	CHIP R 56 J 1/10W	
R11 ,12			RK73FB2A181J	CHIP R 180 J 1/10W	
R13 ,14			RK73FB2A271J	CHIP R 270 J 1/10W	
R15			R92-1252-05	CHIP R 0 OHM	
R17 -22			RK73GB1J102J	CHIP R 1.0K J 1/16W	
R25			RK73GB1J103J	CHIP R 10K J 1/16W	
R27 -29			RK73GB1J102J	CHIP R 1.0K J 1/16W	
R30 -32			RK73GB1J473J	CHIP R 47K J 1/16W	
R33			RK73GB1J102J	CHIP R 1.0K J 1/16W	
R34 -38			RK73GB1J473J	CHIP R 47K J 1/16W	
R39 -41			RK73FB2A391J	CHIP R 390 J 1/10W	
R42			RK73FB2A471J	CHIP R 470 J 1/10W	
R43			R92-1252-05	CHIP R 0 OHM	
VR1 ,2	3B		R31-0629-05	VARIABLE RESISTOR	
S1 -12			S70-0439-05	TACT SWITCH	
D1			LFB01	DIODE	
D2			MA2S111	DIODE	
D3 -23			DA221	DIODE	
D24 -30			B30-2215-05	LED	
IC1 ,2			TC4S81F	IC(UNLOCK COMPARATOR)	
IC3			L78LR05B-FA	IC(VOLTAGE REGULATOR)	

PARTS LIST

Ref. No.	Address	New parts	Parts No.	Description			Destination
IC4		*	30622M8759GP	IC(PANEL CPU)			
IC5			AT29C020-90TI	IC(FLASH ROM)			
Q1			2SA1162(Y)	TRANSISTOR			
Q2 -4		*	DTC143EKA	DIGITAL TRANSISTOR			
Q6 ,7		*	DTC143EKA	DIGITAL TRANSISTOR			
Q9 ,10		*	DTC143EKA	DIGITAL TRANSISTOR			
S13	3A	*	W02-1978-05	ENCODER			

TX-RX UNIT (X57-586X-XX) 0-11:K 0-21:M4 2-71:E

Ref. No.	Address	New parts	Parts No.	Description			Destination
C1			C92-0606-05	CHIP-TAN	4.7UF	10WV	
C2			CK73GB1H472K	CHIP C	4700PF	K	
C3			CK73GB1H103K	CHIP C	0.010UF	K	
C4			CC73GCH1H100D	CHIP C	10PF	D	
C5			CC73GCH1H060D	CHIP C	6.0PF	D	
C6 ,7			CK73GB1C104K	CHIP C	0.10UF	K	
C8			CK73GB1H471K	CHIP C	470PF	K	
C9			CC73GCH1H470J	CHIP C	47PF	J	
C10			CK73GB1H471K	CHIP C	470PF	K	
C11			CK73GB1C473K	CHIP C	0.047UF	K	
C12			C92-0002-05	CHIP-TAN	0.22UF	35WV	
C13			CK73GB1H103K	CHIP C	0.010UF	K	
C14			CK73GB1H102K	CHIP C	1000PF	K	
C15			C92-0695-05	CHIP TAN	10UF	10WV	
C17			C92-0001-05	CHIP-C	0.1UF	35WV	
C19			C92-0606-05	CHIP-TAN	4.7UF	10WV	
C21			CC73GCH1H101J	CHIP C	100PF	J	
C22			CK73GB1H102K	CHIP C	1000PF	K	
C23 ,24			CK73GB1H103K	CHIP C	0.010UF	K	
C25			C92-0593-05	CHIP-ELE	33UF	10WV	
C26 -29			CK73GB1H102K	CHIP C	1000PF	K	
C31			CC73GCH1H180J	CHIP C	18PF	J	
C32			CC73GCH1H040C	CHIP C	4.0PF	C	
C34			CC73GCH1H120J	CHIP C	12PF	J	
C35			CC73GCH1H050C	CHIP C	5.0PF	C	
C36			CK73GB1H102K	CHIP C	1000PF	K	
C37			CK73GB1H471K	CHIP C	470PF	K	
C38			CC73GCH1H010B	CHIP C	1.0PF	B	
C39 -41			CK73GB1H102K	CHIP C	1000PF	K	
C42			CC73GCH1H101J	CHIP C	100PF	J	
C43 -46			CK73GB1H102K	CHIP C	1000PF	K	
C47			CC73GCH1H390J	CHIP C	39PF	J	
C48 -50			CK73GB1H102K	CHIP C	1000PF	K	
C51			CK73FB1C105K	CHIP C	1.0UF	K	
C52			CK73GB1H102K	CHIP C	1000PF	K	
C53			CC73GCH1H270J	CHIP C	27PF	J	
C54			CK73GB1H102K	CHIP C	1000PF	K	
C55			C92-0523-05	CHIP-ELE	10UF	16WV	
C57			CK73GB1H102K	CHIP C	1000PF	K	
C58			CC73GCH1H101J	CHIP C	100PF	J	
C59			CK73GB1H103K	CHIP C	0.010UF	K	
C60			CK73GB1H102K	CHIP C	1000PF	K	
C61			CK73GB1H103K	CHIP C	0.010UF	K	
C62			C92-0523-05	CHIP-ELE	10UF	16WV	
C65 ,66			CK73GB1H102K	CHIP C	1000PF	K	
C67			CK73GB1H103K	CHIP C	0.010UF	K	
C68			CK73GB1H471K	CHIP C	470PF	K	
C69			C93-0552-05	CHIP C	2.0PF	C	
C70 ,71			CK73GB1H102K	CHIP C	1000PF	K	
C72			CC73GCH1H270J	CHIP C	27PF	J	
C73			C93-0603-05	CHIP C	1000PF	K	

PANEL UNIT (X54-3290-0

TX-RX UNIT (X57-586X-XX) 0-11:K 0-21:M4 2-71:

Ref. No.	Address	New parts	Parts No.	Description			Destination
C74			C93-0566-05	CHIP C	33PF	J	
C75			CC73GCH1H0R5B	CHIP C	0.5PF	B	
C76			CC73GCH1H010B	CHIP C	1.0PF	B	
C77			C93-0666-05	CHIP C	24PF	500WV	
C79			CK73GB1H102K	CHIP C	1000PF	K	
C80			C93-0563-05	CHIP C	18PF	J	
C81			CC73GCH1H0R5B	CHIP C	0.5PF	B	
C82			CC73GCH1H010B	CHIP C	1.0PF	B	
C83			CK73GB1C104K	CHIP C	0.10UF	K	
C86			CK73GB1H102K	CHIP C	1000PF	K	
C92			C93-0563-05	CHIP C	18PF	J	
C93			CC73GCH1H101J	CHIP C	100PF	J	
C100			CK73GB1C104K	CHIP C	0.10UF	K	
C101			CK73GB1H102K	CHIP C	1000PF	K	
C102			CC73GCH1H220J	CHIP C	22PF	J	
C103			CK73GB1H103K	CHIP C	0.010UF	K	
C104			CK73GB1C104K	CHIP C	0.10UF	K	E
C105			CC73GCH1H050C	CHIP C	5.0PF	C	
C106			CK73GB1C104K	CHIP C	0.10UF	K	E
C107,108			CK73GB1C104K	CHIP C	0.10UF	K	K, M4
C109			CK73GB1H102K	CHIP C	1000PF	K	
C110			CC73GCH1H270J	CHIP C	27PF	J	
C111			CK73GB1H102K	CHIP C	1000PF	K	
C112			CK73GB1C104K	CHIP C	0.10UF	K	
C113			C92-0610-05	CHIP ELE	47UF	16WV	
C114			CK73GB1C104K	CHIP C	0.10UF	K	
C116			CK73GB1H471K	CHIP C	470PF	K	
C118			CK73GB1C473K	CHIP C	0.047UF	K	
C119			CK73GB1C104K	CHIP C	0.10UF	K	
C120			CC73GCH1H270J	CHIP C	27PF	J	
C121			CK73GB1C104K	CHIP C	0.10UF	K	
C122			CC73GCH1H271J	CHIP C	270PF	J	
C123,124			CK73GB1C104K	CHIP C	0.10UF	K	
C125			CC73GCH1H271J	CHIP C	270PF	J	
C126			CK73GB1C104K	CHIP C	0.10UF	K	
C128			CC73GCH1H101J	CHIP C	100PF	J	
C129			CK73GB1H472K	CHIP C	4700PF	K	
C131			CK73GB1C104K	CHIP C	0.10UF	K	
C132			CC73GCH1H150J	CHIP C	15PF	J	
C133			CK73GB1H102K	CHIP C	1000PF	K	
C134			CK73GB1C104K	CHIP C	0.10UF	K	
C135			CK73GB1H102K	CHIP C	1000PF	K	
C137			CK73GB1C104K	CHIP C	0.10UF	K	
C138			CK73GB1E123K	CHIP C	0.012UF	K	
C139			CK73GB1H102K	CHIP C	1000PF	K	
C140			CK73GB1H103K	CHIP C	0.010UF	K	
C141			CK73GB1E123K	CHIP C	0.012UF	K	
C142			CK73FB1C105K	CHIP C	1.0UF	K	
C144,145			CK73GB1C104K	CHIP C	0.10UF	K	
C146			CK73GB1C393K	CHIP C	0.039UF	K	
C147			CK73GB1H103K	CHIP C	0.010UF	K	
C153			CC73GCH1H100D	CHIP C	10PF	D	
C154			CK73FB1C105K	CHIP C	1.0UF	K	
C164			C92-0606-05	CHIP-TAN	4.7UF	10WV	
C169			CC73GCH1H180J	CHIP C	18PF	J	
C170-172			CK73GB1H102K	CHIP C	1000PF	K	
C174			CK73GB1C104K	CHIP C	0.10UF	K	
C200			CK73GB1H103K	CHIP C	0.010UF	K	
C201,202			CC73GCH1H680J	CHIP C	68PF	J	
C203,204			CK73GB1H103K	CHIP C	0.010UF	K	

TM-D700A/E

PARTS LIST

TX-RX UNIT (X57-586X-XX) 0-11:K 0-21:M4 2-71:E

Ref. No.	Address	New parts	Parts No.	Description			Destination
C206-209			CK73GB1H102K	CHIP C	1000PF	K	
C210			CK73GB1H471K	CHIP C	470PF	K	
C211			CK73GB1H102K	CHIP C	1000PF	K	
C212,213			CK73GB1H471K	CHIP C	470PF	K	
C216			CC73GCH1H2R5B	CHIP C	2.5PF	B	
C217			CK73GB1H471K	CHIP C	470PF	K	
C218			CK73GB1H102K	CHIP C	1000PF	K	
C219			CC73GCH1H040C	CHIP C	4.0PF	C	
C220			CC73GCH1H020B	CHIP C	2.0PF	B	K
C220			CC73GCH1H2R5B	CHIP C	2.5PF	B	E, M4
C221			CC73GCH1H030B	CHIP C	3.0PF	B	K
C221			CC73GCH1H070D	CHIP C	7.0PF	D	E, M4
C222			CC73GCH1H330J	CHIP C	33PF	J	
C223			CK73GB1H471K	CHIP C	470PF	K	
C225			CC73GCH1H070D	CHIP C	7.0PF	D	
C226			CK73GB1H471K	CHIP C	470PF	K	
C227			CC73GCH1H220J	CHIP C	22PF	J	
C228			CC73GCH1H030B	CHIP C	3.0PF	B	
C229			CC73GCH1H330J	CHIP C	33PF	J	
C230			CK73GB1H471K	CHIP C	470PF	K	
C231			CK73GB1H103K	CHIP C	0.010UF	K	
C232			CK73GB1H102K	CHIP C	1000PF	K	
C233			CC73GCH1H050C	CHIP C	5.0PF	C	
C234,235			CK73GB1H102K	CHIP C	1000PF	K	
C236			CK73GB1H471K	CHIP C	470PF	K	
C239			CC73GCH1H040C	CHIP C	4.0PF	C	
C241			CC73GCH1H101J	CHIP C	100PF	J	
C242			CK73GB1H102K	CHIP C	1000PF	K	
C243			CC73GCH1H470J	CHIP C	47PF	J	
C244			CK73GB1C104K	CHIP C	0.10UF	K	
C245			CK73GB1H102K	CHIP C	1000PF	K	
C247			CK73GB1H102K	CHIP C	1000PF	K	
C248			CK73GB1H103K	CHIP C	0.010UF	K	
C249			C92-0610-05	CHIP ELE	47UF	16WV	
C250			CC73GCH1H101J	CHIP C	100PF	J	
C251			CK73GB1C104K	CHIP C	0.10UF	K	
C252			CK73GB1H102K	CHIP C	1000PF	K	
C253			CK73GB1H471K	CHIP C	470PF	K	
C254			CK73GB1H102K	CHIP C	1000PF	K	
C255			CC73GCH1H030B	CHIP C	3.0PF	B	
C256			CK73GB1H102K	CHIP C	1000PF	K	
C257			CK73GB1C104K	CHIP C	0.10UF	K	
C258			CC73GCH1H010B	CHIP C	1.0PF	B	
C259			CC73GCH1H220J	CHIP C	22PF	J	
C270			CC73GCH1H470J	CHIP C	47PF	J	
C301			C92-0606-05	CHIP-TAN	4.7UF	10WV	
C302			CK73GB1H472K	CHIP C	4700PF	K	
C303			CK73GB1H103K	CHIP C	0.010UF	K	
C304			CC73GCH1H100D	CHIP C	10PF	D	
C305			CC73GCH1H060D	CHIP C	6.0PF	D	
C307			CK73GB1C104K	CHIP C	0.10UF	K	
C308			CK73GB1H471K	CHIP C	470PF	K	
C309			CK73GB1C473K	CHIP C	0.047UF	K	
C310			CC73GCH1H470J	CHIP C	47PF	J	
C311			CK73GB1H471K	CHIP C	470PF	K	
C312			CK73GB1H103K	CHIP C	0.010UF	K	
C313			CK73GB1C473K	CHIP C	0.047UF	K	
C314			CK73GB1H102K	CHIP C	1000PF	K	
C315			C92-0002-05	CHIP-TAN	0.22UF	35WV	
C316			C92-0565-05	CHIP-TAN	6.8UF	10WV	
C317			CC73GCH1H050C	CHIP C	5.0PF	C	

Ref. No.	Address	New parts	Parts No.	Description			Destination
C318			C92-0002-05	CHIP-TAN	0.22UF	35WV	
C319			CC73GCH1H030B	CHIP C	3.0PF	B	
C320			C92-0606-05	CHIP-TAN	4.7UF	10WV	
C321			CK73GB1H103K	CHIP C	0.010UF	K	
C322			CK73GB1H471K	CHIP C	470PF	K	
C323			CC73GCH1H100D	CHIP C	10PF	D	
C324			CK73GB1H471K	CHIP C	470PF	K	
C325			CK73GB1H103K	CHIP C	0.010UF	K	
C326			C92-0593-05	CHIP-ELE	33UF	10WV	
C327			CC73GCH1H040C	CHIP C	4.0PF	C	
C328			CK73GB1H471K	CHIP C	470PF	K	
C329			CC73GCH1H040C	CHIP C	4.0PF	C	
C330			CK73GB1H471K	CHIP C	470PF	K	
C331			CK73GB1H102K	CHIP C	1000PF	K	
C332			CC73GCH1H470J	CHIP C	47PF	J	
C333			CC73GCH1H101J	CHIP C	100PF	J	
C334			CC73GCH1H080D	CHIP C	8.0PF	D	
C335			CC73GCH1H010B	CHIP C	1.0PF	B	
C336-338			CK73GB1H471K	CHIP C	470PF	K	
C339			CK73GB1H102K	CHIP C	1000PF	K	
C340			CC73GCH1H030B	CHIP C	3.0PF	B	
C341			CK73GB1H471K	CHIP C	470PF	K	
C342			CC73GCH1H010B	CHIP C	1.0PF	B	
C343			CK73GB1H471K	CHIP C	470PF	K	
C344			CK73GB1H102K	CHIP C	1000PF	K	
C345			CC73GCH1H050C	CHIP C	5.0PF	C	
C346			CK73GB1H471K	CHIP C	470PF	K	
C347			CK73GB1H102K	CHIP C	1000PF	K	
C348,349			CK73GB1H471K	CHIP C	470PF	K	
C350			CC73GCH1H050C	CHIP C	5.0PF	C	
C351			CC73GCH1H120J	CHIP C	12PF	J	
C352-354			CK73GB1H471K	CHIP C	470PF	K	
C355			CK73GB1C104K	CHIP C	0.10UF	K	
C356			CC73GCH1H080D	CHIP C	8.0PF	D	
C357-359			CK73GB1H471K	CHIP C	470PF	K	
C360			CC73GCH1H080D	CHIP C	8.0PF	D	
C361,362			CK73GB1H102K	CHIP C	1000PF	K	
C364			CK73GB1H103K	CHIP C	0.010UF	K	
C365			CC73GCH1H040C	CHIP C	4.0PF	C	
C366			CK73GB1H102K	CHIP C	1000PF	K	
C367			CK73GB1C104K	CHIP C	0.10UF	K	
C368			C93-0558-05	CHIP C	8.0PF	D	
C369			CK73GB1H102K	CHIP C	1000PF	K	
C371			CK73GB1C104K	CHIP C	0.10UF	K	E
C372			CK73GB1H102K	CHIP C	1000PF	K	
C373			C93-0560-05	CHIP C	10PF	D	
C376			CC73GCH1H010B	CHIP C	1.0PF	B	
C377			CC73GCH1H020B	CHIP C	2.0PF	B	
C378			CC73GCH1H0R5B	CHIP C	0.5PF	B	
C379			CC73GCH1H020B	CHIP C	2.0PF	B	
C380			C93-0551-05	CHIP C	1.5PF	C	
C382			CC73FCH1HR75B	CHIP C	0.75PF	B	
C383			CC73GCH1HR75B	CHIP C	0.75PF	B	
C384			C93-0555-05	CHIP C	5.0PF	C	
C385,386			C93-0557-05	CHIP C	7.0PF	D	
C393			CK73GB1H471K	CHIP C	470PF	K	
C394			CK73GB1C104K	CHIP C	0.10UF	K	
C395			CC73GCH1H020B	CHIP C	2.0PF	B	
C397			CC73GCH1H050C	CHIP C	5.0PF	C	
C399			C92-0606-05	CHIP-TAN	4.7UF	10WV	

PARTS LIST

TX-RX UNIT (X57-586X-XX) 0-11:K 0-21:M4 2-71:

Ref. No.	Address	New parts	Parts No.	Description			Destination
C400			CK73GB1C104K	CHIP C	0.10UF	K	E
C401			CK73GB1H103K	CHIP C	0.010UF	K	E
C402,403			CK73GB1C104K	CHIP C	0.10UF	K	
C404			CK73GB1H103K	CHIP C	0.010UF	K	
C405			CK73GB1C104K	CHIP C	0.10UF	K	
C406			CC73GCH1H180J	CHIP C	18PF	J	
C407,408			CC73GCH1H271J	CHIP C	270PF	J	
C409			CC73GCH1H270J	CHIP C	27PF	J	
C410			CC73GCH1H101J	CHIP C	100PF	J	
C411			CK73GB1C473K	CHIP C	0.047UF	K	
C412			CC73GCH1H270J	CHIP C	27PF	J	
C413			C92-0610-05	CHIP ELE	47UF	16WV	
C414			CK73GB1H472K	CHIP C	4700PF	K	
C415			CK73GB1C104K	CHIP C	0.10UF	K	
C416			CK73FB1C105K	CHIP C	1.0UF	K	
C418			CK73GB1C104K	CHIP C	0.10UF	K	
C420,421			CK73GB1E123K	CHIP C	0.012UF	K	
C422			CK73GB1C104K	CHIP C	0.10UF	K	
C423			CK73GB1C393K	CHIP C	0.039UF	K	
C424			CC73GCH1H150J	CHIP C	15PF	J	
C425			CK73GB1H103K	CHIP C	0.010UF	K	
C427			CK73GB1H103K	CHIP C	0.010UF	K	
C428			CK73GB1H102K	CHIP C	1000PF	K	
C429			CC73GCH1H060D	CHIP C	6.0PF	D	
C430			C92-0606-05	CHIP-TAN	4.7UF	10WV	
C433			CK73GB1H102K	CHIP C	1000PF	K	
C434			CK73GB1H332K	CHIP C	3300PF	K	
C436			CK73GB1C104K	CHIP C	0.10UF	K	
C500			CC73GCH1H040C	CHIP C	4.0PF	C	
C501			CK73GB1H102K	CHIP C	1000PF	K	
C503,504			CK73GB1H102K	CHIP C	1000PF	K	
C505			CC73GCH1H101J	CHIP C	100PF	J	
C507,508			CK73GB1H103K	CHIP C	0.010UF	K	
C509			CC73GCH1H101J	CHIP C	100PF	J	
C510,511			CC73GCH1H680J	CHIP C	68PF	J	
C512			CC73GCH1H010B	CHIP C	1.0PF	B	
C513			CC73GCH1H101J	CHIP C	100PF	J	
C514,515			CK73GB1H103K	CHIP C	0.010UF	K	
C517			CK73GB1H471K	CHIP C	470PF	K	
C518,519			CC73GCH1H030B	CHIP C	3.0PF	B	
C520			CK73GB1H471K	CHIP C	470PF	K	
C521			CC73GCH1H040C	CHIP C	4.0PF	C	
C523,524			CK73GB1H471K	CHIP C	470PF	K	
C525			CC73GCH1H030B	CHIP C	3.0PF	B	
C526			CC73GCH1H100D	CHIP C	10PF	D	
C527,528			CK73GB1H471K	CHIP C	470PF	K	
C529			CC73GCH1H050C	CHIP C	5.0PF	C	
C531			CK73GB1H471K	CHIP C	470PF	K	
C532			CC73GCH1H040C	CHIP C	4.0PF	C	
C533			CK73GB1H471K	CHIP C	470PF	K	
C534			CC73GCH1H050C	CHIP C	5.0PF	C	
C535			CC73GCH1H030B	CHIP C	3.0PF	B	
C536,537			CK73GB1H102K	CHIP C	1000PF	K	
C538			CK73GB1H471K	CHIP C	470PF	K	
C539-544			CK73GB1H102K	CHIP C	1000PF	K	
C545			CK73GB1H471K	CHIP C	470PF	K	
C546			CC73GCH1H100D	CHIP C	10PF	D	E, M4
C546			CC73GCH1H150J	CHIP C	15PF	J	K
C548			CC73GCH1H020B	CHIP C	2.0PF	B	
C549			CC73GCH1H070D	CHIP C	7.0PF	D	

Ref. No.	Address	New parts	Parts No.	Description			Destinatio
C550,551			CK73GB1H471K	CHIP C	470PF	K	
C552			CC73GCH1H470J	CHIP C	47PF	J	
C553			CK73GB1H471K	CHIP C	470PF	K	
C554			CC73GCH1H150J	CHIP C	15PF	J	
C555			CC73GCH1H470J	CHIP C	47PF	J	
C557			CC73GCH1H390J	CHIP C	39PF	J	
C558			CK73GB1H471K	CHIP C	470PF	K	
C559			CC73GCH1H060D	CHIP C	6.0PF	D	
C560			CC73GCH1H070D	CHIP C	7.0PF	D	
C561,562			CK73GB1H102K	CHIP C	1000PF	K	
C563			CC73GCH1H070D	CHIP C	7.0PF	D	
C564			CC73GCH1H100D	CHIP C	10PF	D	
C565			CC73GCH1H101J	CHIP C	100PF	J	
C567			CC73GCH1H020B	CHIP C	2.0PF	B	
C568			CC73GCH1H101J	CHIP C	100PF	J	
C569			CK73GB1H471K	CHIP C	470PF	K	
C570			CC73GCH1H020B	CHIP C	2.0PF	B	
C600			CC73GCH1H101J	CHIP C	100PF	J	
C601-603			CK73GB1C104K	CHIP C	0.10UF	K	
C604			CC73GCH1H101J	CHIP C	100PF	J	
C605			CK73GB1C104K	CHIP C	0.10UF	K	
C606			CC73GCH1H101J	CHIP C	100PF	J	
C609			CC73GCH1H101J	CHIP C	100PF	J	
C611-613			CK73GB1C104K	CHIP C	0.10UF	K	
C614			CK73GB1H471K	CHIP C	470PF	K	
C616			CK73GB1H102K	CHIP C	1000PF	K	
C617			C92-0756-05	CHIP ELE	330UF	16WV	
C618			CK73GB1H103K	CHIP C	0.010UF	K	
C619			CK73GB1H102K	CHIP C	1000PF	K	
C620			CK73GB1H103K	CHIP C	0.010UF	K	
C621,622			CK73GB1H102K	CHIP C	1000PF	K	
C624,625			CC73GCH1H220J	CHIP C	22PF	J	
C626			CK73FB1C105K	CHIP C	1.0UF	K	
C627			CK73GB1H103K	CHIP C	0.010UF	K	
C628			CK73GB1H471K	CHIP C	470PF	K	
C629			CC73GCH1H101J	CHIP C	100PF	J	
C630			CK73FB1C105K	CHIP C	1.0UF	K	
C700			C92-0514-05	CHIP-TAN	2.2UF	10WV	
C702			CK73GB1C683J	CHIP C	0.068UF	J	
C703-708			CK73FB1C105K	CHIP C	1.0UF	K	
C709			CC73GCH1H221J	CHIP C	220PF	J	
C710			C92-0695-05	CHIP TAN	10UF	10WV	
C711			CK73FB1C105K	CHIP C	1.0UF	K	
C712			CK73GB1H103K	CHIP C	0.010UF	K	
C713			CK73GB1H222K	CHIP C	2200PF	K	
C715,716			CK73FB1C105K	CHIP C	1.0UF	K	
C717			CK73GB1E123K	CHIP C	0.012UF	K	
C719			CK73GB1C683J	CHIP C	0.068UF	J	
C720,721			CK73FB1C105K	CHIP C	1.0UF	K	
C722			CK73GB1C104K	CHIP C	0.10UF	K	
C724			C92-0606-05	CHIP-TAN	4.7UF	10WV	
C725-727			CC73GCH1H101J	CHIP C	100PF	J	
C728			CK73GB1C104K	CHIP C	0.10UF	K	
C729			CK73GB1C473K	CHIP C	0.047UF	K	
C730			CC73GCH1H101J	CHIP C	100PF	J	
C732,733			CC73GCH1H101J	CHIP C	100PF	J	
C734			CK73FB1C105K	CHIP C	1.0UF	K	
C736			CK73FB1C105K	CHIP C	1.0UF	K	
C738,739			CC73GCH1H101J	CHIP C	100PF	J	
C743			CK73GB1C473K	CHIP C	0.047UF	K	

TM-D700A/E

PARTS LIST

TX-RX UNIT (X57-586X-XX) 0-11:K 0-21:M4 2-71:E

Ref. No.	Address	New parts	Parts No.	Description			Destination
C800-802			CK73GB1H103K	CHIP C	0.010UF	K	
C803			CK73GB1H471K	CHIP C	470PF	K	
C804			CK73GB1H103K	CHIP C	0.010UF	K	
C805			CK73GB1H471K	CHIP C	470PF	K	
C806,807			CK73GB1H103K	CHIP C	0.010UF	K	
C808			CK73GB1C104K	CHIP C	0.10UF	K	
C809			CC73GCH1H101J	CHIP C	100PF	J	
C810			CK73GB1H471K	CHIP C	470PF	K	
C812			CK73GB1C273K	CHIP C	0.027UF	K	
C814			CK73GB1H102K	CHIP C	1000PF	K	
C815			CK73GB1E123K	CHIP C	0.012UF	K	
C817			CK73GB1H103K	CHIP C	0.010UF	K	
C819			C92-0606-05	CHIP-TAN	4.7UF	10WV	
C820			CK73GB1E223K	CHIP C	0.022UF	K	
C821			CK73GB1C104K	CHIP C	0.10UF	K	
C822			CK73GB1E223K	CHIP C	0.022UF	K	
C823			CK73GB1H102K	CHIP C	1000PF	K	
C824			CC73GCH1H820J	CHIP C	82PF	J	
C825			CK73GB1C104K	CHIP C	0.10UF	K	
C826			CK73GB1H103K	CHIP C	0.010UF	K	
C827			CK73GB1C104K	CHIP C	0.10UF	K	
C828			CK73GB1H332K	CHIP C	3300PF	K	
C829			CK73GB1H561K	CHIP C	560PF	K	
C830			CK73GB1H103K	CHIP C	0.010UF	K	
C831			CK73GB1H332K	CHIP C	3300PF	K	
C832			CK73GB1H561K	CHIP C	560PF	K	
C833			CK73GB1H102K	CHIP C	1000PF	K	
C834			C92-0514-05	CHIP-TAN	2.2UF	10WV	
C835,836			CK73FB1C105K	CHIP C	1.0UF	K	
C837			CK73GB1H471K	CHIP C	470PF	K	
C840			CK73GB1H103K	CHIP C	0.010UF	K	
C841			C92-0567-05	CHIP-TAN	68UF	6.3WV	
C842			CK73FB1C105K	CHIP C	1.0UF	K	
C843,844			CK73GB1E183K	CHIP C	0.018UF	K	
C845			CK73GB1H103K	CHIP C	0.010UF	K	
C846			CK73GB1C104K	CHIP C	0.10UF	K	
C847,848			CK73GB1H103K	CHIP C	0.010UF	K	
C849			CK73GB1C104K	CHIP C	0.10UF	K	
C850			CE04EW1H470M	ELECTRO	47UF	50WV	
C851			C92-0610-05	CHIP-ELE	47UF	16WV	
C852			CE04EW1C471M	ELECTRO	470UF	16WV	
C853			CK73GB1C104K	CHIP C	0.10UF	K	
C854			CE04EW1C471M	ELECTRO	470UF	16WV	
C855			CK73GB1C104K	CHIP C	0.10UF	K	
C856,857			C92-0610-05	CHIP-ELE	47UF	16WV	
C858			CE04EW1H470M	ELECTRO	47UF	50WV	
C859			CK73GB1H103K	CHIP C	0.010UF	K	
C860			CC73GCH1H101J	CHIP C	100PF	J	
C861			C92-0558-05	CHIP-ELE	100UF	16WV	
C862,863			CK73GB1H102K	CHIP C	1000PF	K	
C864,865			CK73GB1H103K	CHIP C	0.010UF	K	
C868			CK73GB1E223K	CHIP C	0.022UF	K	
C869			CK73GB1H102K	CHIP C	1000PF	K	
C870			CC73GCH1H390J	CHIP C	39PF	J	
C871			CK73GB1E183K	CHIP C	0.018UF	K	
C872			CK73GB1C473K	CHIP C	0.047UF	K	
C900,901			CK73GB1H102K	CHIP C	1000PF	K	
C902			C92-0558-05	CHIP-ELE	100UF	16WV	
C903			CK73GB1H103K	CHIP C	0.010UF	K	
C904			CK73GB1H102K	CHIP C	1000PF	K	
C905			C92-0610-05	CHIP-ELE	47UF	16WV	

Ref. No.	Address	New parts	Parts No.	Description			Destination
C906			CK73GB1C104K	CHIP C	0.10UF	K	
C907,908			C92-0610-05	ELECTROLYTIC CAP			
C909,910			CK73GB1H103K	CHIP C	0.010UF	K	
C911			CK73GB1H102K	CHIP C	1000PF	K	
C912			CK73GB1C104K	CHIP C	0.10UF	K	
C913			CK73GB1H471K	CHIP C	470PF	K	
C914			C92-0610-05	CHIP-ELE	47UF	16WV	
C916			C92-0558-05	CHIP-ELE	100UF	16WV	
C917			CK73GB1H103K	CHIP C	0.010UF	K	
C919			CK73GB1H103K	CHIP C	0.010UF	K	
C920			CC73GCH1H101J	CHIP C	100PF	J	
C921			C92-0558-05	CHIP-ELE	100UF	16WV	
C922			CK73GB1H103K	CHIP C	0.010UF	K	
C923			CK73GB1C104K	CHIP C	0.10UF	K	
C924,925			CK73FB1C105K	CHIP C	1.0UF	K	
C926,927			CK73GB1H103K	CHIP C	0.010UF	K	
C929			CK73GB1H102K	CHIP C	1000PF	K	
C931			CK73GB1H102K	CHIP C	1000PF	K	
C932,933			C90-4053-05	ELECTROLYTIC 1000UF		16WV	
TC1			C05-0383-05	CERAMIC TRIMMER CAP(6P)			
TC300			C05-0383-05	CERAMIC TRIMMER CAP(6P)			
CN1			E23-0486-05	TERMINAL			
CN600			E40-5641-05	FLAT CABLE CONNECTOR			
CN601			E40-5618-05	FLAT CABLE CONNECTOR			
CN602			E40-5823-05	FLAT CABLE CONNECTOR			
CN800			E40-3237-05	PIN ASSY			
CN900			E40-3237-05	PIN ASSY			
J600		*	E58-0435-05	SUB SOCKET(D)			
J601			E11-0439-05	2.5D PHONE JACK(5P)			
J602			E58-0410-05	MODULAR JACK			
J700			E56-0405-05	DIN SOCKET			
J800			E58-0469-05	MODULAR JACK			
J801,802			E11-0448-05	3.5D PHONE JACK(3P)			
W602			E37-0697-05	PROCESSED LEAD WIRE			
F800			F53-0108-05	FUSE			
F900			F53-0128-05	FUSE			
F901,902			F53-0108-05	FUSE			
88	2B		G10-0793-14	FIBROUS SHEET			
			J30-0545-05	SPACER			
89	2B	*	J99-0359-14	ADHESIVE TAPE			
CF100			L72-0971-05	CERAMIC FILTER			E
CF101		*	L72-0979-05	CERAMIC FILTER			
CF400		*	L72-0980-05	CERAMIC FILTER			E
CF401		*	L72-0981-05	CERAMIC FILTER			
L1			L40-2275-92	SMALL FIXED INDUCTOR(22NH)			
L3		*	L40-1585-92	SMALL FIXED INDUCTOR(150NH)			
L5			L40-2275-92	SMALL FIXED INDUCTOR(22NH)			
L6		*	L40-3375-92	SMALL FIXED INDUCTOR(33NH)			
L7			L40-1085-34	SMALL FIXED INDUCTOR(100NH)			
L8			L34-1239-05	AIR-CORE COIL			
L9			L34-0894-05	AIR-CORE COIL			
L10			L34-0742-05	AIR-CORE COIL			
L11			L34-1239-05	AIR-CORE COIL			
L12			L34-0742-05	AIR-CORE COIL			
L14			L34-0742-05	AIR-CORE COIL			
L15			L34-4520-05	AIR-CORE COIL			
L16			L40-2275-92	SMALL FIXED INDUCTOR(22NH)			
L100,101			L40-5685-34	SMALL FIXED INDUCTOR(560NH)			
L102			L34-4585-05	COIL			
L200		*	L34-4595-05	COIL			
L201		*	L39-1421-05	TOROIDAL COIL			

PARTS LIST

TX-RX UNIT (X57-586X-XX) 0-11:K 0-21:M4 2-71

Ref. No.	Address	New parts	Parts No.	Description	Destination
L202		*	L40-1585-92	SMALL FIXED INDUCTOR(150NH)	
L203		*	L40-4775-92	SMALL FIXED INDUCTOR(47NH)	
L204			L34-4506-05	COIL	
L205,206			L40-5675-54	SMALL FIXED INDUCTOR(56NH)	
L207			L34-4506-05	COIL	
L209			L34-4506-05	COIL	
L210		*	L40-4775-92	SMALL FIXED INDUCTOR(47NH)	
L211		*	L40-2785-92	SMALL FIXED INDUCTOR(270NH)	
L213		*	L40-1585-92	SMALL FIXED INDUCTOR(150NH)	
L214			L40-1085-54	SMALL FIXED INDUCTOR(100NH)	
L215			L40-8271-34	SMALL FIXED INDUCTOR(82NH)	
L216,217			L40-1095-34	SMALL FIXED INDUCTOR(1UH)	
L219,220		*	L40-4775-92	SMALL FIXED INDUCTOR(47NH)	
L221		*	L40-6875-92	SMALL FIXED INDUCTOR(68NH)	
L222			L40-1575-92	SMALL FIXED INDUCTOR(15NH)	
L223			L40-5675-54	SMALL FIXED INDUCTOR(56NH)	
L300			L40-2275-92	SMALL FIXED INDUCTOR(22NH)	
L301		*	L40-3975-92	SMALL FIXED INDUCTOR(39NH)	
L302		*	L40-6865-92	SMALL FIXED INDUCTOR(6.8NH)	
L303			L40-2275-92	SMALL FIXED INDUCTOR(22NH)	
L304		*	L40-6865-92	SMALL FIXED INDUCTOR(6.8NH)	
L305			L40-2275-92	SMALL FIXED INDUCTOR(22NH)	
L306			L40-1085-92	SMALL FIXED INDUCTOR(100NH)	
L307			L40-1275-92	SMALL FIXED INDUCTOR(12NH)	
L308			L40-1575-92	SMALL FIXED INDUCTOR(15NH)	
L309			L40-1575-34	SMALL FIXED INDUCTOR(15NH)	
L310			L34-0742-05	AIR-CORE COIL	
L311			L34-1239-05	AIR-CORE COIL	
L312		*	L34-4617-05	AIR-CORE COIL	
L313,314			L34-1039-05	AIR-CORE COIL	
L315			L34-1228-05	AIR-CORE COIL	
L316			L34-1052-05	AIR-CORE COIL	
L317			L40-1875-54	SMALL FIXED INDUCTOR(18NH)	
L318,319		*	L34-4617-05	AIR-CORE COIL	
L400			L40-1095-34	SMALL FIXED INDUCTOR(1UH)	
L401			L34-4459-05	COIL	
L500			L34-4596-05	COIL	
L501		*	L40-1091-86	SMALL FIXED INDUCTOR(1.0UH)	
L502		*	L40-6865-92	SMALL FIXED INDUCTOR(6.8NH)	
L503		*	L39-1421-05	TOROIDAL COIL	
L504		*	L40-3963-92	SMALL FIXED INDUCTOR(3.9NH)	
L505		*	L40-1563-92	SMALL FIXED INDUCTOR(1.5NH)	
L508			L79-1525-05	FILTER MODULE	E, M4
L508			L79-1526-05	FILTER MODULE	K
L509		*	L40-3975-92	SMALL FIXED INDUCTOR(39NH)	
L510			L40-1275-92	SMALL FIXED INDUCTOR(12NH)	
L511		*	L40-8275-92	SMALL FIXED INDUCTOR(82NH)	
L512			L40-4763-92	SMALL FIXED INDUCTOR(4.7NH)	
L513			L40-2775-92	SMALL FIXED INDUCTOR(27NH)	
L514		*	L40-2285-92	SMALL FIXED INDUCTOR(220NH)	
L515			L40-1075-92	SMALL FIXED INDUCTOR(10NH)	
L516			L40-1085-92	SMALL FIXED INDUCTOR(100NH)	
L517			L79-1574-05	FILTER MODULE	E, M4
L517			L79-1575-05	FILTER MODULE	K
L518,519			L40-1875-92	SMALL FIXED INDUCTOR(18NH)	
L520		*	L40-2785-92	SMALL FIXED INDUCTOR(270NH)	
L521			L40-1275-92	SMALL FIXED INDUCTOR(12NH)	
L522,523			L40-6875-34	SMALL FIXED INDUCTOR(68NH)	
L524			L40-1085-92	SMALL FIXED INDUCTOR(100NH)	
L525			L40-1575-92	SMALL FIXED INDUCTOR(15NH)	

Ref. No.	Address	New parts	Parts No.	Description	Destinati
L526			L40-1085-92	SMALL FIXED INDUCTOR(100NH)	
L527,528			L40-5675-92	SMALL FIXED INDUCTOR(56NH)	
L529,530		*	L40-3975-92	SMALL FIXED INDUCTOR(39NH)	
L531,532			L40-1075-92	SMALL FIXED INDUCTOR(10NH)	
L600			L40-3381-37	SMALL FIXED INDUCTOR(0.330UH)	
L601			L92-0140-05	FERRITE CHIP	
L602,603			L92-0131-05	FERRITE CHIP	
L604-608			L92-0140-05	FERRITE CHIP	E
X1		*	L77-1831-05	CRYSTAL RESONATOR(12.8MHZ)	
X300		*	L77-1831-05	CRYSTAL RESONATOR(12.8MHZ)	
X400			L77-1478-05	CRYSTAL RESONATOR(45.504711M)	
X600		*	L77-1814-05	CRYSTAL RESONATOR(11.0592MHZ)	
X700			L78-0459-05	RESONATOR (4.19MHZ)	
XF100			L71-0491-05	MCF (38.85MHZ)	
XF400			L71-0409-15	MCF (45.050MHZ)	
R1			RK73GB1J224J	CHIP R 220K J 1/16W	
R2			RK73GB1J473J	CHIP R 47K J 1/16W	
R3			RK73GB1J471J	CHIP R 470 J 1/16W	
R4			RK73GB1J332J	CHIP R 3.3K J 1/16W	
R5			RK73GB1J220J	CHIP R 22 J 1/16W	
R6			RK73GB1J223J	CHIP R 22K J 1/16W	
R7 -9			RK73GB1J102J	CHIP R 1.0K J 1/16W	
R10			RK73GB1J223J	CHIP R 22K J 1/16W	
R11			RK73GB1J103J	CHIP R 10K J 1/16W	
R12			RK73GB1J682J	CHIP R 6.8K J 1/16W	
R13			RK73GB1J332J	CHIP R 3.3K J 1/16W	
R14			RK73GB1J101J	CHIP R 100 J 1/16W	
R15			RK73GB1J122J	CHIP R 1.2K J 1/16W	
R16			RK73GB1J101J	CHIP R 100 J 1/16W	
R17			RK73GB1J471J	CHIP R 470 J 1/16W	
R18			RK73GB1J152J	CHIP R 1.5K J 1/16W	
R19			R92-1252-05	CHIP R 0 OHM	
R20			RK73GB1J473J	CHIP R 47K J 1/16W	
R21			RK73GB1J224J	CHIP R 220K J 1/16W	
R22 ,23			RK73GB1J102J	CHIP R 1.0K J 1/16W	
R24			RK73GB1J332J	CHIP R 3.3K J 1/16W	
R25			RK73GB1J222J	CHIP R 2.2K J 1/16W	
R26			RK73GB1J472J	CHIP R 4.7K J 1/16W	
R27			RK73GB1J101J	CHIP R 100 J 1/16W	
R28			RK73GB1J222J	CHIP R 2.2K J 1/16W	
R31			RK73GB1J470J	CHIP R 47 J 1/16W	
R32			RK73GB1J473J	CHIP R 47K J 1/16W	
R36			RK73GB1J102J	CHIP R 1.0K J 1/16W	
R37 ,38			R92-1252-05	CHIP R 0 OHM	
R39			RK73GB1J101J	CHIP R 100 J 1/16W	
R40			RK73GB1J222J	CHIP R 2.2K J 1/16W	
R41			RK73GB1J154J	CHIP R 150K J 1/16W	
R42 -44			RK73GB1J222J	CHIP R 2.2K J 1/16W	
R45			RK73GB1J822J	CHIP R 8.2K J 1/16W	
R46			RK73GB1J100J	CHIP R 10 J 1/16W	
R47			RK73GB1J222J	CHIP R 2.2K J 1/16W	
R48			RK73GB1J560J	CHIP R 56 J 1/16W	
R49			RK73GB1J470J	CHIP R 47 J 1/16W	
R50			RK73GB1J152J	CHIP R 1.5K J 1/16W	
R51			RK73FB2A100J	CHIP R 10 J 1/10W	
R52			R92-0685-05	CHIP R 22 J 1/2W	
R54			RK73FB2A220J	CHIP R 22 J 1/10W	
R55			R92-0670-05	CHIP R 0 OHM	
R57			R92-1213-05	CHIP R 100 J 1/2W	
R58			RK73GB1J103J	CHIP R 10K J 1/16W	

TM-D700A/E

PARTS LIST

TX-RX UNIT (X57-586X-XX) 0-11:K 0-21:M4 2-71:E

Ref. No.	Address	New parts	Parts No.	Description				Destination
R60 ,61			RK73GB1J102J	CHIP R	1.0K	J	1/16W	
R62			RK73GB1J103J	CHIP R	10K	J	1/16W	
R63			RK73GB1J102J	CHIP R	1.0K	J	1/16W	
R64 ,65			RK73GB1J104J	CHIP R	100K	J	1/16W	
R67			R92-1252-05	CHIP R	0 OHM			
R100			RK73GH1J153D	CHIP R	15K	D	1/16W	E
R102			R92-1252-05	CHIP R	0 OHM			K, M4
R103			RK73GB1J223J	CHIP R	22K	J	1/16W	E
R105			RK73GB1J223J	CHIP R	22K	J	1/16W	E
R106			RK73GB1J472J	CHIP R	4.7K	J	1/16W	
R107			RK73GB1J474J	CHIP R	470K	J	1/16W	
R108			RK73GB1J223J	CHIP R	22K	J	1/16W	E
R109			R92-1252-05	CHIP R	0 OHM			K, M4
R110			RK73GB1J223J	CHIP R	22K	J	1/16W	E
R111			R92-1252-05	CHIP R	0 OHM			
R112			RK73GB1J101J	CHIP R	100	J	1/16W	
R113			RK73GH1J153D	CHIP R	15K	D	1/16W	E
R114			R92-1252-05	CHIP R	0 OHM		1/16W	
R116			RK73GB1J102J	CHIP R	1.0K	J	1/16W	
R117			RK73GH1J153D	CHIP R	15K	D	1/16W	
R118			R92-1252-05	CHIP R	0 OHM			
R119			RK73GB1J474J	CHIP R	470K	J	1/16W	
R120			RK73GB1J222J	CHIP R	2.2K	J	1/16W	
R121			RK73GB1J184J	CHIP R	180K	J	1/16W	
R122			RK73GB1J332J	CHIP R	3.3K	J	1/16W	
R123			RK73GB1J222J	CHIP R	2.2K	J	1/16W	
R124			RK73GB1J184J	CHIP R	180K	J	1/16W	
R125			RK73GB1J102J	CHIP R	1.0K	J	1/16W	
R126			RK73GB1J222J	CHIP R	2.2K	J	1/16W	
R127			RK73GH1J153D	CHIP R	15K	D	1/16W	
R128			RK73GB1J474J	CHIP R	470K	J	1/16W	
R129			RK73GB1J224J	CHIP R	220K	J	1/16W	
R130			RK73GB1J222J	CHIP R	2.2K	J	1/16W	
R131			R92-1252-05	CHIP R	0 OHM			
R132			RK73GB1J564J	CHIP R	560K	J	1/16W	
R133			RK73GB1J152J	CHIP R	1.5K	J	1/16W	
R134			RK73GB1J102J	CHIP R	1.0K	J	1/16W	
R135			RK73GB1J182J	CHIP R	1.8K	J	1/16W	
R136			RK73GB1J473J	CHIP R	47K	J	1/16W	
R137			RK73GB1J103J	CHIP R	10K	J	1/16W	
R138			RK73GB1J102J	CHIP R	1.0K	J	1/16W	
R139			RK73GB1J474J	CHIP R	470K	J	1/16W	
R140			RK73GB1J471J	CHIP R	470	J	1/16W	
R141			RK73GB1J104J	CHIP R	100K	J	1/16W	
R142			RK73GB1J392J	CHIP R	3.9K	J	1/16W	K, M4
R142			RK73GB1J562J	CHIP R	5.6K	J	1/16W	E
R143			RK73GB1J102J	CHIP R	1.0K	J	1/16W	
R145			RK73GB1J104J	CHIP R	100K	J	1/16W	
R146			RK73GB1J224J	CHIP R	220K	J	1/16W	
R147			RK73GB1J103J	CHIP R	10K	J	1/16W	
R148			RK73GB1J274J	CHIP R	270K	J	1/16W	
R149			RK73GB1J332J	CHIP R	3.3K	J	1/16W	
R150			RK73GB1J392J	CHIP R	3.9K	J	1/16W	
R151			RK73GB1J333J	CHIP R	33K	J	1/16W	
R152			RK73GB1J472J	CHIP R	4.7K	J	1/16W	
R153,154			RK73GB1J473J	CHIP R	47K	J	1/16W	
R155			RK73GB1J101J	CHIP R	100	J	1/16W	
R156			RK73GB1J152J	CHIP R	1.5K	J	1/16W	
R158			RK73GB1J471J	CHIP R	470	J	1/16W	
R163			RK73GB1J180J	CHIP R	18	J	1/16W	

Ref. No.	Address	New parts	Parts No.	Description				Destination
R165			RK73GB1J563J	CHIP R	56K	J	1/16W	
R166			RK73GB1J223J	CHIP R	22K	J	1/16W	
R167			RK73GB1J473J	CHIP R	47K	J	1/16W	
R168			RK73GB1J151J	CHIP R	150	J	1/16W	
R169			RK73GB1J332J	CHIP R	3.3K	J	1/16W	
R200			RK73GB1J101J	CHIP R	100	J	1/16W	
R201			RK73GB1J472J	CHIP R	4.7K	J	1/16W	
R202			RK73GB1J222J	CHIP R	2.2K	J	1/16W	
R203,204			RK73GB1J221J	CHIP R	220	J	1/16W	
R205			RK73GB1J101J	CHIP R	100	J	1/16W	
R206			RK73GB1J222J	CHIP R	2.2K	J	1/16W	
R207			RK73GB1J104J	CHIP R	100K	J	1/16W	
R208,209			RK73GB1J222J	CHIP R	2.2K	J	1/16W	
R212			R92-1252-05	CHIP R	0 OHM			
R215			RK73GB1J184J	CHIP R	180K	J	1/16W	
R216			RK73GB1J471J	CHIP R	470	J	1/16W	
R217			RK73GB1J101J	CHIP R	100	J	1/16W	
R220			RK73GB1J683J	CHIP R	68K	J	1/16W	
R221			RK73GB1J104J	CHIP R	100K	J	1/16W	
R226			RK73GB1J222J	CHIP R	2.2K	J	1/16W	
R227			RK73GB1J104J	CHIP R	100K	J	1/16W	
R228			RK73GB1J221J	CHIP R	220	J	1/16W	
R229			RK73GB1J473J	CHIP R	47K	J	1/16W	
R230			RK73GB1J102J	CHIP R	1.0K	J	1/16W	
R231			RK73GB1J104J	CHIP R	100K	J	1/16W	
R232			RK73GB1J472J	CHIP R	4.7K	J	1/16W	
R233			RK73GB1J471J	CHIP R	470	J	1/16W	
R234,235			RK73GB1J222J	CHIP R	2.2K	J	1/16W	
R236			RK73GB1J221J	CHIP R	220	J	1/16W	
R237			RK73GB1J103J	CHIP R	10K	J	1/16W	
R238			RK73GB1J221J	CHIP R	220	J	1/16W	
R239			RK73GB1J101J	CHIP R	100	J	1/16W	
R240			R92-1252-05	CHIP R	0 OHM			
R242			RK73GB1J683J	CHIP R	68K	J	1/16W	
R244			R92-1252-05	CHIP R	0 OHM			
R247			RK73GB1J222J	CHIP R	2.2K	J	1/16W	
R249			R92-1213-05	CHIP R	100	J	1/2W	
R250			RK73FB2A220J	CHIP R	22	J	1/10W	
R251			RK73GB1J103J	CHIP R	10K	J	1/16W	
R252			RK73GB1J102J	CHIP R	1.0K	J	1/16W	
R253			RK73GB1J683J	CHIP R	68K	J	1/16W	
R254-256			RK73GB1J103J	CHIP R	10K	J	1/16W	
R257,258			RK73GB1J473J	CHIP R	47K	J	1/16W	
R259			R92-1252-05	CHIP R	0 OHM			
R260			RK73GB1J470J	CHIP R	47	J	1/16W	
R261			RK73GB1J184J	CHIP R	180K	J	1/16W	
R262,263			RK73GB1J103J	CHIP R	10K	J	1/16W	
R264			RK73GB1J222J	CHIP R	2.2K	J	1/16W	
R265			RK73GB1J473J	CHIP R	47K	J	1/16W	
R266			RK73GB1J222J	CHIP R	2.2K	J	1/16W	
R267			RK73GB1J104J	CHIP R	100K	J	1/16W	
R268-270			R92-1252-05	CHIP R	0 OHM			
R271			RK73GB1J271J	CHIP R	270	J	1/16W	
R300			RK73GB1J104J	CHIP R	100K	J	1/16W	
R301			RK73GB1J333J	CHIP R	33K	J	1/16W	
R302			RK73GB1J154J	CHIP R	150K	J	1/16W	
R303,304			RK73GB1J473J	CHIP R	47K	J	1/16W	
R305			RK73GB1J224J	CHIP R	220K	J	1/16W	
R306,307			RK73GB1J473J	CHIP R	47K	J	1/16W	
R310			RK73GB1J220J	CHIP R	22	J	1/16W	

PARTS LIST

TX-RX UNIT (X57-586X-XX) 0-11:K 0-21:M4 2-71:

Ref. No.	Address	New parts	Parts No.	Description				Destination
R311			RK73GB1J473J	CHIP R	47K	J	1/16W	
R312			RK73GB1J471J	CHIP R	470	J	1/16W	
R313-315			RK73GB1J102J	CHIP R	1.0K	J	1/16W	
R316-318			RK73GB1J103J	CHIP R	10K	J	1/16W	
R319			RK73GB1J472J	CHIP R	4.7K	J	1/16W	
R320			RK73GB1J101J	CHIP R	100	J	1/16W	
R321,322			RK73GB1J152J	CHIP R	1.5K	J	1/16W	
R323			RK73GB1J391J	CHIP R	390	J	1/16W	
R324			RK73GB1J102J	CHIP R	1.0K	J	1/16W	
R325			RK73GB1J473J	CHIP R	47K	J	1/16W	
R326			RK73GB1J102J	CHIP R	1.0K	J	1/16W	
R327			RK73GB1J104J	CHIP R	100K	J	1/16W	
R329			RK73GB1J332J	CHIP R	3.3K	J	1/16W	
R330			RK73GB1J470J	CHIP R	47	J	1/16W	
R331			RK73GB1J102J	CHIP R	1.0K	J	1/16W	
R332			RK73GB1J182J	CHIP R	1.8K	J	1/16W	
R333			RK73GB1J822J	CHIP R	8.2K	J	1/16W	
R334			RK73GB1J271J	CHIP R	270	J	1/16W	
R335			RK73GB1J102J	CHIP R	1.0K	J	1/16W	
R336			RK73GB1J101J	CHIP R	100	J	1/16W	
R337			RK73GB1J222J	CHIP R	2.2K	J	1/16W	
R338			RK73GB1J224J	CHIP R	220K	J	1/16W	
R339			RK73GB1J222J	CHIP R	2.2K	J	1/16W	
R340			R92-1252-05	CHIP R	0 OHM			
R341			RK73GB1J101J	CHIP R	100	J	1/16W	
R342-344			RK73GB1J222J	CHIP R	2.2K	J	1/16W	
R345			RK73GB1J102J	CHIP R	1.0K	J	1/16W	
R346			RK73GB1J122J	CHIP R	1.2K	J	1/16W	
R347			RK73GB1J222J	CHIP R	2.2K	J	1/16W	
R348			RK73GB1J822J	CHIP R	8.2K	J	1/16W	
R349			RK73GB1J101J	CHIP R	100	J	1/16W	
R350			RK73GB1J102J	CHIP R	1.0K	J	1/16W	
R351			RK73GB1J470J	CHIP R	47	J	1/16W	
R352			RK73GB1J101J	CHIP R	100	J	1/16W	
R353			RK73GB1J334J	CHIP R	330K	J	1/16W	
R354			RK73GB1J471J	CHIP R	470	J	1/16W	
R355			RK73GB1J221J	CHIP R	220	J	1/16W	
R356			RK73GB1J4R7J	CHIP R	4.7	J	1/16W	
R357			RK73GB1J100J	CHIP R	10	J	1/16W	
R358			RK73GB1J222J	CHIP R	2.2K	J	1/16W	
R359			RK73GB1J681J	CHIP R	680	J	1/16W	
R360			RK73GB1J331J	CHIP R	330	J	1/16W	
R361			RK73GB1J152J	CHIP R	1.5K	J	1/16W	
R363			R92-1217-05	CHIP R	0 OHM			
R364			R92-0670-05	CHIP R	0 OHM			
R366			R92-0670-05	CHIP R	0 OHM			
R368			R92-1213-05	CHIP R	100	J	1/2W	
R369,370			RK73GB1J103J	CHIP R	10K	J	1/16W	
R371			RK73GB1J560J	CHIP R	56	J	1/16W	
R379			RK73GB1J221J	CHIP R	220	J	1/16W	
R380			RK73GB1J223J	CHIP R	22K	J	1/16W	
R381			RK73GB1J152J	CHIP R	1.5K	J	1/16W	
R382			RK73GB1J331J	CHIP R	330	J	1/16W	
R383			RK73GB1J474J	CHIP R	470K	J	1/16W	
R384			RK73GB1J102J	CHIP R	1.0K	J	1/16W	
R385,386			RK73GB1J104J	CHIP R	100K	J	1/16W	
R400			RK73GH1J153D	CHIP R	15K	D	1/16W	E
R401			R92-1252-05	CHIP R	0 OHM			K, M4
R402-405			RK73GB1J223J	CHIP R	22K	J	1/16W	E
R406			R92-1252-05	CHIP R	0 OHM			K, M4

Ref. No.	Address	New parts	Parts No.	Description				Destination
R407			RK73GH1J153D	CHIP R	15K	D	1/16W	E
R408			RK73GB1J103J	CHIP R	10K	J	1/16W	
R409			RK73GB1J102J	CHIP R	1.0K	J	1/16W	
R410,411			RK73GB1J184J	CHIP R	180K	J	1/16W	
R413			R92-1252-05	CHIP R	0 OHM			
R414			RK73GB1J222J	CHIP R	2.2K	J	1/16W	
R415			RK73GB1J223J	CHIP R	22K	J	1/16W	
R417			RK73GB1J474J	CHIP R	470K	J	1/16W	
R418			RK73GB1J102J	CHIP R	1.0K	J	1/16W	
R419			RK73GB1J392J	CHIP R	3.9K	J	1/16W	
R420			R92-1252-05	CHIP R	0 OHM			
R422			RK73GB1J103J	CHIP R	10K	J	1/16W	
R423			R92-1252-05	CHIP R	0 OHM			
R425			RK73GB1J274J	CHIP R	270K	J	1/16W	
R426			RK73GB1J471J	CHIP R	470	J	1/16W	
R427			RK73GB1J392J	CHIP R	3.9K	J	1/16W	
R428			RK73GB1J472J	CHIP R	4.7K	J	1/16W	
R429,430			RK73GB1J473J	CHIP R	47K	J	1/16W	
R433			RK73GB1J102J	CHIP R	1.0K	J	1/16W	
R434			RK73GB1J104J	CHIP R	100K	J	1/16W	
R438			RK73GB1J681J	CHIP R	680	J	1/16W	
R500,501			RK73GB1J222J	CHIP R	2.2K	J	1/16W	
R502			RK73GB1J472J	CHIP R	4.7K	J	1/16W	
R503			R92-1252-05	CHIP R	0 OHM			
R504			RK73GB1J101J	CHIP R	100	J	1/16W	
R505			RK73GB1J272J	CHIP R	2.7K	J	1/16W	
R506			RK73GB1J101J	CHIP R	100	J	1/16W	
R507			RK73GB1J472J	CHIP R	4.7K	J	1/16W	
R508			RK73GB1J222J	CHIP R	2.2K	J	1/16W	
R509,510			RK73GB1J221J	CHIP R	220	J	1/16W	
R511			RK73GB1J151J	CHIP R	150	J	1/16W	
R512			RK73GB1J101J	CHIP R	100	J	1/16W	
R513,514			RK73GB1J222J	CHIP R	2.2K	J	1/16W	
R516			RK73GB1J222J	CHIP R	2.2K	J	1/16W	
R517			RK73GB1J221J	CHIP R	220	J	1/16W	
R518			RK73GB1J222J	CHIP R	2.2K	J	1/16W	
R519			RK73GB1J221J	CHIP R	220	J	1/16W	
R520			RK73GB1J101J	CHIP R	100	J	1/16W	
R521			RK73GB1J471J	CHIP R	470	J	1/16W	
R522			RK73GB1J220J	CHIP R	22	J	1/16W	
R523			RK73GB1J334J	CHIP R	330K	J	1/16W	
R524,525			RK73GB1J222J	CHIP R	2.2K	J	1/16W	
R526			RK73GB1J101J	CHIP R	100	J	1/16W	
R527			RK73GB1J470J	CHIP R	47	J	1/16W	
R528			RK73GB1J101J	CHIP R	100	J	1/16W	
R529			RK73GB1J222J	CHIP R	2.2K	J	1/16W	
R530			RK73GB1J101J	CHIP R	100	J	1/16W	
R531-533			RK73GB1J222J	CHIP R	2.2K	J	1/16W	
R535			RK73GB1J472J	CHIP R	4.7K	J	1/16W	
R537			RK73GB1J221J	CHIP R	220	J	1/16W	
R538			RK73GB1J101J	CHIP R	100	J	1/16W	
R539			RK73GB1J823J	CHIP R	82K	J	1/16W	
R540			RK73GB1J184J	CHIP R	180K	J	1/16W	
R543			RK73GB1J222J	CHIP R	2.2K	J	1/16W	
R544			RK73GB1J472J	CHIP R	4.7K	J	1/16W	
R545			RK73GB1J103J	CHIP R	10K	J	1/16W	
R546			R92-1252-05	CHIP R	0 OHM			
R547			RK73GB1J184J	CHIP R	180K	J	1/16W	
R548			RK73GB1J823J	CHIP R	82K	J	1/16W	
R549			R92-1252-05	CHIP R	0 OHM			

TM-D700A/E

PARTS LIST

TX-RX UNIT (X57-586X-XX) 0-11:K 0-21:M4 2-71:E

Ref. No.	Address	New parts	Parts No.	Description				Destination
R550			RK73GB1J332J	CHIP R	3.3K	J	1/16W	
R551			RK73GB1J220J	CHIP R	22	J	1/16W	
R552			RK73GB1J104J	CHIP R	100K	J	1/16W	
R553			RK73GB1J101J	CHIP R	100	J	1/16W	
R554			RK73GB1J102J	CHIP R	1.0K	J	1/16W	
R600			RK73GB1J101J	CHIP R	100	J	1/16W	
R601,602			R92-1252-05	CHIP R	0 OHM			
R603			RK73GB1J101J	CHIP R	100	J	1/16W	
R604-634			R92-1252-05	CHIP R	0 OHM			K, M4
R609-634			R92-1252-05	CHIP R	0 OHM			E
R635			RK73GB1J474J	CHIP R	470K	J	1/16W	
R636			RK73GB1J223J	CHIP R	22K	J	1/16W	
R637-641			RK73GB1J102J	CHIP R	1.0K	J	1/16W	
R642-644			RK73GB1J473J	CHIP R	47K	J	1/16W	
R645			RK73GB1J563J	CHIP R	56K	J	1/16W	
R646			RK73GB1J223J	CHIP R	22K	J	1/16W	
R647			RK73GB1J104J	CHIP R	100K	J	1/16W	
R648			RK73GB1J102J	CHIP R	1.0K	J	1/16W	
R650-656			RK73GB1J473J	CHIP R	47K	J	1/16W	
R658			R92-1252-05	CHIP R	0 OHM			
R659			R92-0670-05	CHIP R	0 OHM			
R661			R92-0670-05	CHIP R	0 OHM			E
R661,662			R92-0670-05	CHIP R	0 OHM			K
R663			RK73GB1J103J	CHIP R	10K	J	1/16W	
R664,665			RK73GB1J102J	CHIP R	1.0K	J	1/16W	
R666			RK73GB1J473J	CHIP R	47K	J	1/16W	
R668			RK73GB1J473J	CHIP R	47K	J	1/16W	
R669			RK73GB1J472J	CHIP R	4.7K	J	1/16W	
R670			R92-1252-05	CHIP R	0 OHM			
R672,673			RK73GB1J474J	CHIP R	470K	J	1/16W	
R674			R92-0670-05	CHIP R	0 OHM			M4, E
R675			R92-0670-05	CHIP R	0 OHM			
R676			RK73GB1J473J	CHIP R	47K	J	1/16W	
R678			RK73GB1J473J	CHIP R	47K	J	1/16W	
R679			RK73GB1J821J	CHIP R	820	J	1/16W	
R680,681			R92-1252-05	CHIP R	0 OHM			
R682			RK73GB1J182J	CHIP R	1.8K	J	1/16W	
R683-687			RK73GB1J473J	CHIP R	47K	J	1/16W	
R688			RK73GB1J102J	CHIP R	1.0K	J	1/16W	
R689			RK73GB1J474J	CHIP R	470K	J	1/16W	
R690			R92-1252-05	CHIP R	0 OHM			
R700-702			RK73GB1J104J	CHIP R	100K	J	1/16W	
R703,704			RK73GB1J223J	CHIP R	22K	J	1/16W	
R705			RK73GB1J474J	CHIP R	470K	J	1/16W	
R706			RK73GB1J104J	CHIP R	100K	J	1/16W	
R707			RK73GB1J394J	CHIP R	390K	J	1/16W	
R708			RK73GB1J823J	CHIP R	82K	J	1/16W	
R709-711			RK73GB1J102J	CHIP R	1.0K	J	1/16W	
R712			RK73GB1J824J	CHIP R	820K	J	1/16W	
R713,714			RK73GB1J102J	CHIP R	1.0K	J	1/16W	
R715			RK73GB1J184J	CHIP R	180K	J	1/16W	
R716			RK73GB1J474J	CHIP R	470K	J	1/16W	
R717			RK73GB1J184J	CHIP R	180K	J	1/16W	
R718			RK73GB1J223J	CHIP R	22K	J	1/16W	
R719			RK73GB1J224J	CHIP R	220K	J	1/16W	
R720			RK73GB1J102J	CHIP R	1.0K	J	1/16W	
R721			RK73GB1J332J	CHIP R	3.3K	J	1/16W	
R722			RK73GB1J103J	CHIP R	10K	J	1/16W	
R723			RK73GB1J102J	CHIP R	1.0K	J	1/16W	
R724			RK73GB1J472J	CHIP R	4.7K	J	1/16W	

Ref. No.	Address	New parts	Parts No.	Description				Destination
R725			RK73GB1J224J	CHIP R	220K	J	1/16W	
R726			RK73GB1J102J	CHIP R	1.0K	J	1/16W	
R727			RK73GB1J332J	CHIP R	3.3K	J	1/16W	
R728,729			RK73GB1J102J	CHIP R	1.0K	J	1/16W	
R730			RK73GB1J154J	CHIP R	150K	J	1/16W	
R731			RK73GB1J104J	CHIP R	100K	J	1/16W	
R732			RK73GB1J224J	CHIP R	220K	J	1/16W	
R733			R92-1252-05	CHIP R	0 OHM			
R734			RK73GB1J100J	CHIP R	10	J	1/16W	
R735			RK73GB1J103J	CHIP R	10K	J	1/16W	
R736			RK73GB1J474J	CHIP R	470K	J	1/16W	
R737			RK73GB1J104J	CHIP R	100K	J	1/16W	
R738,739			R92-1252-05	CHIP R	0 OHM			
R740-743			RK73GB1J103J	CHIP R	10K	J	1/16W	
R744-747			RK73GB1J104J	CHIP R	100K	J	1/16W	
R748			RK73GB1J472J	CHIP R	4.7K	J	1/16W	
R749			RK73GB1J474J	CHIP R	470K	J	1/16W	
R800-802			R92-1252-05	CHIP R	0 OHM			
R803-805			RK73GB1J102J	CHIP R	1.0K	J	1/16W	
R806			RK73GB1J473J	CHIP R	47K	J	1/16W	
R807			RK73GB1J102J	CHIP R	1.0K	J	1/16W	
R808			RK73GH1J153D	CHIP R	15K	D	1/16W	
R810			RK73GB1J330J	CHIP R	33	J	1/16W	
R811			RK73GH1J153D	CHIP R	15K	D	1/16W	
R812			RK73GB1J473J	CHIP R	47K	J	1/16W	
R813			RK73GB1J474J	CHIP R	470K	J	1/16W	
R814			RK73GB1J104J	CHIP R	100K	J	1/16W	
R815			RK73GB1J821J	CHIP R	820	J	1/16W	
R816			RK73GB1J183J	CHIP R	18K	J	1/16W	
R817			RK73GB1J333J	CHIP R	33K	J	1/16W	
R819			RK73GB1J104J	CHIP R	100K	J	1/16W	
R821			RK73GB1J223J	CHIP R	22K	J	1/16W	
R822			R92-1252-05	CHIP R	0 OHM			
R823			RK73GB1J471J	CHIP R	470	J	1/16W	
R824			RK73GH1J163D	CHIP R	16K	D	1/16W	
R825			RK73GH1J153D	CHIP R	15K	D	1/16W	
R826			RK73GB1J754J	CHIP R	750K	J	1/16W	
R827			RK73GH1J153D	CHIP R	15K	D	1/16W	K, M4
R827			RK73GH1J224D	CHIP R	220K	D	1/16W	E
R828			RK73GB1J103J	CHIP R	10K	J	1/16W	K
R828			RK73GB1J333J	CHIP R	33K	J	1/16W	E, M4
R829			RK73GB1J152J	CHIP R	1.5K	J	1/16W	
R830			RK73GB1J274J	CHIP R	270K	J	1/16W	K, M4
R830			RK73GB1J684J	CHIP R	680K	J	1/16W	E
R831			RK73GB1J391J	CHIP R	390	J	1/16W	K, M4
R831			RK73GB1J222J	CHIP R	2.2K	J	1/16W	E
R832			RK73GB1J473J	CHIP R	47K	J	1/16W	
R834			RK73GB1J473J	CHIP R	47K	J	1/16W	
R835			RK73GB1J185J	CHIP R	1.8M	J	1/16W	
R836			RK73GB1J103J	CHIP R	10K	J	1/16W	
R837			RK73GB1J473J	CHIP R	47K	J	1/16W	
R839			RK73GB1J473J	CHIP R	47K	J	1/16W	
R840			RK73GB1J185J	CHIP R	1.8M	J	1/16W	
R841			RK73GB1J103J	CHIP R	10K	J	1/16W	
R842			R92-1252-05	CHIP R	0 OHM			
R843			RK73GB1J102J	CHIP R	1.0K	J	1/16W	
R846			RK73GB1J224J	CHIP R	220K	J	1/16W	
R849			RK73GB1J224J	CHIP R	220K	J	1/16W	
R850			RK73GB1J224J	CHIP R	220K	J	1/16W	
R851-853			RK73GB1J102J	CHIP R	1.0K	J	1/16W	

PARTS LIST

TX-RX UNIT (X57-586X-XX) 0-11:K 0-21:M4 2-71:

Ref. No.	Address	New parts	Parts No.	Description	Destination
R854			RK73GB1J122J	CHIP R 1.2K J 1/16W	
R855			RK73GB1J821J	CHIP R 820 J 1/16W	
R856			RK73GB1J683J	CHIP R 68K J 1/16W	
R857,858			RK73GB1J223J	CHIP R 22K J 1/16W	
R859			RK73GB1J103J	CHIP R 10K J 1/16W	
R860			RK73GB1J223J	CHIP R 22K J 1/16W	
R861			RK73GB1J473J	CHIP R 47K J 1/16W	
R862,863			RK73GB1J103J	CHIP R 10K J 1/16W	
R864,865			RK73GB1J473J	CHIP R 47K J 1/16W	
R866			R92-1252-05	CHIP R 0 OHM	
R867,868			RK73GB1J4R7J	CHIP R 4.7 J 1/16W	
R869			R92-1252-05	CHIP R 0 OHM	
R870			RK73GB1J474J	CHIP R 470K J 1/16W	
R871			RK73GB1J473J	CHIP R 47K J 1/16W	
R872			RK73GB1J471J	CHIP R 470 J 1/16W	
R873			RK73GB1J473J	CHIP R 47K J 1/16W	
R874			R92-1252-05	CHIP R 0 OHM	
R875			RK73GB1J682J	CHIP R 6.8K J 1/16W	
R876,877			RK73GB1J103J	CHIP R 10K J 1/16W	
R878			RK73GB1J473J	CHIP R 47K J 1/16W	
R880			RK73GB1J103J	CHIP R 10K J 1/16W	
R881			RK73GB1J223J	CHIP R 22K J 1/16W	
R882			RK73GB1J473J	CHIP R 47K J 1/16W	
R883			RK73GB1J223J	CHIP R 22K J 1/16W	
R884,885			R92-1252-05	CHIP R 0 OHM	
R886			RK73GB1J103J	CHIP R 10K J 1/16W	
R887			R92-1252-05	CHIP R 0 OHM	
R888			RK73GB1J124J	CHIP R 120K J 1/16W	K, M4
R888			RK73GB1J334J	CHIP R 330K J 1/16W	E
R889			R92-1252-05	CHIP R 0 OHM	
R890,891			RK73GB1J683J	CHIP R 68K J 1/16W	
R892			RK73GB1J223J	CHIP R 22K J 1/16W	
R900			R92-0685-05	CHIP R 22 J 1/2W	
R902,903			RK73GB1J102J	CHIP R 1.0K J 1/16W	
R904-911			RK73GB1J472J	CHIP R 4.7K J 1/16W	
R912			RK73GB1J182J	CHIP R 1.8K J 1/16W	
R913			RK73GB1J103J	CHIP R 10K J 1/16W	
R914			RK73GB1J182J	CHIP R 1.8K J 1/16W	
R915			RK73GB1J103J	CHIP R 10K J 1/16W	
R916,917			RK73GB1J102J	CHIP R 1.0K J 1/16W	
R918,919			RK73GB1J103J	CHIP R 10K J 1/16W	
R920			R92-1276-05	CHIP R 820 J 1/4W	
R921,922			RK73GB1J102J	CHIP R 1.0K J 1/16W	
R926			RK73GB1J472J	CHIP R 4.7K J 1/16W	
R927			RK73GH1J153D	CHIP R 15K D 1/16W	
S600			S70-0446-05	TACT SWITCH	
D1 ,2			HVC350B	VARIABLE CAPACITANCE DIODE	
D3			MA2S111	DIODE	
D4			DA221	DIODE	
D5			MA2S111	DIODE	
D6			DAN222	DIODE	
D7			DAN235E	DIODE	
D9			DAN235E	DIODE	
D11			HSC277	DIODE	
D12			1SS355	DIODE	
D13			DA221	DIODE	
D14 ,15			MA4PH633	DIODE	
D16			XB15A709	DIODE	
D17			HVU131	DIODE	
D18 ,19			MA742	DIODE	

Ref. No.	Address	New parts	Parts No.	Description	Destination
D100,101			DAN235E	DIODE	E
D102			RB706F-40	DIODE	
D200,201			HSC277	DIODE	
D202			HVC350B	VARIABLE CAPACITANCE DIODE	
D203,204			HSC277	DIODE	
D205,206			HVC350B	VARIABLE CAPACITANCE DIODE	
D207-209			HSC277	DIODE	
D210,211			MA742	DIODE	
D213,214			MA2S111	DIODE	
D216			HVC350B	VARIABLE CAPACITANCE DIODE	
D217			MA2S111	DIODE	
D300,301			HVC350B	VARIABLE CAPACITANCE DIODE	
D302			MA2S111	DIODE	
D303			DA221	DIODE	
D304			MA2S111	DIODE	
D305,306			HSC277	DIODE	
D307			DAN235E	DIODE	
D309			DAN222	DIODE	
D310			DAN235E	DIODE	
D312			DA221	DIODE	
D313			HVU131	DIODE	
D314			MA4PH633	DIODE	
D315			HVU131	DIODE	
D316			XB15A709	DIODE	
D317,318			MA742	DIODE	
D400,401			DAN235E	DIODE	E
D500			DAN235E	DIODE	
D502			HSC277	DIODE	
D503			DAN235E	DIODE	
D505			DAN235E	DIODE	
D507			HSC277	DIODE	
D509,510			HVC131	DIODE	
D600			MA2S111	DIODE	
D601			015AZ5.6	ZENER DIODE	
D602			MA2S111	DIODE	
D604			DTZ7.5(B)	ZENER DIODE	
D605			MA2S111	DIODE	
D606,607			MA728	DIODE	
D700			MA2S111	DIODE	
D701			1SS355	DIODE	
D702			DA221	DIODE	
D703			DA221	DIODE	
D800			1SS355	DIODE	
D801			DAN222	DIODE	
D803			DA221	DIODE	
D900			DAN222	DIODE	
D902			UDZ10(B)	ZENER DIODE	
D903			UDZ18(B)	ZENER DIODE	
D904,905			DSM3MA1	DIODE	
IC1			MB1511PFV-GBND	IC(PLL FREQUENCY SYNTHESIZER)	
IC2			KCH38	(VHF VCO)	
IC3			M67746	POWER MODULE(VHF 50W)	
IC4			M57788MR-24	POWER MODULE(UHF 35W)	
IC100			TA31136FN	IC(FM IF DETECTOR)	
IC101			TC4W53FU	IC(2 INPUT NAND GATE)	
IC200			TA75S01F	IC(APC)	
IC300			NJM2904V	IC(AMP)	
IC301			MB1511PFV-GBND	IC(PLL FREQUENCY SYNTHESIZER)	
IC302			KCH28	(UHF VCO)	
IC303			UPB1509GV	IC(PRESCALER)	

TM-D700A/E

PARTS LIST

TX-RX UNIT (X57-586X-XX) 0-11:K 0-21:M4 2-71:E

Ref. No.	Address	New parts	Parts No.	Description	Destination
IC304			TC7S66FU	IC(ANALOG SWITCH)	
IC400			TA31136FN	IC(FM IF DETECTOR)	
IC501			TA4002F	BI-POLAR IC	
IC600			ADM202EARU	IC(RS232C DRIVER)	
IC600			ADM3202ARU	IC(RS232C DRIVER)	
IC601			PST9130NR	IC(SYSTEM RESET)	
IC602			AT25128N10SI27	IC(EEPROM)	
IC603			NJM78L05UA	IC(VOLTAGE REGULATOR/ +5V)	
IC604			78F4218GCJVYC	IC(CPU)	K
IC604			78F4218GCJVZC	IC(CPU)	E, M4
IC700			LC73881M	IC(DTMF DECODER)	
IC701			NJM2904V	IC(FILTER)	
IC702			BU8241FS	IC(CROSS POINT SWITCH)	
IC703			TC74HC4050AFT	IC(BUFFER)	
IC800			TC75S59F	IC(COMPARATOR)	
IC801			NJM2100V	IC(MIC AMP)	
IC802			TA75S01F	IC(AF AMP)	
IC803			BU4066BCFV	IC(ANALOG SWITCH X4)	
IC804			M62364FP	IC(D/A CONVERTER)	
IC805			NJM2904V	IC(DC AMP)	
IC806			LA4446	IC(AF POWER AMP)	
IC807,808			TC4W53FU	IC(2 INPUT NAND GATE)	
IC900,901			BU2099FV	MOS IC	
IC903			TA7808SV	IC(REGULATOR)	
IC904			TA7805F	IC(REGULATOR)	
Q1			2SA1774(S)	TRANSISTOR	
Q2			2SC4617(R)	TRANSISTOR	
Q3			2SC5108(Y)	TRANSISTOR	
Q4			2SC4617(R)	TRANSISTOR	
Q6 ,7			2SC5108(Y)	TRANSISTOR	
Q8			2SC3357	TRANSISTOR	
Q9			2SC2954	TRANSISTOR	
Q10		*	2SJ484	FET	
Q11			DTC114EE	DIGITAL TRANSISTOR	
Q100			2SJ243	FET	E
Q101			2SK1824	FET	E
Q102			2SC4649(N,P)	TRANSISTOR	
Q103			UMC4	TRANSISTOR	
Q104			DTA114EE	DIGITAL TRANSISTOR	
Q105-108			2SC4617(R)	TRANSISTOR	
Q110,111			2SC4617(R)	TRANSISTOR	
Q112			2SC5108(Y)	TRANSISTOR	
Q113			2SC4617(R)	TRANSISTOR	
Q200,201			2SK302(GR)	FET	
Q202,203			3SK239A	FET	
Q204			2SK1824	FET	
Q205			3SK239A	FET	
Q207			2SK1824	FET	
Q208			2SB1565(E,F)	TRANSISTOR	
Q209			2SC4617(R)	TRANSISTOR	
Q210			2SC5066(O)	TRANSISTOR	
Q300			2SA1774(S)	TRANSISTOR	
Q301			2SC4617(R)	TRANSISTOR	
Q302			2SC5108(Y)	TRANSISTOR	
Q303			2SC4617(R)	TRANSISTOR	
Q304			2SC5108(Y)	TRANSISTOR	
Q305			2SC5066(O)	TRANSISTOR	
Q306			UMC4	TRANSISTOR	
Q307			2SC4093(R27)	TRANSISTOR	
Q308			2SC5108(Y)	TRANSISTOR	

Ref. No.	Address	New parts	Parts No.	Description	Destination
Q309			2SC3357	TRANSISTOR	
Q310			2SC2954	TRANSISTOR	
Q400			2SJ243	FET	E
Q401			2SK1824	FET	E
Q402			2SC4617(R)	TRANSISTOR	
Q404			UMC4	TRANSISTOR	
Q405			2SC4617(R)	TRANSISTOR	
Q406			2SC5108(Y)	TRANSISTOR	
Q500			2SC4997	TRANSISTOR	
Q501,502			2SK302(GR)	FET	
Q503			3SK239A	FET	
Q505			2SK1875(V)	FET	
Q506			2SC5108(Y)	TRANSISTOR	
Q507,508			3SK239A	FET	
Q509			2SC5066(O)	TRANSISTOR	
Q600			DTA144EE	DIGITAL TRANSISTOR	
Q601			2SC4617(R)	TRANSISTOR	
Q603			DTA144EE	DIGITAL TRANSISTOR	
Q604			2SC4617(R)	TRANSISTOR	
Q700,701			2SC4617(R)	TRANSISTOR	
Q702			2SA1774(S)	TRANSISTOR	
Q800			2SC4919	TRANSISTOR	
Q801,802			2SC4617(S)	TRANSISTOR	
Q803-805			2SK1824	FET	
Q807			2SK1824	FET	
Q900			DTD143EK	DIGITAL TRANSISTOR	
Q903,904			2SB1132(Q,R)	TRANSISTOR	
Q905-909			FMA5	TRANSISTOR	
Q910			2SC4617(R)	TRANSISTOR	
Q911			2SB1132(Q,R)	TRANSISTOR	
Q912			2SB1386(R)	TRANSISTOR	
Q913,914			DTC114EE	DIGITAL TRANSISTOR	
TH1			157-153-65001	THERMISTOR	
BA600			W09-0570-05	LITHIUM CELL	

EXPLODED VIEW

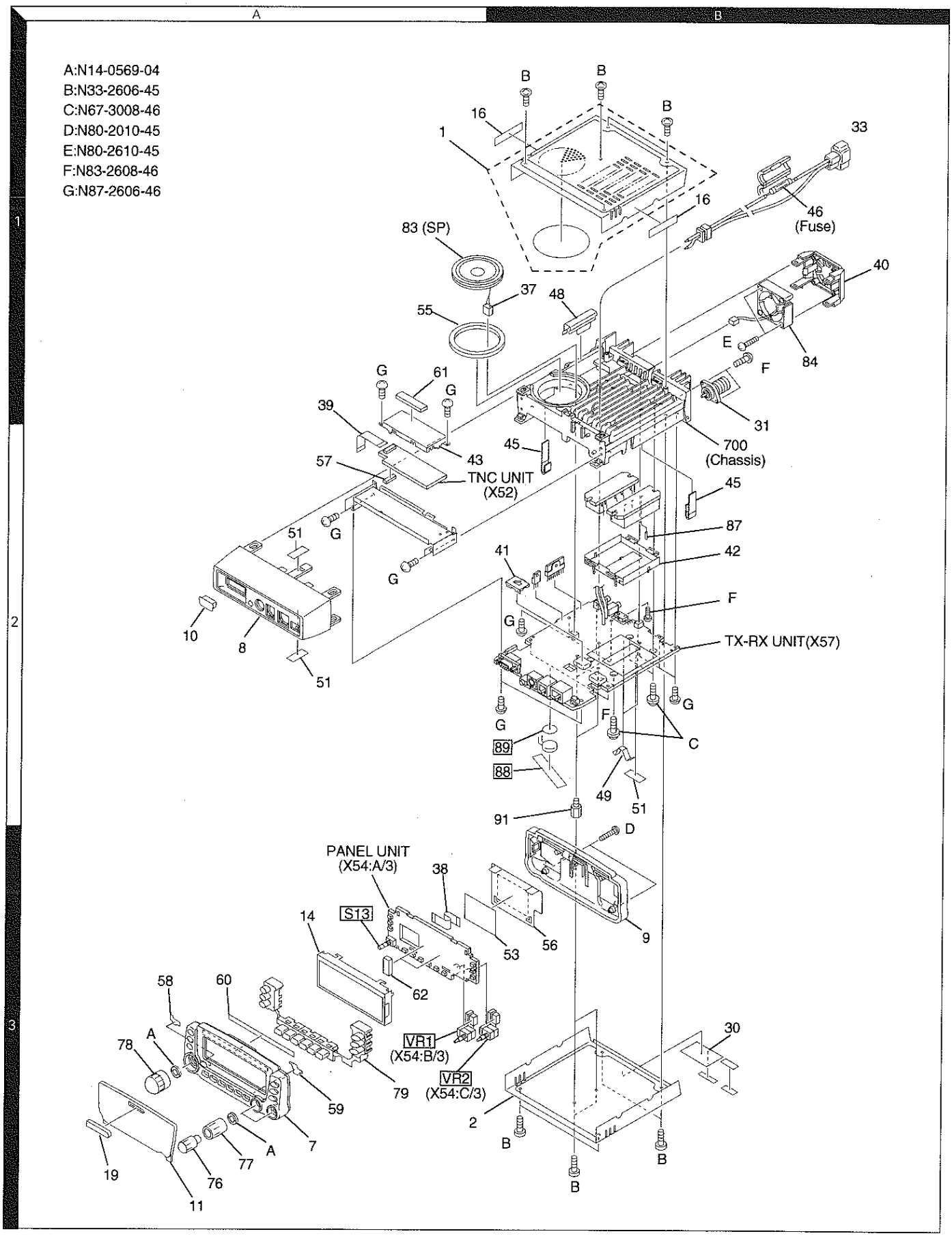

Parts with the exploded numbers larger than 700 are not supplied.

TM-D700A/E

PACKING

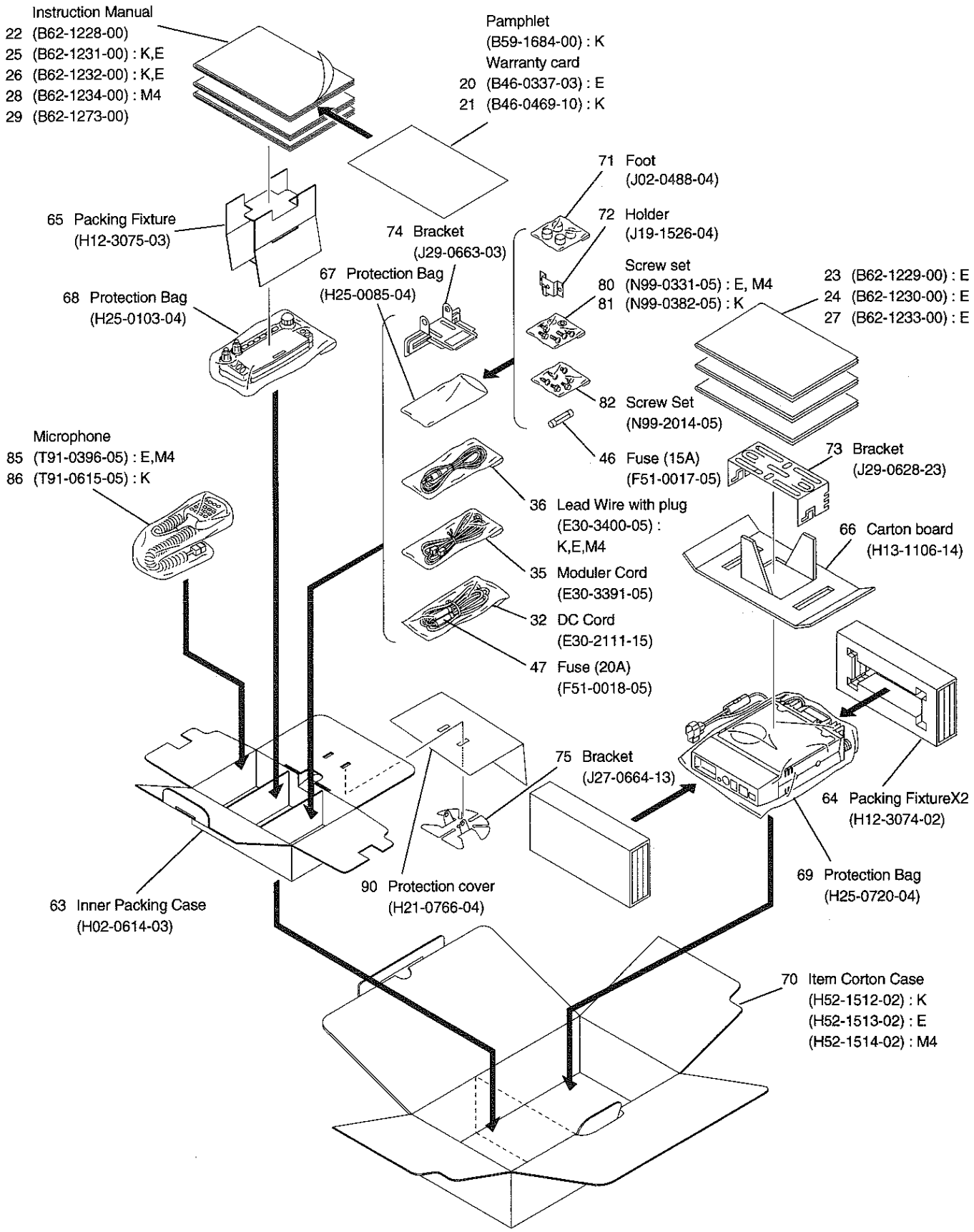

ADJUSTMENT

Measuring Equipment for Adjustment

1. **Digital voltmeter (D.V.M)**
   Input impedance: High
2. **RF valve voltmeter (RF V.M)**
   Input impedance: 1MΩ or more, 2 pF or less
   Voltage range: Full scale = 10mV to 300V
   Measurable frequency range: up to 450MHz
3. **Frequency counter (f. counter)**
   Input sensitivity: About 50mV
   Measurable frequency: 450MHz or more
4. **DC power supply**
   Voltage: Variable in the range 10 to 17V
   Current: 13A or more
5. **Power meter**
   Measurement power: 60W, 30W, 10W
   Impedance: 50Ω
   Measurable frequency: 450MHz
6. **AF valve voltmeter (AF V.M)**
   Input impedance: 1MΩ or more
   Voltage range: Full scale = 1mV to 30 V
   Measurable frequency range: 50Hz to 10kHz
7. **AF generator (AG)**
   Output frequency: 100Hz to 10kHz
   Output voltage: 0.5mV to 1V
8. **Line detector**
   Measurable frequency: 450MHz
9. **Spectrum analyzer**
   Measurable frequency: 450MHz
10. **Directional coupler**
11. **Oscilloscope**
    High sensitivity with horizontal input terminal
12. **Standard signal generator (SSG)**
    The standard signal generator must be able to generate the 1GHz band frequencies and vary the amplitude and frequency.
    Output: -133dBm to greater than -13dBm
13. **Dummy load (for AF)**
    8Ω, about 5W
14. **Noise generator**
    The noise generator must be able to generate noise similar to ignition noise containing high-frequency components of 450MHz or more.
15. **Sweep generator**
    The sweep generator must be able to sweep the 144 and 430MHz bands.
16. **Tracking generator**
17. **Adjustment jig**

Preparation

- Set the controls and switches to the positions listed below unless otherwise specified.

VOL control	Fully counterclockwise
SQL control	Fully counterclockwise
POWER switch	OFF
(For fixed stations) DC power supply POWER switch	OFF

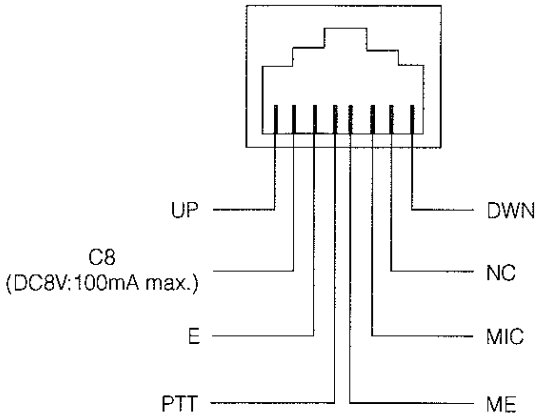

Microphone socket
(as viewed from the front of the set)

- Use an insulated rod, such as a plastic rod, for adjustment (especially for trimmers, coils, etc.).
- To protect the signal generator, never connect the microphone to the microphone socket when the receiver section is adjusted.
- Before the power cord is connected, make sure the power switch is off.
- Without specification of SSG, standard modulation is applied (MOD : 1kHz, DEV : ±3kHz, AF output : 0.63V / 8Ω)
- See the instruction manual for transmit and receive operations.

ADJUSTMENT

Internal clock resetting

If the following operations are performed, the clock (TNC unit IC1) in the transceiver must be reset. Reset the clock as follows. (If it is not reset, the clock does not count correctly.)

1. Replace the lithium battery (BA600: W09-0570-05) installed in the TX-RX unit (X57-586X-XX).
2. Disconnect the flat cable (E37-0840-05) between the TX-RX unit (X57-586X-XX) and TNC unit (X52-3310-00).

Procedure for resetting the internal clock

1. Hold down the [F3] and [F4] keys and turn [PWR] ON.
2. The frequency display screen appears. (The screen is the same as the one that is displayed when the power is normally turned on, but the internal clock is reset to "January 1, 2000, 00:00:00".)

Checking the time and date after resetting

1. Time
   (1) Press the [MNU] key to enter menu mode.
   (2) Select menu number 1 (RADIO) on the left side with the encoder and press [OK].
   (3) Select menu number 6 (TNC) at the center with the encoder and press [OK].
   (4) When menu number 3 (TIME) on the right side is selected with the encoder and [OK] is pressed, the time setting mode is entered and a check can be made to see whether the time is "00:00". (See the figure below.)

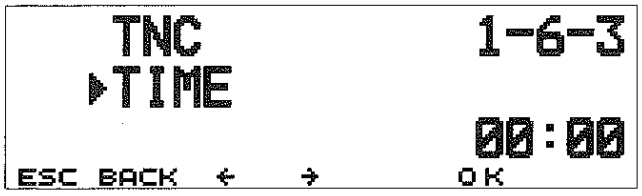

2. Data
   (1) Press the [MNU] key to enter menu mode.
   (2) Select menu number 1 (RADIO) on the left side with the encoder and press [OK].
   (3) Select menu number 6 (TNC) at the center with the encoder and press [OK].
   (4) When menu number 4 (DATE) on the right side is selected with the encoder and [OK] is pressed, the date setting mode is entered and a check can be made to see whether the date is set to "00-01-01" (January 1, 2000). (See the figure below.)

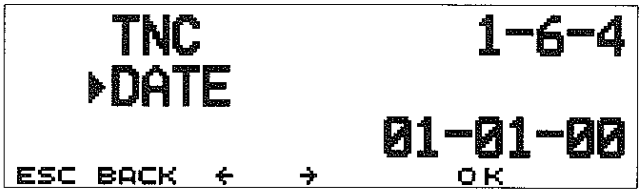

Note: The order of year, month, and day in the date format is different according to destinations.

K destination : Month–day–year
M4, E destination : Day–Month–year

ADJUSTMENT

Adjustment Service Jig

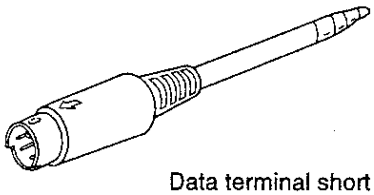

Data terminal short plug (W05-0611-00)

●Service jigs usage

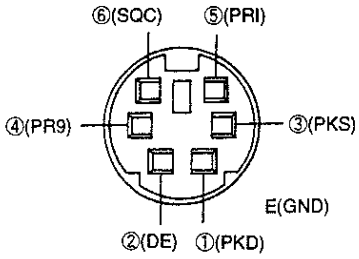

Pin assignment seen from direction B

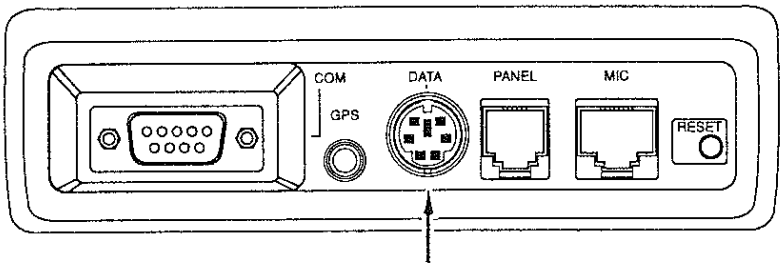

Short plug
Terminals ③ and ⑥ are short circuited.

[Reference] ③ PKS (SEND switch for DATA terminal)
Connect PTT output. If PKS is set to "L",
data are sent and the microphone will be mute.
⑥ SQC (Squelch control output)
This outputs squelch control output.

●Service jigs specification

Plug cable with 6P mini-DIN : Model PG-5A (cable parts No. : E30-3202-05) processed like under fig.

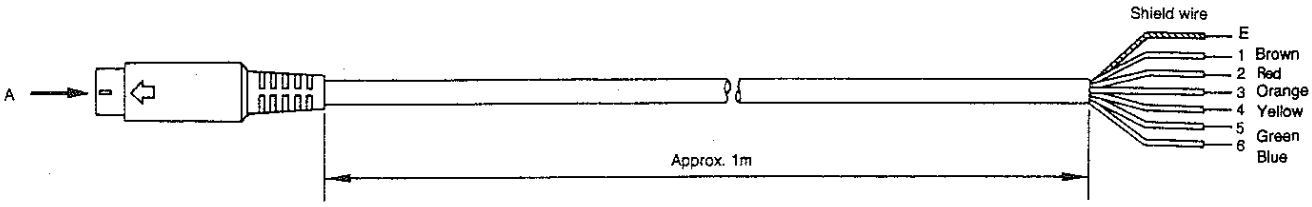

(Cut the cable at suitable length.)

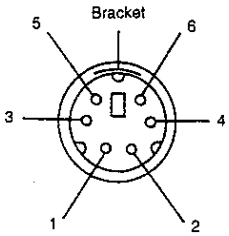

Pin assignment seen from direction A

DIN pin No.	Color
1	Brown
2	Red
(3)	Orange
4	Yellow
5	Green
(6)	Blue
Bracket	Shield

Join these DIN pins.

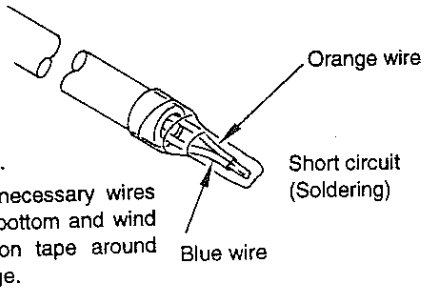

Cut unnecessary wires at the bottom and wind insulation tape around top edge.

TM-D700A/E

ADJUSTMENT

Parts layout

Front panel

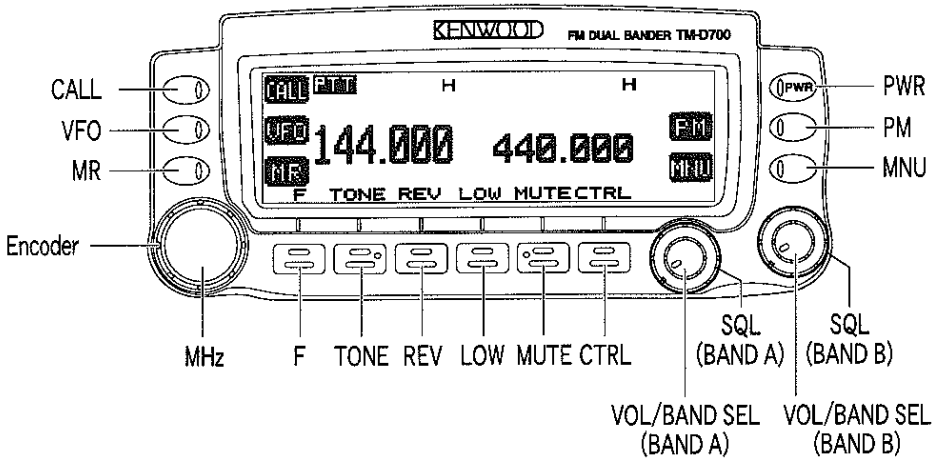

Rear panel

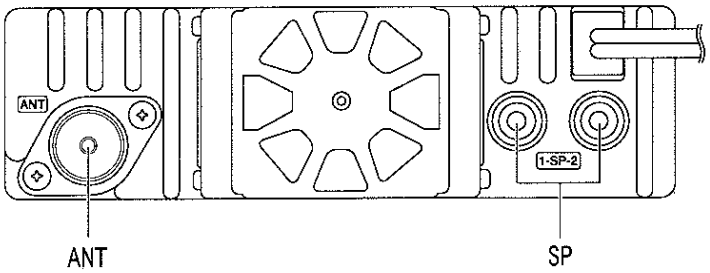

Adjustment parts layout

- TX-RX UNIT
  (Unit under)

- Adjustment parts No.
  TC1 : Transmission frequency (VHF)
  TC300 : Transmission frequency (UHF)
  L204 : BPF (VHF)
  L207 : BPF (VHF)
  L209 : BPF (VHF)
  L102 : AF distortion (VHF)
  L200 : AF distortion (VHF)
  L401 : AF distortion (UHF)
  L500 : AF distortion (UHF)

- Test point
  SMV : BPF

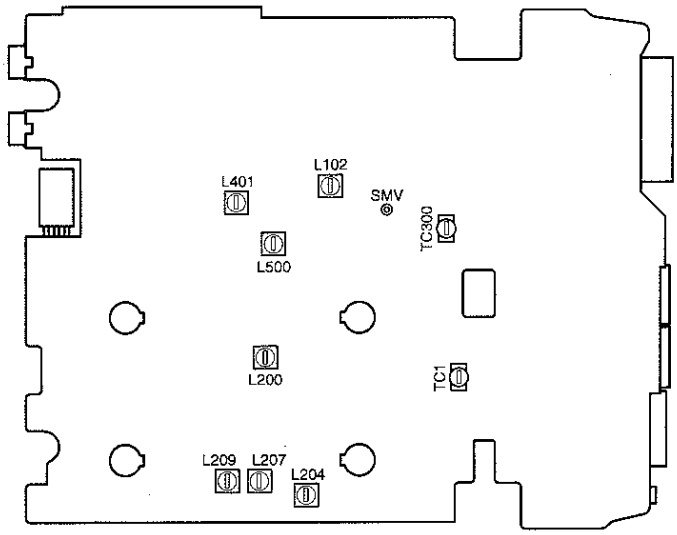

ADJUSTMENT

Adjustment mode

- This is the adjustment mode for making adjustments or setting levels.
- The following items can be adjusted or set.
  A. Squelch open sensitivity
  B. S meter (the first segment ON, all segments ON)
  C. Transmission output power (lower limit frequency, center frequency, and upper limit frequency of the band)
  D. Transmission deviation
  E. DCS modulation balance
  F. Tone deviation
  G. DCS deviation

Adjustment mode startup method

1. Turn **[PWR]** OFF and insert the adjustment plug into the data terminal of the transceiver.
2. Hold down the **[F]** and **[TONE]** keys, and turn **[PWR]** ON.
3. The transceiver will enter the adjustment mode and display the following:

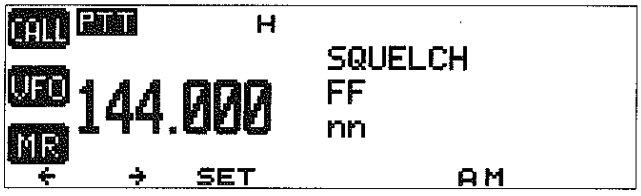

4. In adjustment mode, the desired band and frequency can be selected with **[VFO]**, **[MR]**, **[ENCODER]**, **[MHZ]**, and **[BAND SEL]**.
5. Pressing the [←] or [→] key switches the adjustment item to the previous item or the next item among the seven adjustment items A-G.

A. Squelch open sensitivity (value set for each band)

1. Press the [←] and [→] keys to display "SQUELCH". The current squelch level input value is displayed on the screen and adjustment can be performed. (See the figure below.)

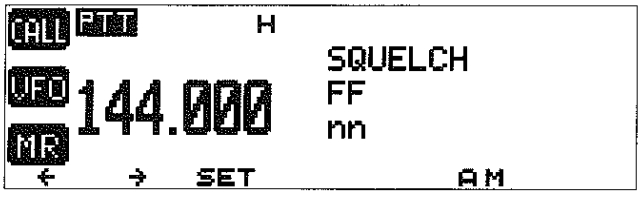

2. When specified SSG input is applied to the antenna connector and the **[SET]** key is pressed, an adjustment value is set.

B. S meter (value set for each band)

1. Press the [←] and [→] keys to display "S METER". The current S meter input value is displayed on the screen and adjustment can be performed. (See the figure below.)

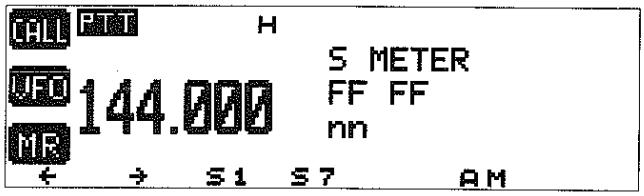

2. S meter (the first segment ON)
   When specified SSG input applied to the antenna connector and the **[S1]** key is pressed, a value is set so that the first segment of the S meter turns on.
3. S meter (all segments ON)
   When specified SSG input applied to the antenna connector and the **[S7]** key is pressed, a value is set so that the all segment of the S meter turns on.

C. Transmission output power (values set independently for 144MHz and 430MHz)

1. Press the [←] and [→] keys to display "APC". The current transmission output power setting is displayed on the screen. (See the figure below.)

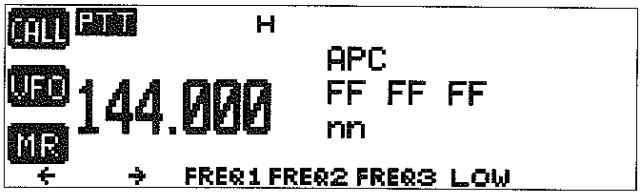

2. Select a desired transmission output range (HI, MID, or LOW) with the **[LOW]** key.
3. Connect the power meter to the antenna connector. Connect a microphone to the microphone connector.
4. Lower limit frequency transmission output setting.
   (1)Set the lower limit frequency and press the microphone PTT button to enter transmit mode.
   (2)Adjust the power meter to the prescribed transmission power by turning the encoder.
   (3)When the specified transmission power value is reached, release the microphone PTT button and press the **[FREQ1]** key to set the adjustment value.
5. Center frequency transmission output setting.
   (1)Set the center limit frequency and press the microphone PTT button to enter transmit mode.
   (2)Adjustment the power meter to the prescribed transmission power by turning the encoder.
   (3)When the specified transmission power value is reached, release the microphone PTT button and press the **[FREQ2]** key to set the adjsutment value.

ADJUSTMENT

6. Upper limit frequency transmission output setting.
   (1)Set the upper limit frequency and press the microphone PTT button to enter transmit mode.
   (2)Adjustment the power meter to the prescribed transmission power by turning the encoder.
   (3)When the specified transmission power value is reached, release the microphone PTT button and press the **[FREQ3]** key to set the adjsutment value.

D. Transmission deviation (values set independently for 144MHz and 430MHz)

1. Press the [←] and [→] keys to display "MAX DEV". The current transmission deviation setting is display on the screen. (See the figure below.)

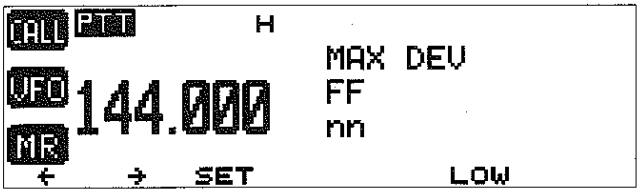

2. Connect the direct wave detector and power meter to the ANT terminal, apply the prescribed A.G. input from the MIC input terminal, and transmit.
   Turn the **[ENCODER]** knob to adjust the direct wave detector reading to the prescribed value.
3. When the prescribed value is reached, stop transmission and press the **[SET]** key to set the adjustment value.

E. DCS modulation balance (values set independently for 144MHz and 430MHz)

1. Press the [←] and [→] keys to display "DCS BALANCE".
   The current DCS modulation balance setting is display on the screen. (See the figure below.)

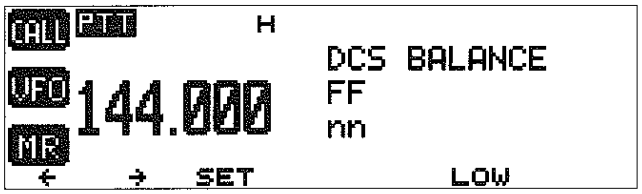

2. Connect the linear detector and oscilloscope to the antenna connector. Connect a microphone to the microphone connector.
3. When the microphone PTT button is pressed to enter transmit mode, 50Hz square waves are internally generated and modulated.
4. While observing the oscilloscope, turn the encoder to adjust the DCS modulation waveform to square waveform.
5. When the DCS modulation waveform becomes square waveform, release the microphone PTT button and press the **[SET]** key to set the adjustment value.

F. Tone deviation (values set independently for 144MHz and 430MHz)

1. Press the [←] and [→] keys to display "TONE DEV". The current Tone deviation setting is display on the screen. (See the figure below.)

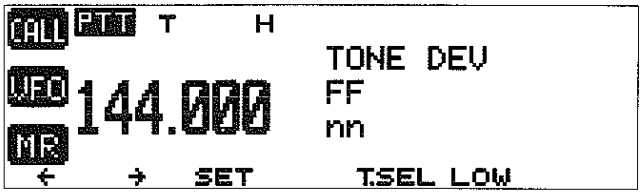

2. Connect the linear detector and oscilloscope to the antenna connector. Connect a microphone to the microphone connector.
3. When the **[T.SEL]** key is pressed, the tone frequency setting mode is entered, so set a tone frequency to be adjusted by turning the encoder.
4. The microphone PTT button is pressed to enter transmit mode.
5. Connect the direct wave detector and power meter to the ANT terminal, apply the prescribed A.G. input from the MIC input terminal, and transmit.
   Turn the **[ENCODER]** knob to adjust the direct wave detector reading to the prescribed value.
6. When the prescried value is reached, stop transmission and press the **[SET]** key to set the adjustment value.

G. DCS deviation (values set independently for 144MHz and 430MHz)

1. Press the [←] and [→] keys to display "DCS DEV". The current DCS deviation setting is display on the screen. (See the figure below.)

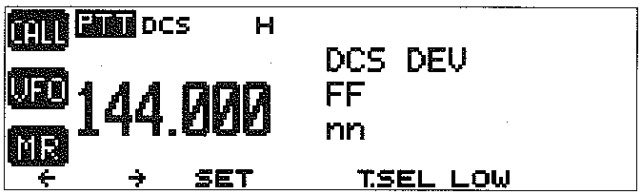

2. Connect the linear detector and oscilloscope to the antenna connector. Connect a microphone to the microphone connector.
3. When the **[T.SEL]** key is pressed, the tone frequency setting mode is entered, so set a tone frequency to be adjusted by turning the encoder.
4. The microphone PTT button is pressed to enter transmit mode.
5. Connect the direct wave detector and power meter to the ANT terminal, apply the prescribed A.G. input from the MIC input terminal, and transmit.
   Turn the **[ENCODER]** knob to adjust the direct wave detector reading to the prescribed value.
6. When the prescried value is reached, stop transmission and press the **[SET]** key to set the adjustment value.

Note: To end adjustment mode, switch off the power.

ADJUSTMENT

Common section

Item	Condition	Measurement			Adjustment			Specifications/ Remarks
		Test-equipment	Unit	Terminal	Unit	Parts	Method	
1.Setting	1) Power voltage:13.8V 2) Band A, Band B VOL, SQL knob:MIN							

2.Reset

PARTIAL OR FULL RESET?

If your transceiver seems to be malfunctioning, initializing the transceiver may resolve the problem. Use Full Reset to initialize all settings that you have customized. Partial (VFO) Reset does not initialize the following settings:

Memory channels	Memory channels names
Memory channel lockout	Call channels
Program scan channels	PM channels
DTMF memory channels	DTMF memory channel names

Some of the VFO factory defaults are listed below:

Parameter	Band A	Band B
VFO freq.	144.000MHz	440.000MHz (U.S.A./Canada) or430.000MHz
Freq. step	5kHz (U.S.A./ Canada) or 12.5kHz	25kHz
Tone freq.	88.5Hz	88.5Hz

1. Press **[MNU]** to enter Menu mode.
2. Press **[▲]/[▼]** to select "RADIO (1–)", then press **[OK]**.
3. Press **[▲]/[▼]** to select "AUX (1–9–)", then press **[OK]**.
4. Press **[▲]/[▼]** to select "RESET (1–9–7)", then press **[OK]**.

5. Press **[▲]/[▼]** to select Partial (VFO) Reset, PM Reset, or Full Reset, then press **[OK]**.
   - A confirmation message appears.
   - Press **[ESC]** to quit resetting.
6. Press **[OK]**.

After switching the power OFF, you may press **[VFO]** + **POWER ON** for Partial Reset, or **[MR]** + **POWER ON** for Full Reset. This allows you to skip steps 1 to 5.

You can also use the RESET button to perform Partial or Full Reset.

Note : When in All-control Lock or Channel Display mode, you cannot perform Partial Reset nor Full Reset.

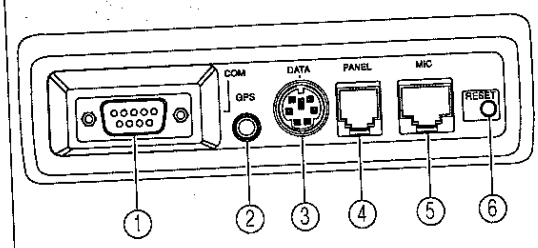

① COM connector

② GPS jack

③ DATA connector

④ PANEL connector

⑤ MIC connector

⑥ RESET button
Press momentarily to perform Partial Reset, or press for 1 second or longer to perform Full Reset. No confirmation message appears. Use this switch when the microcomputer and/or the memory chip malfunction because of ambient factors.

3.BPF Adjust	1) Band A FREQ.:146.050MHz:**K** FREQ.:145.050MHz: **M4, E** SSG:5.01μV (-93dBm)	SSG D.V.M	Rear panel TX-RX	ANT SMV	TX-RX	L204 L207 L209	To maximize voltage	1.8V or higher

ADJUSTMENT

Receiver section

Item	Condition	Measurement			Adjustment			Specifications/ remarks
		Test-equipment	Unit	Terminal	Unit	Parts	Method	
1. High level input S/N and distortion check [Wide]	1) Band A FREQ.:146.050MHz:**K** FREQ.:145.050MHz: **M4,E** SSG:501μV (-53dBm) AF output:2.83V/8Ω	SSG Oscilloscope AF V.M Distortion meter	Rear panel	ANT EXT.SP			Check	S/N 42dB or more Distortion rate:4% or less
	2) Band B FREQ.:444.150MHz:**K** FREQ.:435.150MHz: **M4,E** SSG:501μV (-53dBm) AF output:2.83V/8Ω							
[Narrow] (E type only)	1) Band A FREQ.:145.050MHz:**E** SSG:501μV (-53dBm) AF output:2.83V/8Ω						Check	S/N 37dB or more Distortion rate:4% or less
	2) Band B FREQ.:435.150MHz:**E** SSG:501μV (-53dBm) AF output:2.83V/8Ω							
2. Sensitivity check [Wide]	1) Band A FREQ.:146.050MHz:**K** FREQ.:145.050MHz: **M4,E** FREQ.:144.050MHz FREQ.:147.925MHz:**K** FREQ.:145.925MHz:**M4,E** SSG:0.25μV (-119dBm):**K** SSG:0.178μV(-122dBm):**M4,E** AF output:0.63V/8Ω	SSG Distortion meter Oscilloscope AF V.M	Rear panel	ANT EXT.SP			Check	SINAD 12dB or more
	2) Band B FREQ.:444.150MHz:**K** FREQ.:435.150MHz: **M4,E** FREQ.:438.100MHz:**K** FREQ.:430.100MHz: **M4,E** FREQ.:449.875MHz:**K** FREQ.:439.875MHz: **M4,E** SSG:0.178μV (-122dBm) AF output:0.63V/8Ω							
	3) Band A (Sub band) FREQ.:441.150MHz:**K** FREQ.:435.150MHz: **M4,E** SSG:0.28μV (-118dBm) AF output:0.63V/8Ω							

ADJUSTMENT

Receiver section

Item	Condition	Measurement			Adjustment			Specifications/ remarks
		Test-equipment	Unit	Terminal	Unit	Parts	Method	
2. Sensitivity check [Wide]	4) Band B (Sub band) FREQ.:146.050MHz:**K** FREQ.:145.050MHz: **M4,E** SSG:0.398μV (-115dBm):**K** SSG:0.28μV (-118dBm): **M4,E** AF output:0.63V/8Ω	SSG Distortion meter Oscilloscope AF V.M	Rear panel	ANT EXT.SP			Check	SINAD 12dB or more
[Narrow] (E type only)	5) Band A FREQ.:145.050MHz:**E** SSG:0.22μV (-120dBm) AF output:0.63V/8Ω							
	6) Band B FREQ.:435.150MHz:**E** SSG:0.22μV (-120dBm) AF output:0.63V/8Ω							
	7) Band A (Sub band) FREQ.:435.150MHz:**E** SSG:0.35μV (-116dBm) AF output:0.63V/8Ω							
	8) Band B (Sub band) FREQ.:145.050MHz:**E** SSG:0.35μV (-116dBm) AF output:0.63V/8Ω							
3. Squelch write	Switch to adjustment mode and carry out the operations for Item A. 1) Band A FREQ.:146.050MHz:**K** FREQ.:145.050MHz: **M4,E** SSG:0.126μV (-125dBm):**K** SSG:0.112μV (-126dBm):**M4,E**	SSG	Rear panel	ANT EXT.SP	Display	[SET] key	Write	
	2) Band B FREQ.:444.150MHz:**K** FREQ.:435.150MHz: **M4,E** SSG:0.112μV (-126dBm)							
4. Squelch check	1) Band A FREQ.:146.050MHz:**K** FREQ.:145.050MHz: **M4,E** SSG:OFF Set to the point where noise will be erased by turning the squelch knob.	SSG Oscilloscope	Rear panel	ANT EXT.SP	Display		Check	Knob position: 8:00 ~ 11:00 Busy lights off.

ADJUSTMENT

Receiver section

Item	Condition	Measurement			Adjustment			Specifications/ remarks
		Test-equipment	Unit	Terminal	Unit	Parts	Method	
4. Squelch check	2) SSG:0.126μV (-125dBm):**K** SSG:0.112μV (-126dBm):**M4,E**	SSG Oscilloscope	Rear panel	ANT EXT.SP	Display		Check	Squelch open. BUSY lights on.
	3) Squelch knob: clockwise MAX							AF output disappear. BUSY lights off.
	4) Band B FREQ.:444.150MHz:**K** FREQ.:435.150MHz: **M4,E** Set to the point where noise will be erased by turning the squelch knob.						Check	Knob position: 8:00 ~ 11:00 Busy lights off.
	5) SSG:0.112μV (-126dBm)							Squelch open. BUSY lights on.
	6) Squelch knob: clockwise MAX							AF output disappear. BUSY lights off.
	7) Band B (Sub band) FREQ.:146.050MHz:**K** FREQ.:145.050MHz: **M4,E** SSG:OFF Set to the point where noise will be erased by turning the squelch knob.						Check	Knob position: 8:00 ~ 11:00 Busy lights off.
	8) SSG:0.178μV (-122dBm):**K** SSG:0.158μV (-123dBm):**M4,E**							Squelch open. BUSY lights on.
	9) Squelch knob: clockwise MAX							AF output disappear. BUSY lights off.
	10)Band A (Sub band) FREQ.:444.150MHz:**K** FREQ.:435.150MHz: **M4,E** Set to the point where noise will be erased by turning the squelch knob.						Check	Knob position: 8:00 ~ 11:00 Busy lights off.
	11)SSG:0.199μV (-121dBm)							Squelch open. BUSY light on.
	12)Squelch knob: clockwise MAX							AF output disappear. BUSY lights off.

ADJUSTMENT

Receiver section

Item	Condition	Measurement			Adjustment			Specifications/ remarks
		Test-equipment	Unit	Terminal	Unit	Parts	Method	
5. S-meter write	Switch to adjustment mode and carry out the operations for Item B. 1) Band A (S1) FREQ.:146.050MHz:**K** FREQ.:145.050MHz: **M4,E** SSG:0.28μV (-118dBm)	SSG	Rear panel	ANT	Display	[S1] key	Write	One Segment in S-meter lights.
	2) Band A (S7) SSG:3.54μV (-96dBm)					[S7] key		All segments in S-meter light.
	3) Band B (S1) FREQ.:444.150MHz:**K** FREQ.:435.150MHz: **M4,E** SSG:0.28μV (-118dBm)					[S1] key		One Segment in S-meter lights.
	4) Band B (S7) SSG:3.54μV (-96dBm)					[S7] key		All segments in S-meter light.
	5) Band B (Sub band) (S1) FREQ.:146.050MHz:**K** FREQ.:145.050MHz: **M4,E** SSG:0.28μV (-118dBm)					[S1] key		One Segment in S-meter lights.
	6) Band B (Sub band) (S7) SSG:3.54μV (-96dBm)					[S7] key		All segments in S-meter light.
	7) Band A (Sub band) (S1) FREQ.:444.150MHz:**K** FREQ.:435.150MHz: **M4,E** SSG:0.28μV (-118dBm)					[S1] key		One Segment in S-meter lights.
	8) Band A (Sub band) (S7) SSG:3.54μV (-96dBm)					[S7] key		All segments in S-meter light.
6. S-meter check	1) Band A FREQ.:146.050MHz:**K** FREQ.:145.050MHz: **M4,K** 2) Band A (Sub band) FREQ.:444.150MHz:**K** FREQ.:435.150MHz: **M4,E** SSG:0.501μV (-113dBm)	SSG	Rear panel	ANT	Display	S-meter	Check	More than one segment in S-meter lights.

ADJUSTMENT

Receiver section

Item	Condition	Measurement			Adjustment			Specifications/ remarks
		Test-equipment	Unit	Terminal	Unit	Parts	Method	
6. S-meter check	3) Band B FREQ.:444.150MHz:**K** FREQ.:435.150MHz: **M4,K** 4) Band B (Sub band) FREQ.:146.050MHz:**K** FREQ.:145.050MHz: **M4,E** SSG:0.501μV (-113dBm)	SSG	Rear panel	ANT	Display	S-meter	Check	More than one segment in S-meter lights.
	5) SSG:1.99μV (-101dBm)							Six or smaller segments in S-meter light.
	6) SSG:6.3μV (-91dBm)							All segments in S-meter light.

ADJUSTMENT

Transmission section

Item	Condition	Measurement			Adjustment			Specifications/ remarks
		Test-equipment	Unit	Terminal	Unit	Parts	Method	
1. Transmission frequency Adjust	1) Band A FREQ.:146.000MHz:**K** FREQ.:144.975MHz: **M4,E** Transmission	f. counter Power meter	Rear panel	ANT	TX-RX	TC1	146.000 MHz:**K** 144.975 MHz:**M4,E**	Not Warm up the set. ±100Hz
	2) Band B FREQ.:444.000MHz:**K** FREQ.:435.000MHz: **M4,E** Transmission					TC300	444.000 MHz:**K** 435.000 MHz:**M4,E**	
2-1. Power write or check Band A	For 1), 2) and 4), switch to adjustment mode and carry out the operations for Item C. 1) POWER:LOW FREQ.:146.000MHz:**K** FREQ.:144.975MHz: **M4,E** Transmission	Power meter Ammeter	Rear panel	ANT	Display	Encoder [FREQ2] key	Write	5.0W±0.5W
	2) POWER:MID Transmission							12W±1W
	3) POWER:MAX Transmission						Check	48W or more
	4) POWER:HI Transmission				Display	Encoder [FREQ2] key	Write	**M4**:22.5W±1W **K,E**: 1) MAX Power 52W or more. 50W±1W 2) MAX Power 48 ~ 52W (MAX Power -2W) ±1W
	5) FREQ.:144.000MHz FREQ.:147.975MHz:**K** FREQ.:145.975MHz: **M4,E** POWER:HI Transmission						Check	**K,E**:44 ~ 60W **M4**:20 ~ 25W
	6) POWER:MID Transmission							10 ~ 14W
	7) POWER:LOW Transmission							3 ~ 10W
2-2. POWER write or check Band B	For 1), 2) and 4), switch to adjustment mode and carry out the operations for Item C. 1) POWER:LOW FREQ.:444.000MHz:**K** FREQ.:435.000MHz: **M4,E** Transmission	Power meter Ammeter	Rear panel	ANT	Display	Encoder [FREQ2] key		5.0W±0.5W

ADJUSTMENT

Transmission section

Item	Condition	Measurement			Adjustment			Specifications/ remarks
		Test-equipment	Unit	Terminal	Unit	Parts	Method	
2-2. POWER write or check Band B	2) POWER:MID Transmission	Power meter Ammeter	Rear panel	ANT	Display	Encoder [FREQ2] key	Write	12W±1W
	3) POWER:MAX Transmission						Check	33W or more
	4) POWER:HI Transmission				Display	Encode [FREQ2] key	Write	**M4**:22.5W±1W **K,E**: 1) MAX Power 37W or more. 35W±1W 2) MAX Power 33 ~ 37W (MAX Power -2W) ±1W
	5) FREQ.:438.000MHz:**K** FREQ.:430.000MHz: **M4,E** FREQ.:449.975MHz:**K** FREQ.:439.975MHz: **M4,E** POWER:HI Transmission						Check	**K,E**:28 ~ 42W **M4**:20 ~ 25W
	6) POWER:MID Transmission							10 ~ 14W
	7) POWER:LOW Transmission							3 ~ 10W
3. DEV write or check [Wide]	For 1) and 3), switch to adjustment mode and carry out the operations for Item D. 1) Band A FREQ.:146.000MHz:**K** FREQ.:144.975MHz: **M4,E** AG:1kHz/20mV:**E** AG:1kHz/50mV:**K,M4** Transmission	Power meter Linear detector Oscilloscope	Rear panel	ANT	Display	Encoder [SET] key	Write	±4.2kHz±0.15kHz
	2) Down AG output from the above state by 20dB (1kHz/2.0mV):**E** 20dB (1kHz/5.0mV): **K,M4** Transmission	AG AF V.M					Check	±2.34 ~ 4.17kHz:**E** ±2.38 ~ 4.05kHz: **K,M4**
	3) Band B FREQ.:444.000MHz:**K** FREQ.:435.000MHz: **M4,E** AG:1kHz/20mV:**E** AG:1kHz/50mV:**K,M4** Transmission				Display	Encoder [SET] key	Write	±4.2kHz±0.15kHz

ADJUSTMENT

Transmission section

Item	Condition	Measurement			Adjustment			Specifications/ remarks
		Test-equipment	Unit	Terminal	Unit	Parts	Method	
3. DEV write or check [Wide]	4) Down AG output from the above state by 20dB (1kHz/2.0mV):**E** 20dB (1kHz/5.0mV): **K,M4** Transmission	Power meter Linear detector Oscilloscope AG AF V.M	Rear panel	ANT			Check	±2.34 ~ 4.17kHz:**E** ±2.38 ~ 4.05kHz: **K,M4**
[Narrow] (E type only)	5) Band A FREQ.:144.975MHz:**E** AG:1kHz/20mV:**E** Transmission						Check	±1.8 ~2.4Hz
	6) Band B FREQ.:435.000MHz:**E** AG:1kHz/20mV:**E** Transmission						Check	±1.8 ~2.4Hz
4. DCS balance adjustment	Switch to adjustment mode and carry out the operations for Item E. 1) Band A FREQ.:146.000MHz:**K** FREQ.:144.975MHz: **M4,E** Transmission	Power meter Linear detector Oscilloscope	Rear panel	ANT		Encoder [SET] key	By turning an encoder, adjust the modulation wave until if becomes the square wave	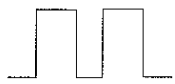
	2) Band B FREQ.:444.000MHz:**K** FREQ.:435.000MHz: **M4,E** Transmission							
5. TONE DEV write or check Band A [Wide]	For 1)and 4), Switch to adjustment mode and carry out the operations for Item F. 1) FREQ.:145.100MHz TONE:88.5Hz Transmission	Power meter Linear detector Oscilloscope	Rear panel	ANT		Encoder [SET] key	Write	±0.8±0.15kHz
	2) FREQ.:145.100MHz TONE:88.5Hz Transmission						Check	±0.5 ~ 1.3kHz
[Narrow] (E type only)	3) FREQ.:145.100Hz:**E** TONE:88.5Hz Transmission						Check	±0.2 ~ 0.7kHz
Band B [Wide]	4) FREQ.:445.100MHz:**K** FREQ.:435.100MHz: **M4,E** TONE:88.5Hz Transmission					Encoder [SET] key	Write	±0.8±0.15kHz
	5) FREQ.:445.100MHz:**K** FREQ.:435.100MHz: **M4,E** TONE:88.5Hz Transmission						Check	±0.5 ~ 1.3kHz

ADJUSTMENT

Transmission section

Item	Condition	Measurement			Adjustment			Specifications/ remarks
		Test-equipment	Unit	Terminal	Unit	Parts	Method	
5. TONE DEV write or check Band B [Narrow] (E type only)	6) FREQ.:435.100MHz:**E** TONE:88.5Hz Transmission	Power meter Linear detector Oscilloscope	Rear panel	ANT			Check	±0.2 ~ 0.7kHz
6. DCS DEV write or check Band A [Wide]	For 1) and 4), Switch to adjustment mode and carry out the operations for Item G. 1) FREQ.:145.200MHz Transmission	Power meter Linear detector Oscilloscope	Rear panel	ANT		Encoder [SET] key	Write	±0.8±0.15kHz
	2) FREQ.:145.200MHz Transmission						Check	±0.5 ~ 1.3kHz
[Narrow] (E type only)	3) FREQ.:145.200MHz:**E** Transmission						Check	±0.2 ~ 0.7kHz
Band B [Wide]	4) FREQ.:445.200MHz:**K** FREQ.:435.200MHz: **M4,E** Transmission					Encoder [SET] key	Write	±0.8±0.15kHz
	5) FREQ.:445.200MHz:**K** FREQ.:435.200MHz: **M4,E** Transmission						Check	±0.5 ~ 1.3kHz
[Narrow] (E type only)	6) FREQ.:435.200MHz:**E** Transmission						Check	±0.2 ~ 0.7kHz
7. Protection check	1) Band A FREQ.:146.000MHz:**K** FREQ.:144.975MHz: **M4,E** POWER:HI ANT:short circuit and open	Ammeter					Check	12.0A or less
	2) Band B FREQ.:444.000MHz:**K** FREQ.:435.000MHz: **M4,E** POWER:HI ANT:short circuit and open Transmission							12.0A or less

*** At the end of adjustments, reconfirm "3. DEV".**

OPTION

PG-4X (Extension cable kit)

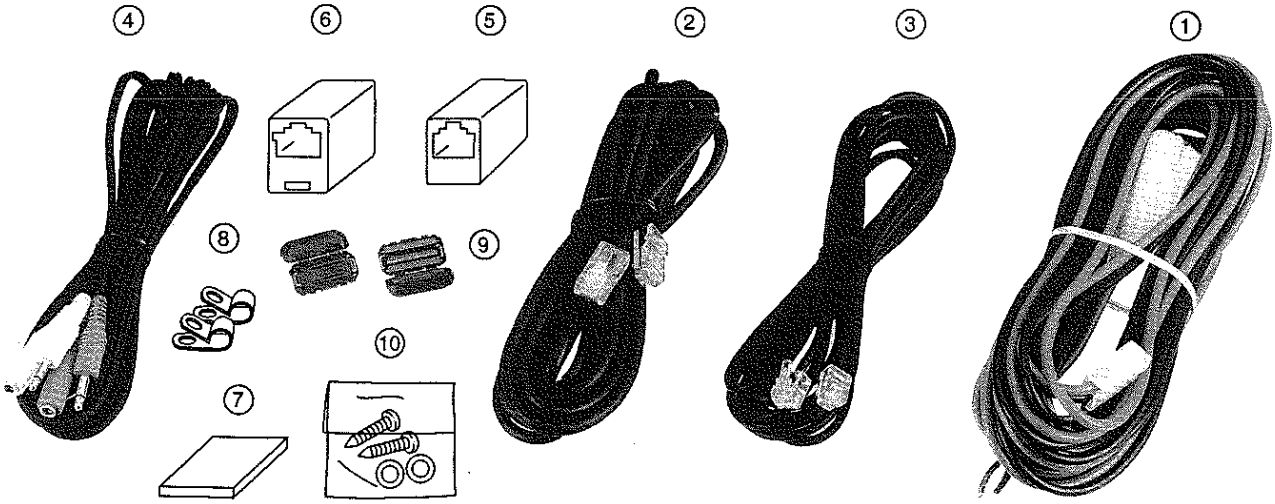

PG-4X MAIN PARTS LIST

Ref. No	New Parts	Parts No.	Q'ty	Parts Name
1		E30-3199-05	1	DC CORD (6m)
2	*	E30-3394-05	1	MODULAR CABLE (4m:MIC)
3	*	E30-3395-05	1	MODULAR CABLE (4m:PANEL)
4	*	E30-3399-05	1	TRUNK CABLE (4m:SP)
5	*	E58-0472-05	1	MODULAR JACK (6 PIN)
6	*	E58-0473-05	1	MODULAR JACK (8 PIN)
7		G13-0978-04	1	CUSHION
8		J19-1433-05	2	HOLDER
9		L79-1417-05	2	LINE FILTER
10	*	N99-2016-05	1	SCREW SET

TM-D700A/E SPECIFICATIONS

Specifications are subject to change without notice due to advancements in technology.

General			VHF Band	UHF Band
Frequency range		U.S.A/Canada	144~148MHz	438~450MHz
		Taiwan	144~146MHz	430~440MHz
		Europe	144~146MHz	430~440MHz
Mode			F3E (FM), F2D (FSK), F1D (GMSK)	
Antenna impedance			50Ω	
Usable temperature range			-20°C ~ +60°C (-4°F~ +140°F)	
Power supply			13.8V DC ±15%(11.7~15.8V)	
Grounding method			Negative ground	
Current	U.S.A/Canada	Transmit (max.)	11.5A or less	10.0A or less
	Europe	Receive (at 2W output)	1.0A or less	
	Taiwan	Transmit (max.)	8.5A or less	9.0A or less
		Receive (at 2W output)	1.0A or less	
Frequency stability(-10°C ~ +50°C)			Within ± 3ppm	
Dimensions (W × H × D projections included)		Main Body	140 × 41 × 195mm / 5.51" × 1.61" × 7.68"	
		Panel	140 × 60 × 49.3mm / 5.51" × 2.36" × 1.94"	
Weight		Main Body	Approx.1.2kg/2.61b	
		Panel	Approx.180g/0.391b	

Transmitter				
Power output	Hight	U.S.A/Canada	50W	35W
		Europe		
		Taiwan	25W	25W
	Mid		Approx.10W	
	Low		Approx.5W	
Modulation			Reactance	
Spurious emissions			-60dB or less	
Maximum frequency deviation	U.S.A/Canada		± 5kHz	
	Taiwan			
	Europe		± 5kHz (Wide), ± 2.5kHz (Narrow)	
Audio distortion (at 60% modulation)			3% or less	
Microphone impedance			600Ω	

Receiver			
Circuitry		Double conversion	
Intermediate frequency (1st/2nd)		38.85MHz/450kHz	45.05MHz/455kHz
Sensitivity (12dB SINAD)	VHF or UHF band	0.16μV or less	
	Sub VHF or UHF band (in VHF/VHF or UHF/UHF mode)	0.25μV or less	
Selectivity (-6dB)	U.S.A/Canada	12kHz or more	
	Taiwan		
	Europe	12kHz or more (Wide), 6kHz or more (Narrow)	
Selectivity (-40dB)	U.S.A/Canada	28kHz or less	
	Taiwan		
	Europe	28kHz or less (Wide), 15kHz or less (Narrow)	
Squelch sensitivity		0.1μV or less	
Audio output (8 ohms, 5%distortion)		2W or higher	
Audio output impedance		8Ω	

Note: Receiver specifications apply only when using the main VHF or UHF band. They do not apply to the sub VHF or UHF band in VHF/VHF or UHF/UHF mode.

KENWOOD CORPORATION

14-6, Dogenzaka 1-chome, Shibuya-ku, Tokyo 150-8501, Japan

KENWOOD SERVICE CORPORATION
P.O. BOX 22745, 2201 East Dominguez Street, Long Beach, CA 90801-5745, U.S.A.

KENWOOD ELECTRONICS LATIN AMERICA S.A.
P.O. BOX 55-2791 Piso 6 Plaza Chase Cl. 47 y Aquilino de la Guardio Panama, Republic of Panama

KENWOOD ELECTRONICS CANADA INC.
6070 Kestrel Road, Mississauga, Ontario, Canada L5T 1S8

KENWOOD ELECTRONICS DEUTSCHLAND GMBH
Rembrücker Str. 15, 63150 Heusenstamm, Germany

KENWOOD ELECTRONICS BELGIUM N.V.
Mechelsesteenweg 418 B-1930 Zaventem, Belgium

KENWOOD ELECTRONICS FRANCE S.A.
13, Boulevard Ney, 75018 Paris, France

KENWOOD ELECTRONICS U.K. LIMITED
KENWOOD House, Dwight Road, Watford, Herts., WD1 8EB United Kingdom

KENWOOD ELECTRONICS EUROPE B.V.
Amsterdamseweg 37, 1422 AC Uithoorn, The Netherlands

KENWOOD ELECTRONICS ITALIA S.p.A.
Via G. Sirtori, 7/9 20129 Milano, Italy

KENWOOD IBERICA S.A.
Bolivia, 239-08020 Barcelona, Spain

KENWOOD ELECTRONICS AUSTRALIA PTY. LTD.
(A.C.N. 001 499 074)
16 Giffnock Avenue, North Ryde, N.S.W. 2113 Australia

KENWOOD ELECTRONICS(HONG KONG)LTD.
Unit 3712-3724, Level 37, Tower one Metroplaza, 223 Hing Fong Road, Kwai Fong, N.T., Hong Kong

KENWOOD ELECTRONICS TECHNOLOGIES(S) PTE LTD.
Sales Marketing Division
1 Ang Mo Kio Street 63, Singapore 569110

KENWOOD

ASI-0043

SUPPLEMENTARY INFO. •Amateur Radio Division

SUBJECT: TM-D700A BEYOND MARS MODIFICATION DATE: 12/29/99

This modification is provided "as is", and is subject to change without notice. Kenwood Service Corporation makes no warranty of any kind with regard to this modification procedure, including, but not limited to, the implied warranties of merchantability and fitness for a particular purpose. Kenwood Service Corporation shall not be liable for any error or for incidental or consequential damage in conjunction with the furnishing, performance, or use of this modification procedure.

It is illegal to operate outside the limits of your class license or permits.

1. Disconnect the power cord and antenna from the transceiver.
2. Remove the bottom cover (6 screws) from the transceiver.
3. Locate the green jumper wire and R659 towards the front right side of the PCB.
4. Carefully cut the wire. If required, insulate the ends of the wire so that they do not make contact with the PCB. Do not pull on the ends of the wire as this may lift foil patterns.
5. Desolder and remove R659. Do not pry up on the component as this may lift foil patterns.
6. Assemble the transceiver. The transceiver will automatically reset when turned on.

Transmit Operating Range: 136.000MHz - 173.995MHz, 400.000MHz - 469.995MHz

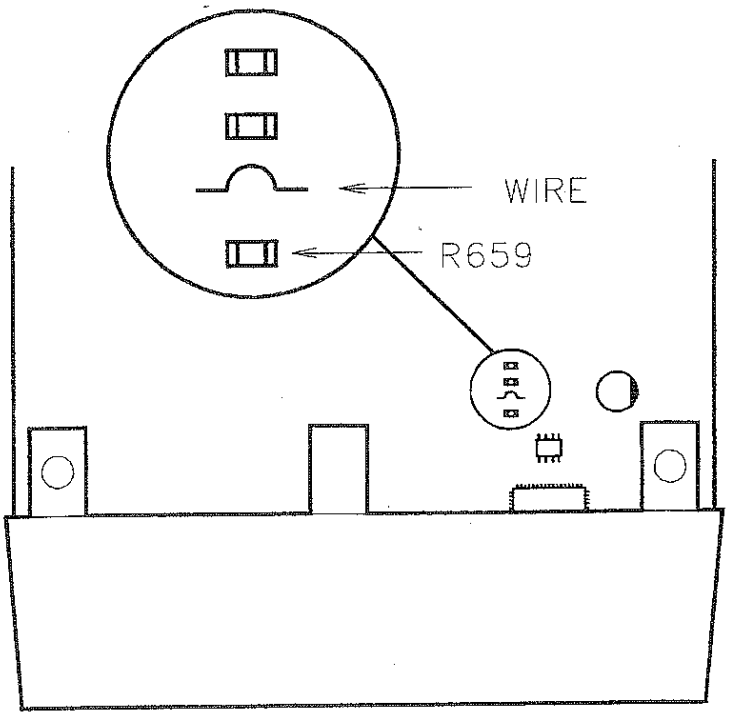

Copyright (C) 122999 by EWP for Kenwood Service Corporation Printed in U.S.A.

Kenwood Service Corporation 2201 E. Dominguez St. Long Beach, Ca. 90810

KENWOOD

ASI-0042

SUPPLEMENTARY INFO.•Amateur Radio Division

SUBJECT: TM-D700A MARS/CAP MODIFICATION INFORMATION DATE: 12/29/99

This modification is provided "as is", and is subject to change without notice. Kenwood Service Corporation makes no warranty of any kind with regard to this modification procedure, including, but not limited to, the implied warranties of merchantability and fitness for a particular purpose. Kenwood Service Corporation shall not be liable for any error or for incidental or consequential damage in conjunction with the furnishing, performance, or use of this modification procedure.

It is illegal to operate outside the limits of your class license or permits.

1. Disconnect the power cord and antenna from the transceiver.
2. Remove the bottom cover (6 screws) from the transceiver.
3. Locate the green jumper wire towards the front right side of the PCB.
4. Carefully cut the wire. If required, insulate the ends of the wire so that they do not make contact with the PCB. Do not pull on the ends of the wire as this may lift foil patterns.
5. Assemble the transceiver. The transceiver will automatically reset when turned on.

Transmit Operating Range: 142.000MHz - 151.995MHz, 420.000MHz - 449.995MHz

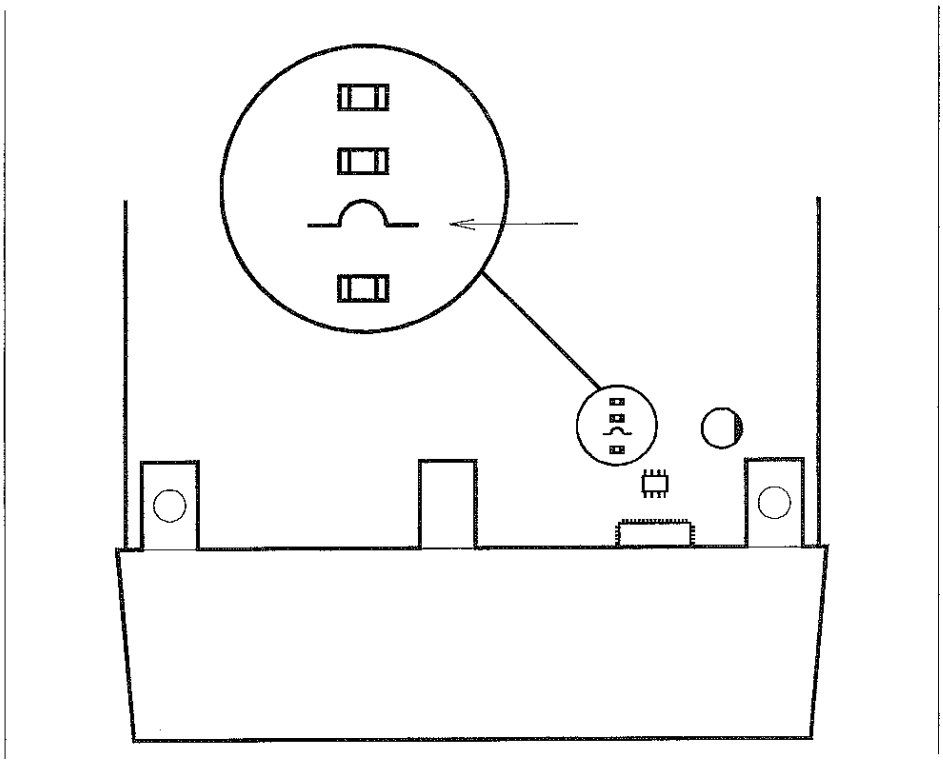

Copyright (C) 122999 by EWP for Kenwood Service Corporation

Printed in U.S.A.

Kenwood Service Corporation 2201 E. Dominguez St. Long Beach, Ca. 90810

PC BOARD VIEWS TM-D700A/E

TX-RX UNIT
(Component side)

Ref.NO.	Address
IC1	H11
IC2	H11
IC3	L11
IC4	L9
IC101	I6
IC301	H8
IC302	H8
IC701	L7
IC703	F5
IC802	F10
IC803	F10
IC804	F9
IC805	H6
IC806	2N
IC900	H4
IC901	J3
IC903	L2
IC904	K3
Q4	H10
Q10	K10
Q11	K9
Q103	J5
Q104	H5
Q105	I6
Q106	I6
Q107	I6
Q108	I5
Q110	I5
Q111	H6
Q112	J6
Q208	O6
Q402	K6
Q404	L5
Q405	K7
Q406	L6
Q700	L7
Q701	F8
Q801	F11
Q802	F11
Q803	F11
Q807	E5
Q900	O7
Q910	I3
Q911	I3
Q912	L3
Q913	I3
Q914	L3
D3	H10
D4	H11
D5	H11
D102	I6
D302	H8
D303	H9
D304	H8
D601	F4
D606	F4
D607	E4
D700	E7
D701	E7
D702	F9
D703	L9
D800	F10
D902	I3
D903	I3

TX-RX UNIT (X57-586X-XX) Component side view

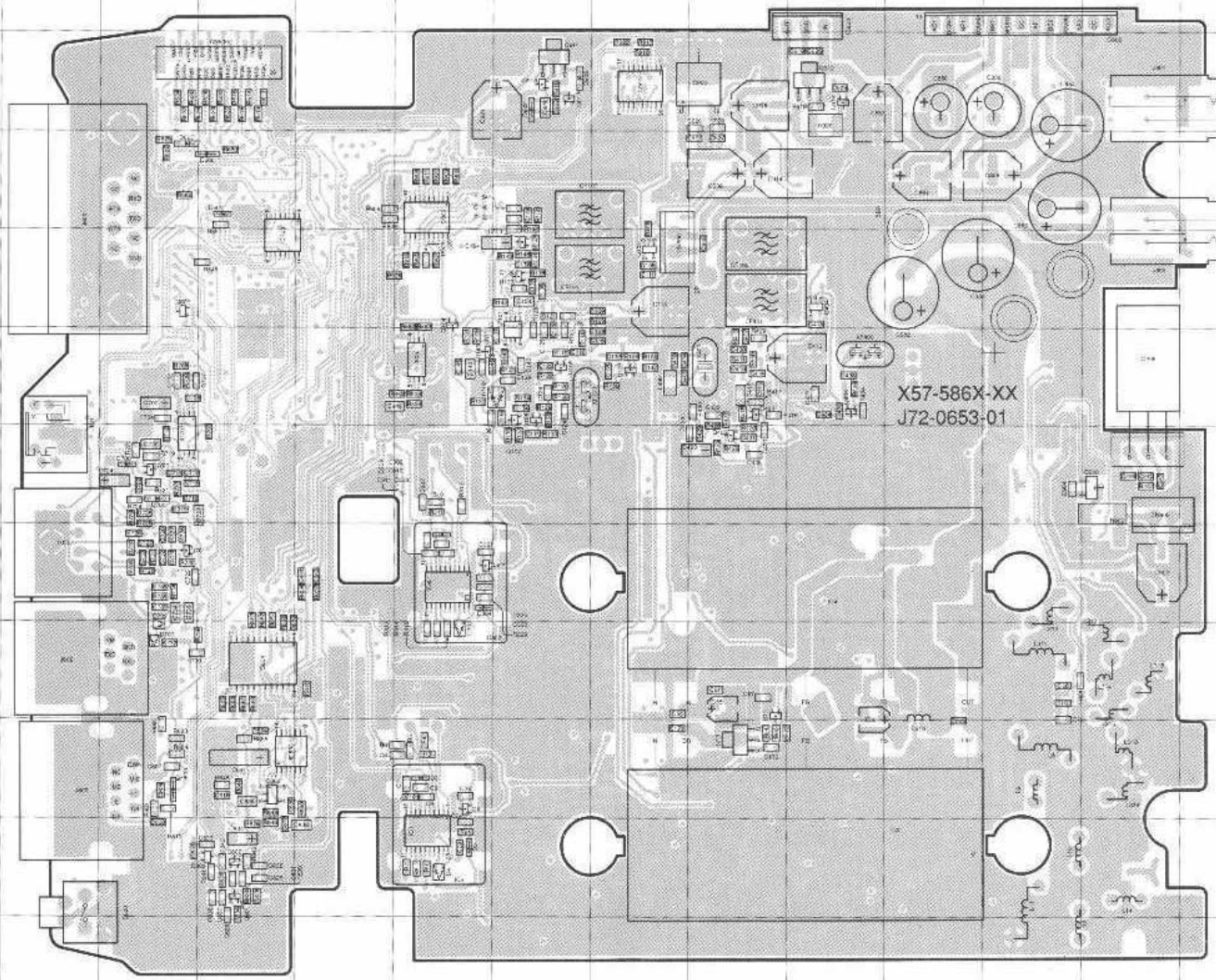

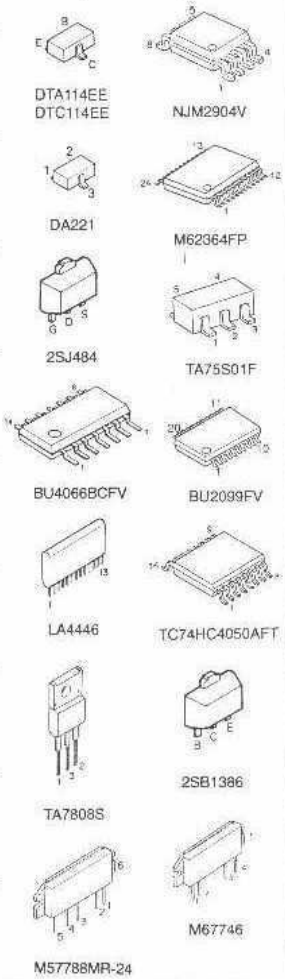

Pattern 1
Pattern 2
Pattern 3
Pattern 4

Component side

Foil side

TM-D700A/E PC BOARD VIEWS

TX-RX UNIT
(Foil side)

Ref.NO.	Address
IC100	K6
IC200	E7
IC300	M9
IC303	K8
IC304	L8
IC400	I6
IC501	G8
IC600	O6
IC601	M5
IC602	M5
IC603	K4
IC604	N5
IC700	O7
IC702	N8
IC800	O9
IC801	N11
IC807	G3
IC808	G3
Q1	L10
Q2	L10
Q3	L11
Q6	K11
Q7	K12
Q8	K11
Q9	K10
Q100	J4
Q101	J5
Q102	K6
Q113	I11
Q200	I9
Q201	I10
Q202	I11
Q203	I10
Q204	G10
Q205	G11
Q207	G11
Q209	E7
Q210	H11
Q300	L8
Q301	L8
Q302	L8
Q304	L9
Q305	H7
Q306	K7
Q307	K9
Q308	K8
Q309	J9
Q310	J9
Q400	H5
Q401	H5
Q500	H7
Q501	J7
Q502	I7
Q503	G7
Q505	H8
Q506	H8
Q507	I8
Q508	G9
Q509	F8
Q600	O6
Q601	O11

Ref.NO.	Address
Q603	M5
Q604	K4
Q702	O7
Q800	N10
Q804	G3
Q805	F4
Q903	I4
Q904	H4
Q905	I4
Q906	J4
Q907	J4
Q908	I4
Q909	J4
D1	L9
D2	L9
D6	J10
D7	I10
D9	K12
D11	K11
D12	K11
D13	K10
D14	F10
D15	F10
D16	F11
D17	G11
D18	F11
D19	F12
D100	K5
D101	J5
D200	I11
D201	I11
D202	I11
D203	H10
D204	I11
D205	I11
D206	H11
D207	H11
D208	H11
D209	H11
D210	G10
D211	G10
D213	G11
D214	G11
D216	I11
D217	G11
D300	L6
D301	L6
D305	K9
D306	K9
D307	K9
D309	J8
D310	J8
D312	J9
D313	G8
D314	F9
D315	G9
D316	F9
D317	E8
D318	E8
D400	H5
D401	I5

TX-RX UNIT (X57-586X-XX) Foil side view

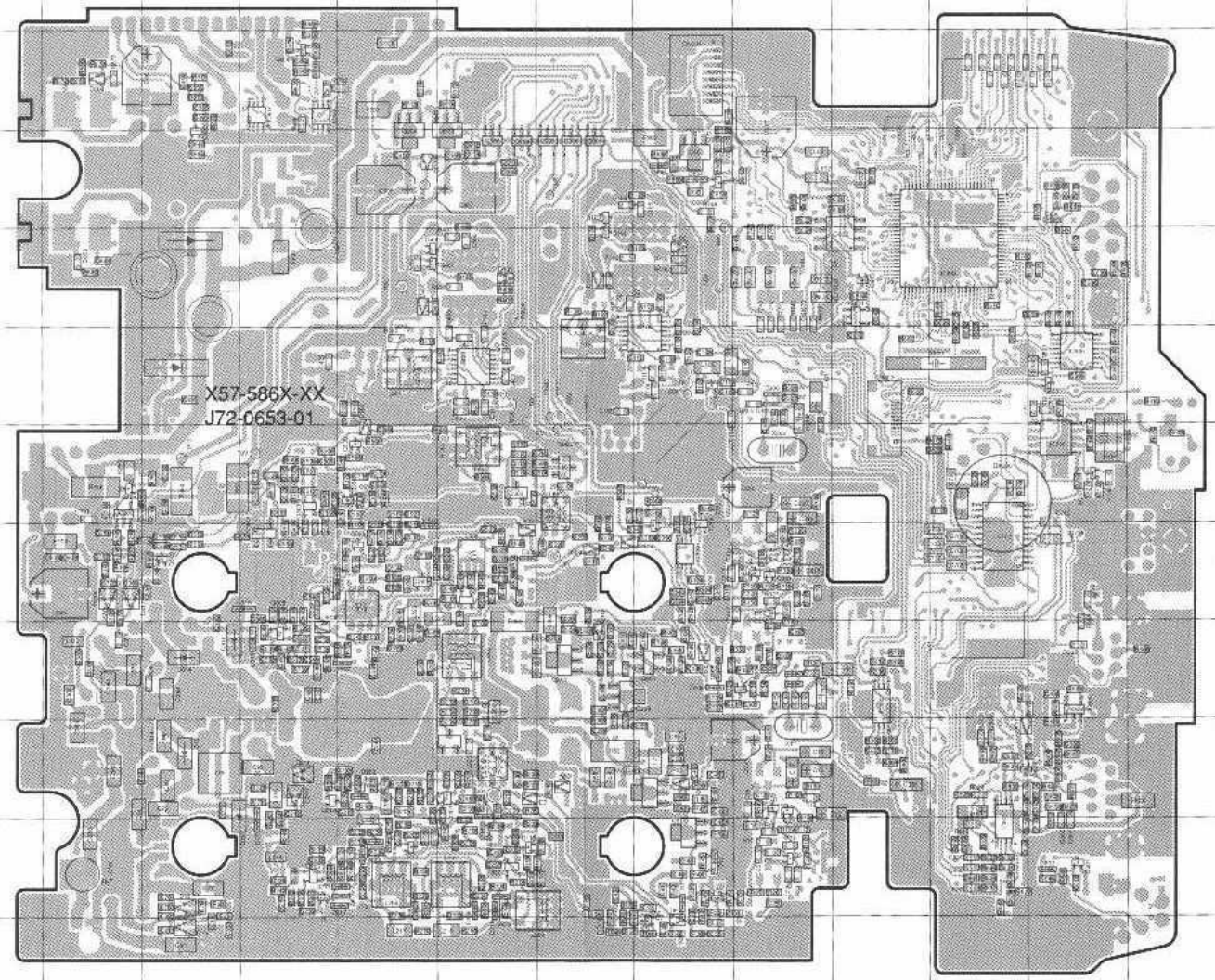

Ref.NO.	Address
D500	H7
D502	I8
D503	I8
D505	G9
D507	H9
D509	G8
D510	H8
D600	O4

Ref.NO.	Address
D602	O11
D604	K4
D605	K4
D801	N10
D803	E3
D900	H4
D904	F6
D905	F5

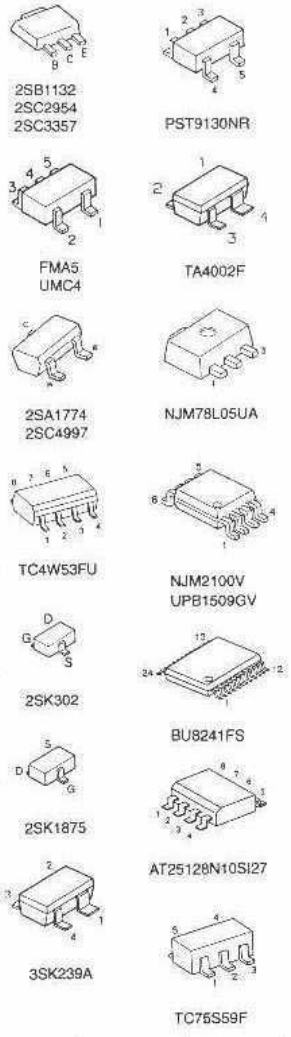

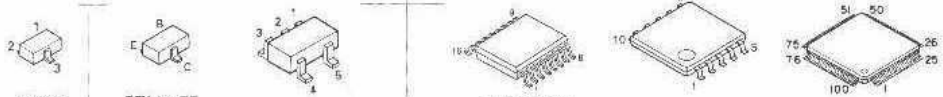

MA742

DTA144EE
2SC4617
2SC5108
2SC5066

TC7S66FU

TA31136FN
ADM202EARU
ADM3202ARU

LC73881M

78F4218GCJVYC
78F4218GCJVZC

Component side

Pattern 1
Pattern 2
Pattern 3
Pattern 4

Foil side

TX-RX UNIT
(Component side) + (Foil side)

Ref.NO.	Address
IC1	H11
IC2	H11
IC3	L11
IC4	L8
IC100	I6
IC101	I6
IC200	O7
IC300	G9
IC301	H8
IC302	H9
IC303	I8
IC304	H8
IC400	K6
IC501	M8
IC600	E6
IC601	G5
IC602	G5
IC603	I4
IC604	F5
IC700	E7
IC701	E7
IC702	F8
IC703	F5
IC800	E9
IC801	F11
IC802	F10
IC803	I4
IC804	F9
IC805	H6
IC806	2N
IC807	M3
IC808	M3
IC900	H4
IC901	J3
IC903	L2
IC904	K3
Q1	H10
Q2	H10
Q3	H11
Q4	H10
Q6	I11
Q7	I12
Q8	I11
Q9	I10
Q10	K10
Q11	K9
Q100	J4
Q101	J5
Q102	I6
Q103	J5
Q104	H5
Q105	I6
Q106	I6
Q107	I6
Q108	I5
Q110	I5
Q111	H6
Q112	J6
Q113	K11
Q200	K9
Q201	K10
Q202	K11
Q203	K10
Q204	M10
Q205	M11
Q207	M11
Q208	O6
Q209	O7

Ref.NO.	Address
Q210	L11
Q300	H8
Q301	H8
Q302	H9
Q303	H8
Q304	H9
Q305	L7
Q306	I8
Q307	I9
Q308	I8
Q309	J9
Q310	J9
Q400	L5
Q401	L5
Q402	K6
Q404	L5
Q405	K7
Q406	L6
Q500	L7
Q501	J7
Q502	K7
Q503	M7
Q505	L8
Q506	L8
Q507	K8
Q508	M9
Q509	N8
Q600	E6
Q601	F11
Q603	G5
Q604	I4
Q700	E7
Q701	E8
Q702	F7
Q800	E10
Q801	F11
Q802	F11
Q803	F11
Q804	M3
Q805	N4
Q807	E5
Q900	O7
Q903	K4
Q904	L4
Q905	K4
Q906	J4
Q907	J4
Q908	K4
Q909	J4
Q910	I3
Q911	I3
Q912	L3
Q913	I3
Q914	L3
D1	H9
D2	H9
D3	H10
D4	H11
D5	H11
D6	J10
D7	K10
D9	I12
D11	I11
D12	I11
D13	I10
D14	N10
D15	N10
D16	M11

TX-RX UNIT (X57-586X-XX) Component side + Foil side view

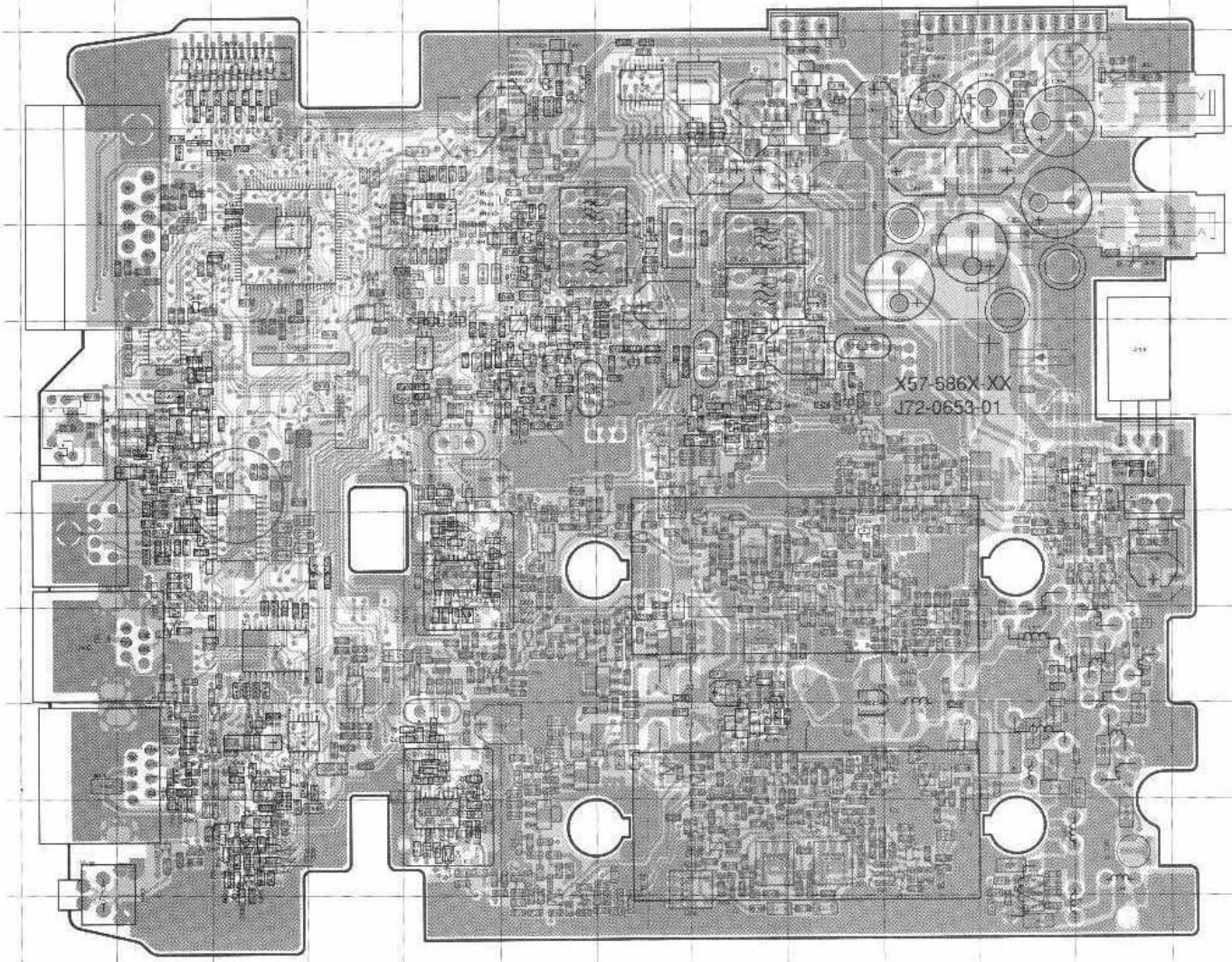

Ref.NO.	Address
D17	M11
D18	N11
D19	N12
D100	I5
D101	J5
D102	I6
D200	K10
D201	K10

Ref.NO.	Address
D202	K11
D203	L10
D204	K11
D205	K11
D206	L11
D207	L11
D208	L11
D209	L11

Ref.NO.	Address
D210	M10
D211	M10
D213	L11
D214	L11
D216	K11
D217	L11
D300	H6
D301	H6

Ref.NO.	Address
D302	H8
D303	H9
D304	H8
D305	I9
D306	I9
D307	I9
D309	J9
D310	J8

Ref.NO.	Address
D312	J9
D313	M8
D314	N9
D315	M9
D316	N9
D317	N8
D318	O8
D400	L5

Ref.NO.	Address
D401	K5
D500	L7
D502	K8
D503	K8
D505	M8
D507	L9
D509	M8
D510	L8

Ref.NO.	Address
D600	E4
D601	F4
D602	E11
D604	I4
D605	I4
D606	I4
D607	F4
D700	E7

Ref.NO.	Address
D701	E7
D702	E9
D703	E9
D800	E10
D801	F10
D803	O3
D900	L4
D902	I3

Ref.NO.	Address
D903	I3
D904	N6
D905	N5

● Connect 1 and 4.

Component side
Pattern 1
Pattern 2
Pattern 3
Pattern 4
Foil side

TM-D700A/E PC BOARD VIEWS

TNC UNIT (X52-3310-00)
Component side view

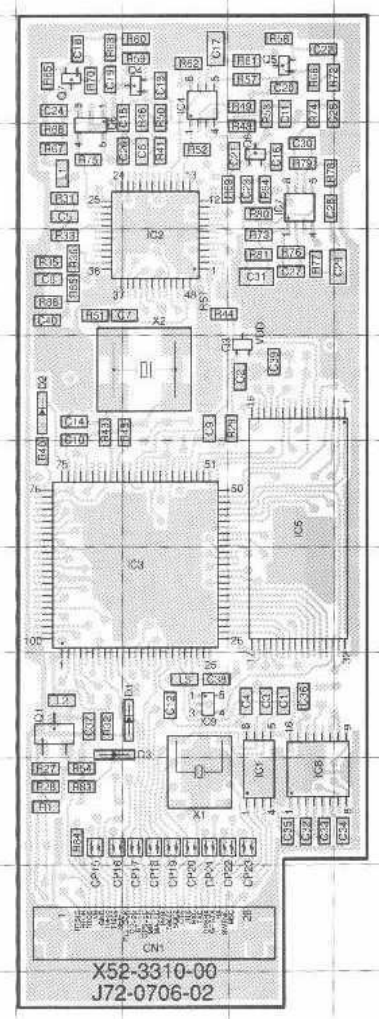

TNC UNIT
(Component side)

Ref No.	Address
IC1	10D
IC2	5C
IC3	8C
IC4	3C
IC5	7D
IC6	4B
IC7	4D
IC8	10D
IC9	9C
Q1	9B
Q3	6D
Q4	3C
Q5	3D
Q6	4D
Q7	3B
D1	9C
D2	6B
D3	10B

2SA1774

TA75S393F

2SA1162
2SC4617

TGT0210Q
TMT0210Q

KM681000CLTI7L

Component side
Pattern 1
Pattern 2
Pattern 3
Pattern 4
Foil side

TNC UNIT (X52-3310-00)
Foil side view

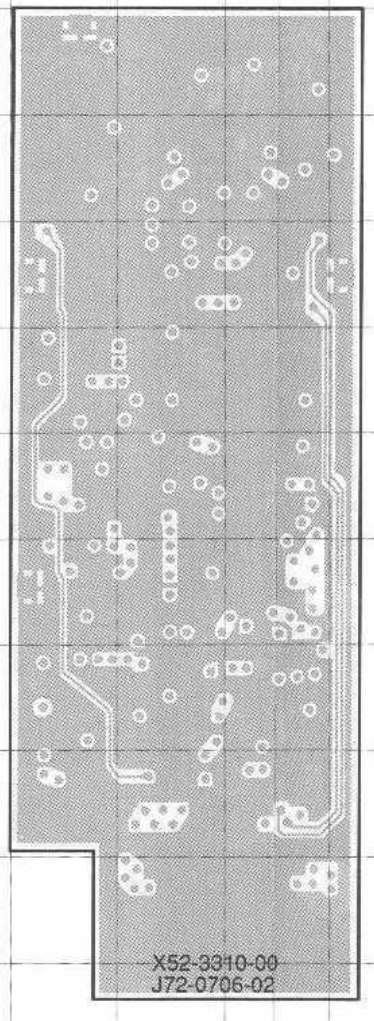

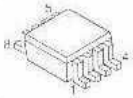
TA75W01FU

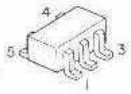
TC7SU04FU

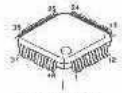
TGT0210Q
TMT0210Q

Component side
Pattern 1
Pattern 2
Pattern 3
Pattern 4
Foil side

TNC UNIT (X52-3310-00)
Component side + Foil side view

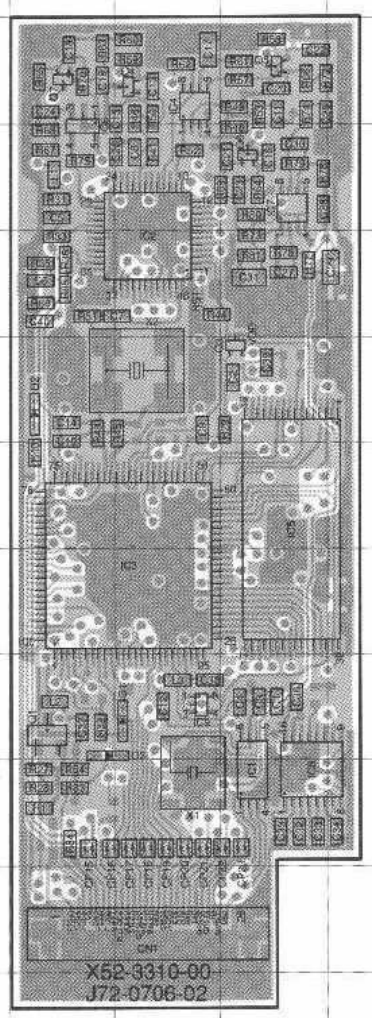

TNC UNIT
(Component side) + (Foil side)

Ref.NO.	Address
IC1	10P
IC2	5O
IC3	8O
IC4	3O
IC5	7P
IC6	4N
IC7	4P
IC8	10P
IC9	9O
Q1	9N
Q3	6P
Q4	3O
Q5	3P
Q6	4P
Q7	3N
D1	9O
D2	6N
D3	9N

2SA1774

TA75S393F

2SA1162
2SC4617

Component side
Pattern 1
Pattern 2
Pattern 3
Pattern 4
Foil side

● Connect 1 and 4.

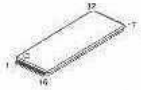
KM681000CLTI7L

PANEL UNIT (X54-3290-00) Component side view

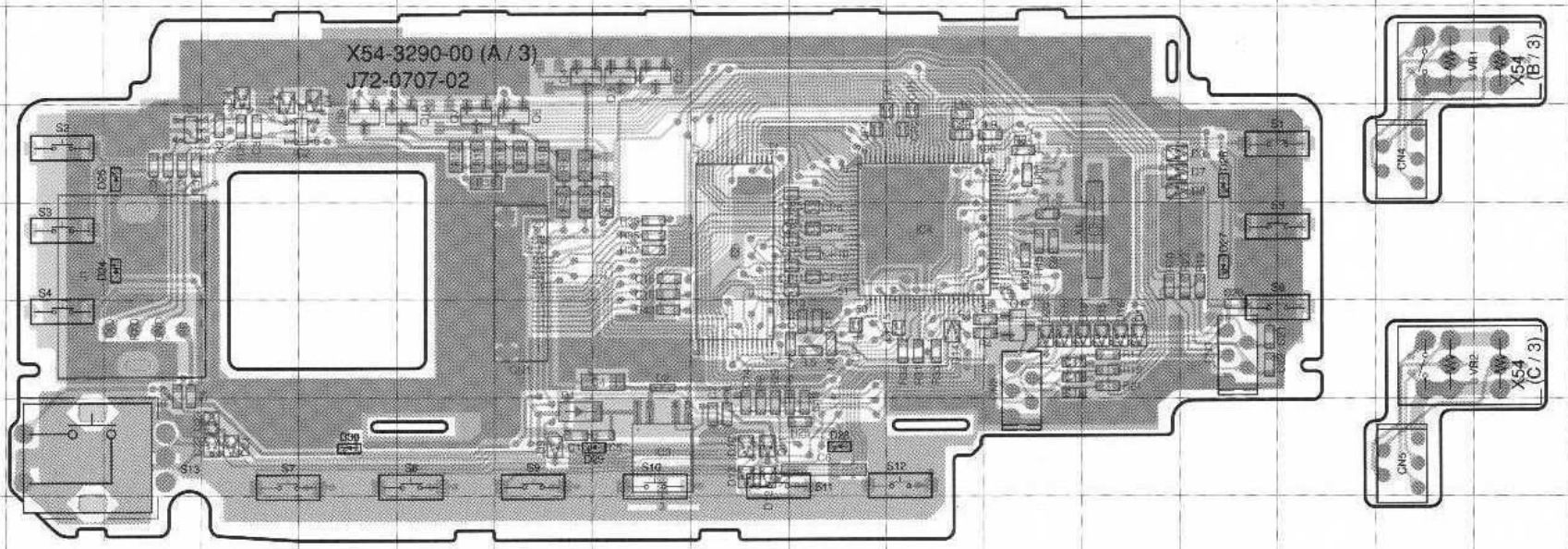

PANEL UNIT
(Component side)

Ref.NO.	Address
IC1	5C
IC2	5E
IC3	8H
IC4	6K
IC5	5I
Q1	7L
Q2	4H
Q3	4H
Q4	4G
Q6	5G
Q7	5F
Q9	5E
Q10	5F
D1	8G
D2	7H
D3	5M
D4	4E
D5	4D
D6	4D
D7	5M
D8	5M
D9	8G
D10	8I
D11	8I
D12	8I
D13	8I
D14	7K
D15	7M
D16	7M
D17	7M
D18	7L
D19	7M
D20	7L
D21	8D
D22	8D
D23	8D
D24	6C
D25	5C
D26	5N
D27	6N
D28	8J
D29	8H
D30	8E

Component side
Pattern 1
Pattern 2
Foil side

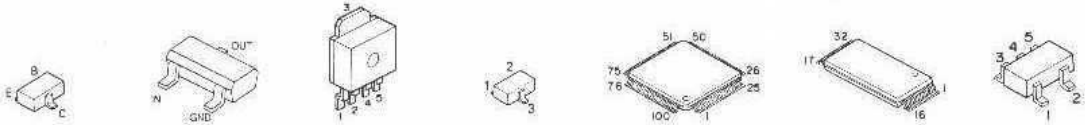

2SA1162 DTC143EKA L78LR05B-FA DA221 30622M8759GP AT29C020-90TI TC4SB1F

TM-D700A/E PC BOARD VIEWS

PANEL UNIT
(Foil side)

Ref.NO.	Address
IC1	5Q
IC2	5O
IC3	8L
IC4	6I
IC5	6K
Q1	7H
Q2	4L
Q3	4L
Q4	4M
Q6	5M
Q7	5N
Q9	5O
Q10	5N
D1	8M
D2	7L
D3	5G
D4	4O
D5	4P
D6	4P
D7	5G
D8	5G
D9	8M
D10	8K
D11	8K
D12	8K
D13	8K
D14	7I
D15	7G
D16	7G
D17	7G
D18	7H
D19	7G
D20	7H
D21	8P
D22	8P
D23	8P
D24	6Q
D25	5Q
D26	5F
D27	6F
D28	8J
D29	8L
D30	8O

PANEL UNIT (X54-3290-00) Foil side view

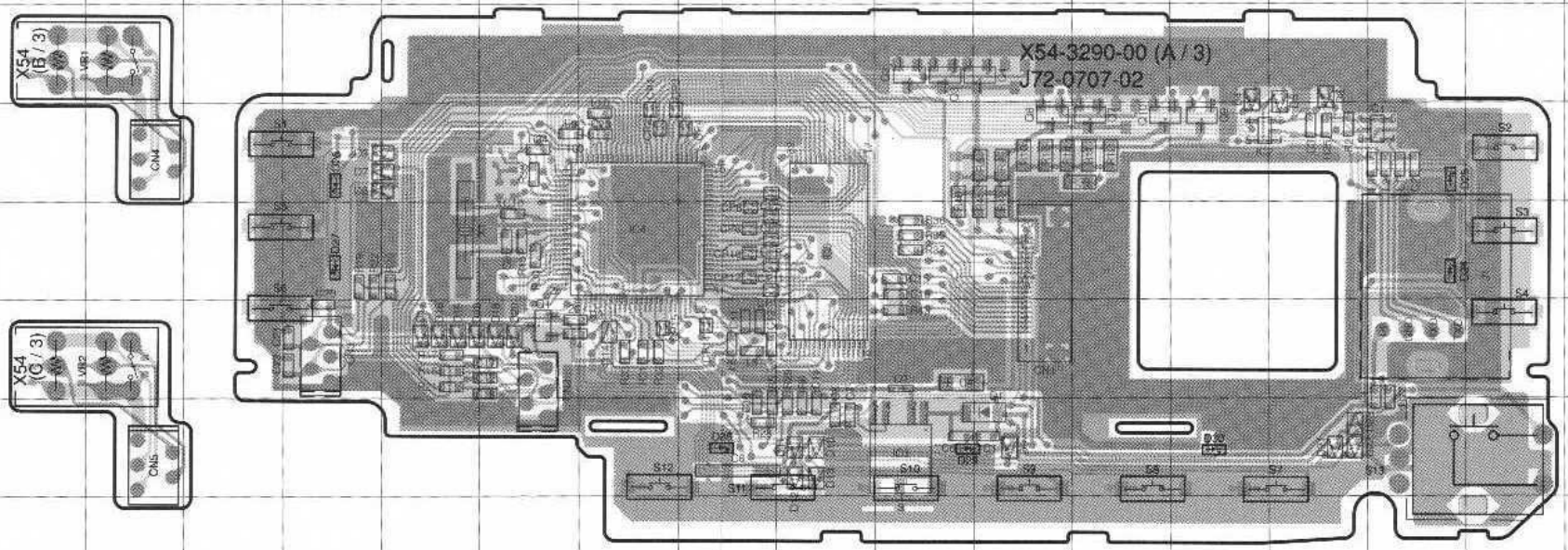

Pattern 1 — Component side
Pattern 2 — Foil side

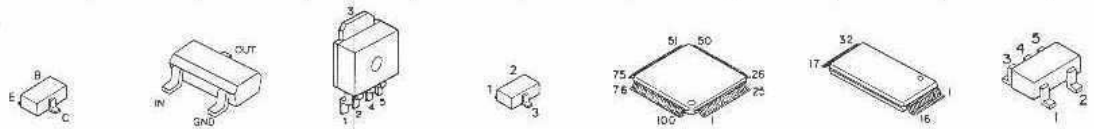

TM-D700A/E TM-D700A/E

BLOCK DIAGRAM

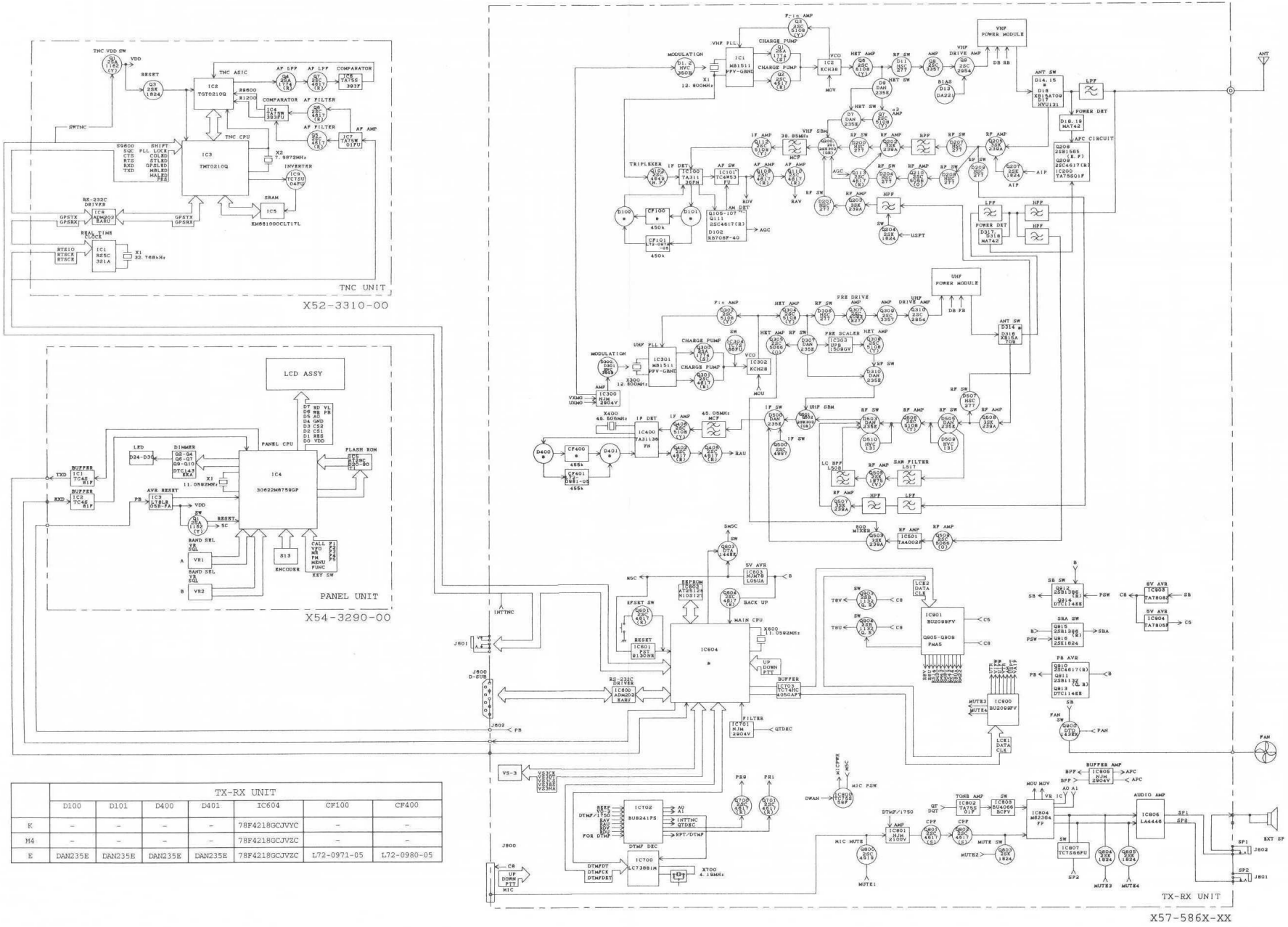

	TX-RX UNIT						
	D100	D101	D400	D401	IC604	CF100	CF400
K	–	–	–	–	78F4218GCJVYC	–	–
M4	–	–	–	–	78F4218GCJVZC	–	–
E	DAN235E	DAN235E	DAN235E	DAN235E	78F4218GCJVZC	L72-0971-05	L72-0980-05

WIRING DIAGRAM

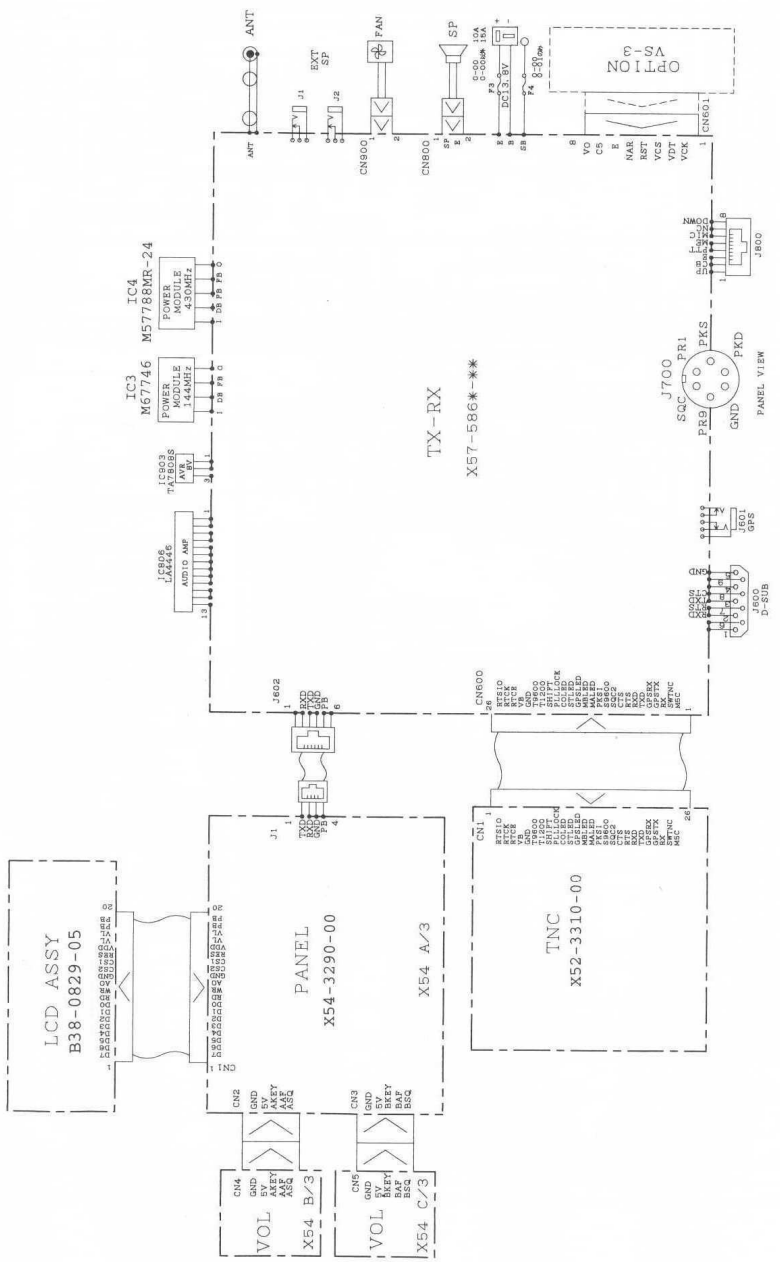

LEVEL DIAGRAM

Transmitter Section

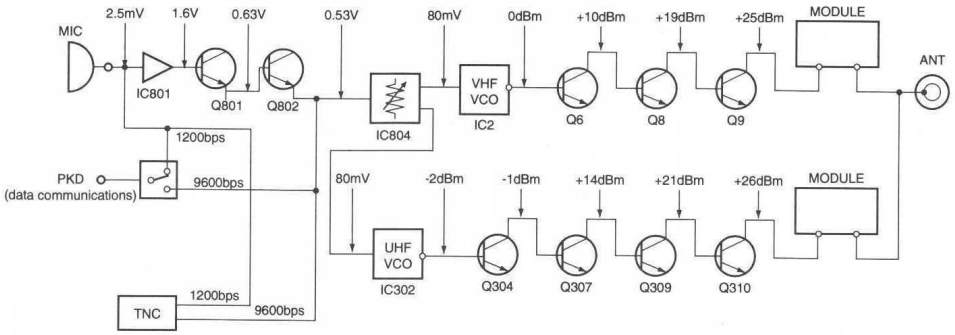

Note1: Set the AG so that the microphone socket input is 3kHz deviation at 1kHz modulation.
The data communication connector input level is 3kHz deviation at 1kHz modulation for 1200bps and 2kHz deviation at 1kHz modulation for 9600bps.

Note2: The transmit frequency is 145.0 or 435.0MHz.
Note3: The HI/MID/LOW switch is set to HI.
Note4: The measurements with the power meter, except for the ANT connector, are the values with the APC off.

Receiver Section

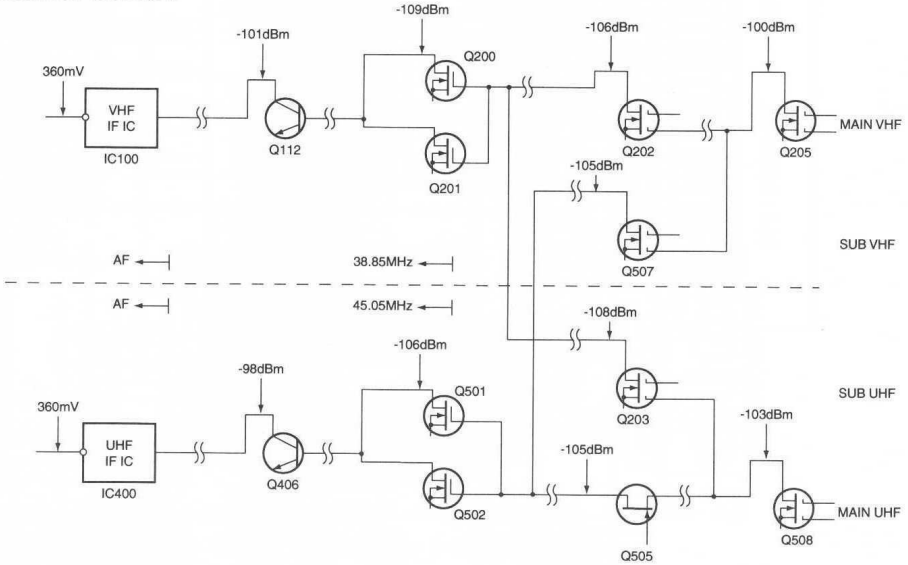

Note1: The 12dB SINAD levels were plotted using a standard signal generator through a 0.01μF ceramic capacitor at each point from the RF to the first IF.

Note2: The AF levels were measured with an AF voltmeter when the -73dBm (50μV) standard signal generator signal modulated by a 1kHz modulation frequency and a 3kHz deviation was received and the AF output was adjusted to 0.63V/8Ω by the AF VR.

TM-D700A/E SCHEMATIC DIAGRAM

X57-586*-** TX-RX UNIT (CONTROL)

D600, 602, 605, 700 : MA2S111
D601 : 015AZ5.6
D604 : DTZ7.5(B)
D606, 607 : MA728
D701, 800 : 1SS355
D801 : DAN222
D702, 703 : DA221
IC600 : ADM202EARU or ADM3202ARU
IC601 : PST9130NR
IC602 : AT25128N10SI27
IC603 : NJM78L05UA
IC604 : 78F4218GCJVYC(0-11)
IC604 : 78F4218GCJVZC(0-21, 2-71)
IC700 :
IC701 :

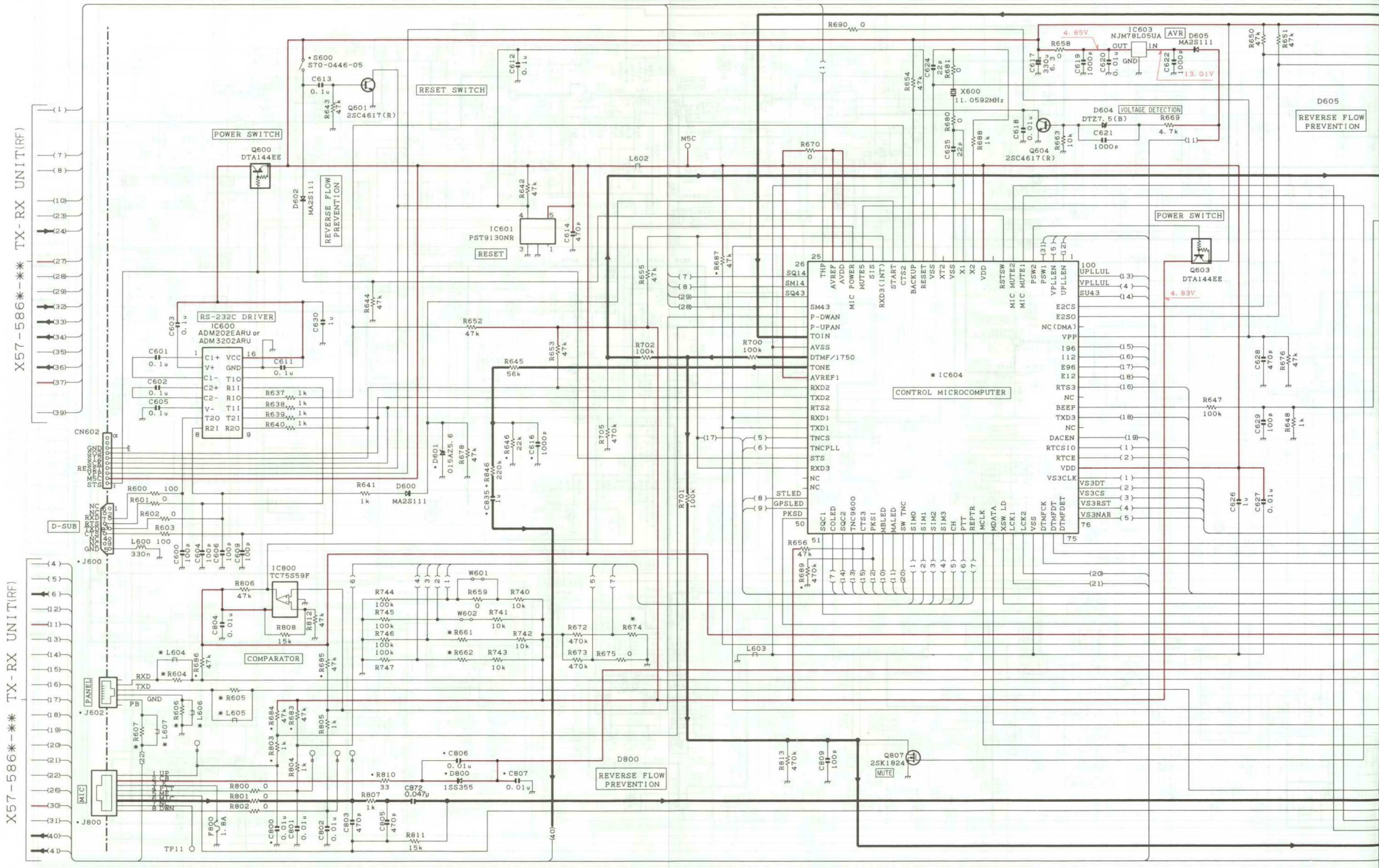

LC73881M	IC702 :BU8241FS	IC800 :TC75S59F	Q702 :2SA1774(S)	Q600, 603 :DTA144EE	Q801, 802 :2SC4617(S)
NJM2904V	IC703 :TC74HC4050AFT	IC801 :NJM2100V	Q601, 604, 700, 701 :2SC4617(R)	Q800 :2SC4919	Q803, 807 :2SK1824

		R604-R608	R661	R662	R827	R830	R831	R888	R828	IC604	L604-L608	R674
0-11	K	0	0	0	15k	270	390	120k	10k	78F4218GCJVYC	NO	NO
0-21	M4	0	NO	NO	15k	270k	390	120k	33k	78F4218GCJVZC	NO	0
2-71	E	NO	0	NO	220k	680k	2.2k	330k	33k	78F4218GCJVZC	L92-0140-05	0

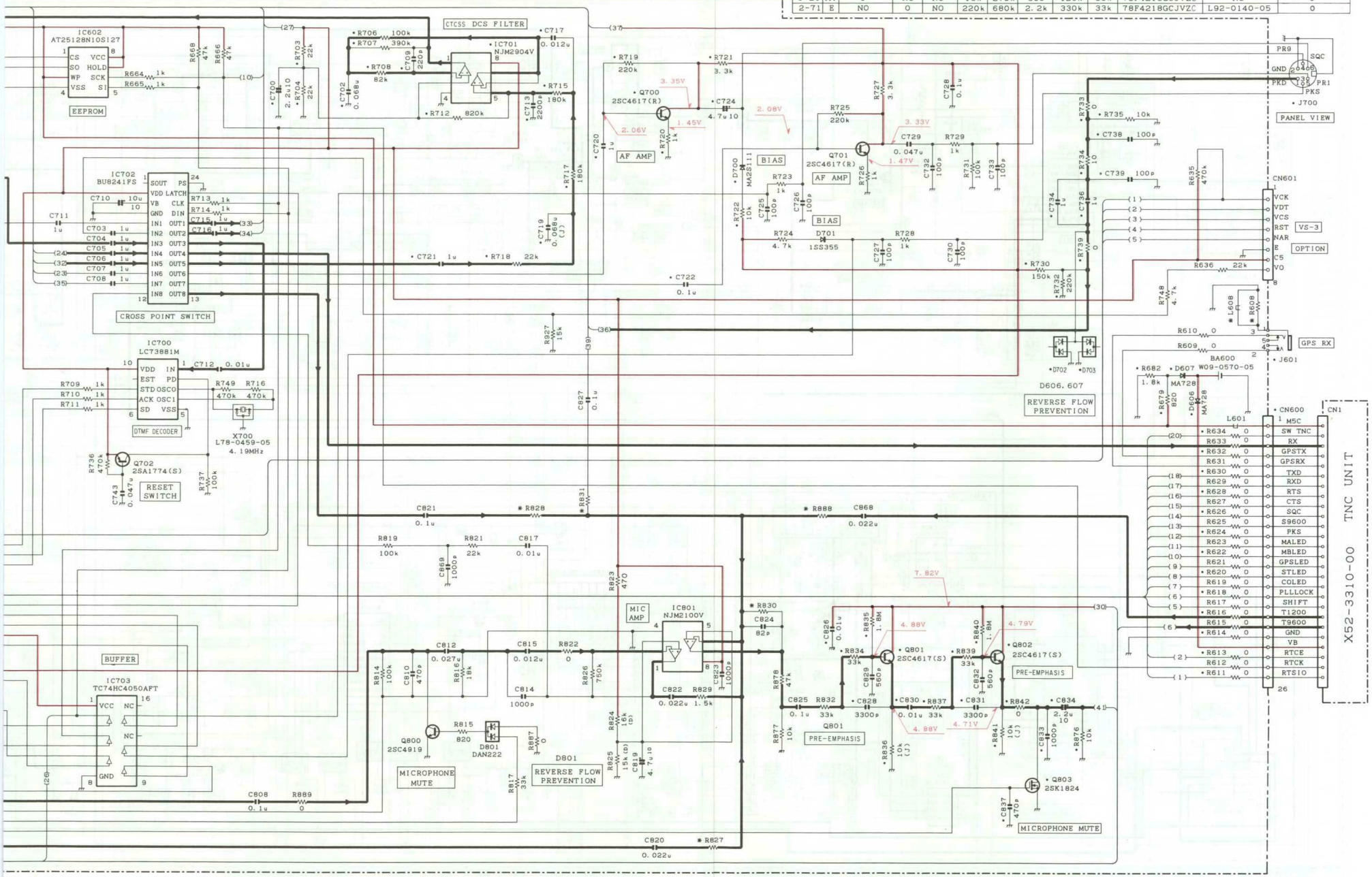

Note : Component marked with a dot (•) are parts of pattern1.

X52-3310-00 TNC UNIT

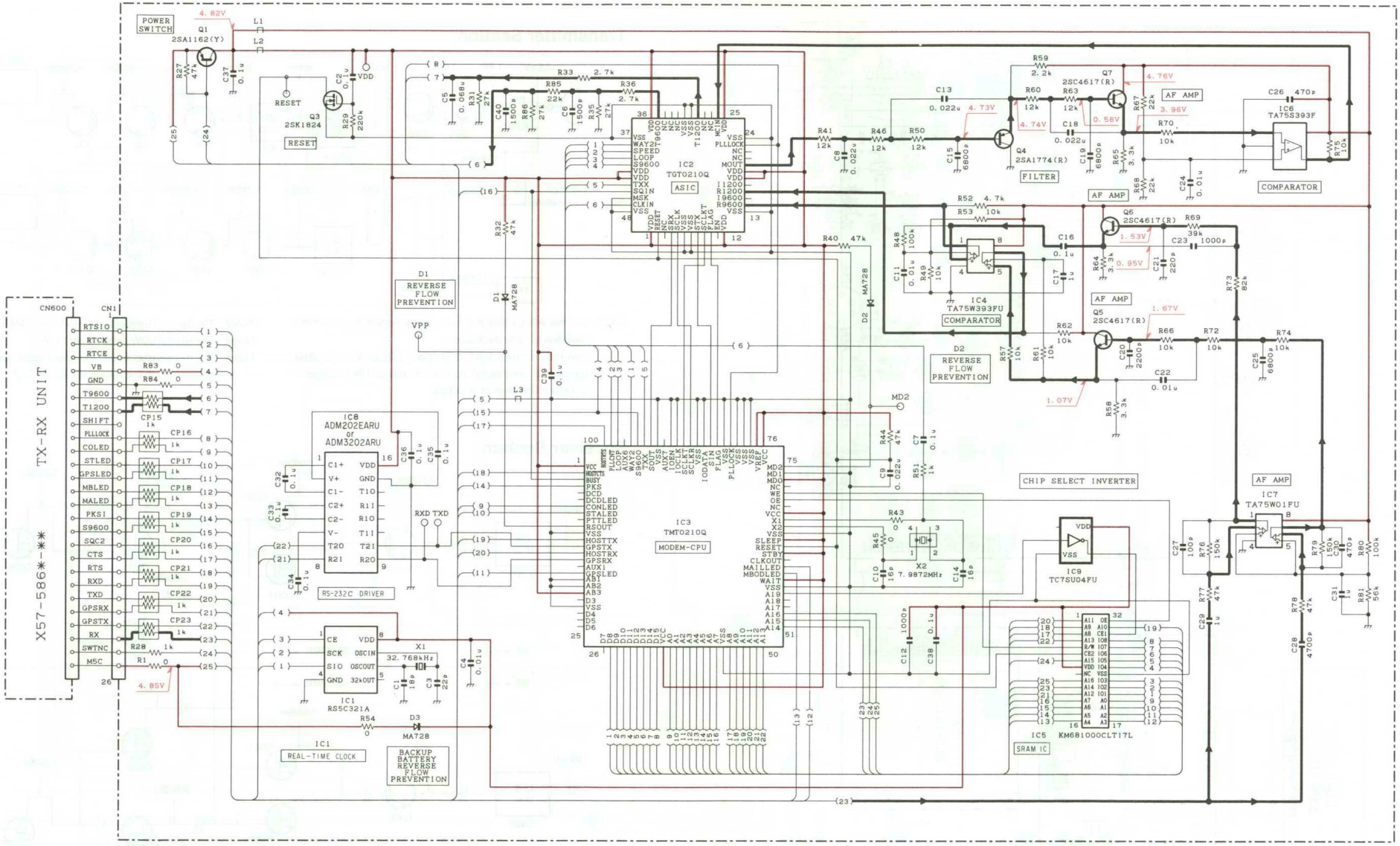

X52-3310-00

D1-3	:MA728	IC5	:KM681000CLT17L	IC8	:ADM202EARU or ADM3202ARU	Q1	:2SA1162(Y)		
IC1	:RS5C321A			IC9	:TC7SU04FU	Q3	:2SK1824		
IC2	:TGT0210Q	IC6	:TA75S393F			Q4	:2SA1774(R)		
IC3	:TMT0210Q	IC7	:TA75W01FU			Q5-7	:2SC4617(R)		
IC4	:TA75W393FU								

X54-3290-00

D2	:MA2S111	IC1, 2	:TC4S81F	Q1	:2SA1162(Y)		
D3-23	:DA221	IC3	:L78LR05B-FA	Q2-4, 6, 7, 9, 10	:DTC143EKA		
D24-30	:B30-2215-05	IC4	:30622M8759GP				
		IC5	:AT29C020-90TI				

X57-586*-** TX-RX UNIT(RF)

D1. 2. 202. 205. 206. 216. 300. 301 :HVC350B
D3. 5. 213. 214. 217. 302. 304 :MA2S111
D4. 13. 303. 312. 803 :DA221
D6. 309. 900
D7. 9. 100. 101. 307. 310. 400. 401. 500. 503. 505
D11. 200. 201. 203. 204. 207-209. 305. 306. 502. 507 :DAN222 :DAN235E :HSC277
D12
D14. 15. 314
D16. 316 :1SS355 :MA4PH633 :XB15A709
D17. 313. 315
D18. 19. 210. 211. 317. 318 :HVU131 :MA742 :RB706F-40
D102
D509. 510 :HVC131
D902 :UDZ10(B)
D903 :UDZ18(B)
D904. 905 :DSM3MA1
IC1 :MB1511PFV-GBND
IC2 :KCH38
IC100. 400 :TA31136FN
IC101. 807. 808 :TC4W53FU
IC200. 802 :TA75S01F
IC300. 805 :NJM2904V
IC301 :MB151
IC302 :KCH28
IC303 :UPB15

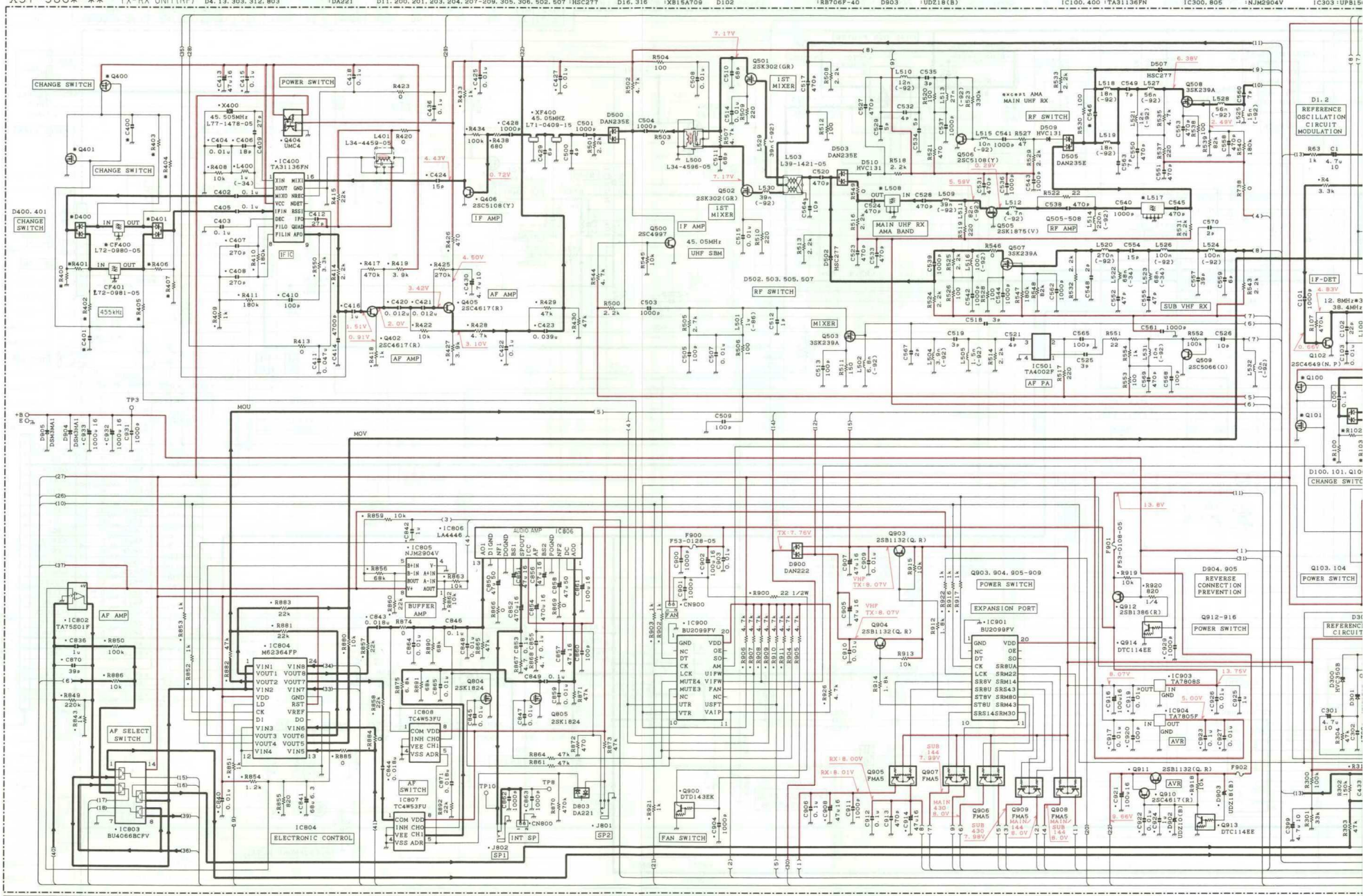

	C104	C106	C220	C221	C371	C400	C401	C546	R100	R102	R103	R105	R108	R109	R110	R113	R147	R400	R401	R402	R403	R404	R405	R406	R407	D100	D101	D400	D401	Q100	Q101	Q400	Q401	CF100	CF400	L508	L517
0-11 K	NO	NO	2p	3p	NO	NO	NO	15p	NO	0	NO	NO	NO	0	NO	NO	3.9k	NO	0	NO	NO	NO	0	NO	NO	NO	NO	NO	NO	NO	NO	NO	NO	NO	NO	L79-1526-05	L79-1575-05
0-21 M4	NO	NO	2.5p	7p	NO	NO	NO	10p	NO	0	NO	NO	NO	0	NO	NO	3.9k	NO	0	NO	NO	NO	0	NO	NO	NO	NO	NO	NO	NO	NO	NO	NO	NO	NO	L79-1525-05	L79-1574-05
2-71 E	0.1u	0.1u	2.5p	7p	0.1u	0.1u	0.01u	10p	15k	NO	22k	22k	22k	NO	22k	15k	5.6k	15k	NO	22k	22k	22k	22k	NO	15k	DAN235E	DAN235E	DAN235E	DAN235E	2SJ243	2SK1824	2SJ243	2SK1824	L72-0971-05	L72-0980-05	L79-1525-06	L79-1574-06

SCHEMATIC DIAGRAM TM-D700A/E

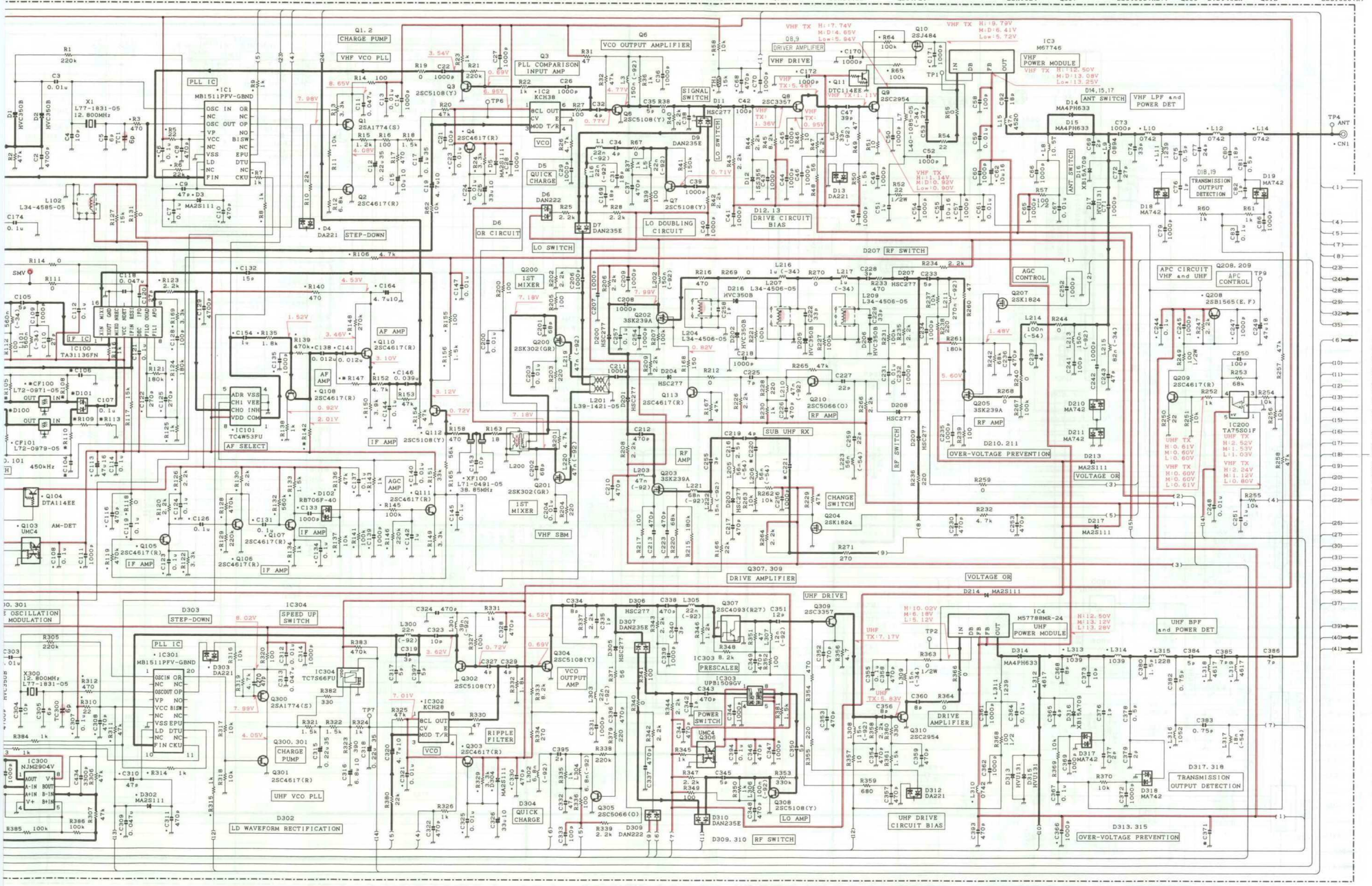

Note : Component marked with a dot (•) are parts of pattern1.

KENWOOD

Communications Division Application Note # AAN-0027

Date: February 27, 2004

Title: TM-D700A INTERNAL CLOCK AND APRS TIME STAMP

If the time indication on APRS data is incorrect or goes beyond 2400 (example 2930), one of the following items may have occurred.

1. The TM-D700A was left disconnected from the power supply for over three months allowing the internal Lithium Ion battery to discharge.
2. The internal Lithium Ion battery was recently replaced and the reset procedure listed below was not performed.
3. The flat cable E37-0840-05 between the Control PCB and the TNC PCB within the TM-D700A was disconnected.

Performing the following reset procedure, followed by setting the time and date will alleviate this condition.

RESET PROCEDURE:

Press and hold the REV (F3) and Low (F4) keys and turn on the TM-D700A.
The frequency display screen will come on and the internal clock is reset to January 1, 2000, 00:00:00".

ADJUSTING THE INTERNAL CLOCK:

Please follow the procedures on page 12 of the TM-D700A "Specialized Communications" Instruction Manual.

NOTES:

A production change was made at S/N 312xxxxx that performs an automatic reset when performing the "Adjusting the internal clock" procedure on page 12. Therefore you do not have to manually perform the reset procedure, but you do have to perform the internal clock adjustment procedure listed on page 12.

Previous APRS data will still be stored in memory with the wrong date stamp. APRS data received after following the procedures listed above will have the correct time stamp information.

Copyright © 2004 All Rights Resevered. Kenwood USA Corporation JLT-225 Printed in USA

Kenwood USA Corporation, 2201 E. Dominguez Street, Long Beach, CA 90801

KENWOOD

Communications Division Service Bulletin # ATB-0029

Date: April 14, 2004

Title: TM-D700A CROSS BAND REPEAT AUDIO QUALITY IMPROVEMENT

At Serial Number 511xxxxx, a production change was made to improve cross band repeat audio quality. The value of C821 and R828 on the TX-RX (Control) PCB were changed.

	Original Value	Original P/N	New Value	New P/N
C821	0.1uF	CK73GB1C104K	6800pF	CK73GB1H682K
R828	10K	RK73GB1J103J	8.2K	RK73GB1J822J

The two components are at address location N11 of the foil side view of the TX-RX (Control) PCB on pages 55 and 56 of the Service Manual.

The two components are at address location AH5 of the TX-RX (Control) schematic.

The content of this bulletin is for information only. The improvement is not covered under warranty.

Copyright © 2004 All Rights Resevered. Kenwood USA Corporation B510-04-002 Printed in USA

Kenwood USA Corporation, 2201 E. Dominguez Street, Long Beach, CA 90801