Apr. 2009

SERVICE MANUAL ADDENDUM

IC-7600

CONTENTS

PARTS LIST 1
BOARD LAYOUTS 37
VOLTAGE DIAGRAM 41

PARTS LIST

[LOGIC UNIT]

REF NO.	PARTS NO.	DESCRIPTION	M.	H/V LOCATION
IC1	1130013750	S.IC EM639165TS-7G	T	109/62.6
IC2	1130013750	S.IC EM639165TS-7G	T	84.1/62.6
IC21	1130015113	S.IC JS28F128J3D-75(SX-3073A-3)	T	103.2/37.1
IC51	1130011591	S.IC IDT70V24L15PFG	B	119.8/87.1
IC53	1110005731	S.IC S-80928CNMC-G8Y-G	B	65.8/89.4
IC54	1130007431	S.IC TC7S14FU(TE85R,F)	B	61/88.6
IC55	1130012600	S.IC SN74AHC1G04DCKR	B	58.1/87.9
IC102	1130013010	S.IC SN74AHC1G08DCK3	T	115.7/35.5
IC103	1140014730	S.IC HD6417751RBG240V	T	70.8/30.7
IC105	1130015120	S.IC CY22393FXC(SX-3073F)	B	97.8/18
IC201	1130013750	S.IC EM639165TS-7G	T	8.9/79.8
IC202	1130013750	S.IC EM639165TS-7G	B	14.8/80.1
IC203	1140011571	S.IC HD64404BTDV	T	40.7/80.6
IC208	1130014030	S.IC BD6516F-E2	T	65.8/95.2
IC209	1190001920	S.IC AK5355-VT-E2	B	90.8/6.7
IC210	1190001920	S.IC AK5355-VT-E2	B	76.7/6.7
IC211	1190001910	S.IC AK4384-VT-E2	B	65.9/6.7
IC604	1140014710	S.IC HD64F2370VFQ34V	B	140.3/66.4
IC605	1140015050	S.IC XC9572XL-10TQG100C (SX-3073E)	B	131.9/35.3
IC607	1130013010	S.IC SN74AHC1G08DCK3	T	142.8/87
IC608	1130013010	S.IC SN74AHC1G08DCK3	T	148.5/87
IC609	1130005252	S.IC TC74HC08AF(EL,F)	T	119/77.2
IC610	1130014800	S.IC R1EX24064ATA00A	T	148/64.6
IC661	1130012600	S.IC SN74AHC1G04DCKR	T	147.8/77.7
IC721	1130010111	S.IC TC7WH04FU(TE12L,F)	B	150.5/43.3
IC851	1180003100	S.REG BD9302FP-E2	T	179.5/87.9
IC871	1180003100	S.REG BD9302FP-E2	T	180.1/52.2
IC901	1110003870	S.IC NJM2058M-TE1-#ZZZB	B	141.1/6.6
IC902	1110003870	S.IC NJM2058M-TE1-#ZZZB	B	124.1/6.6
Q725	1510000771	S.TRA 2SA1586-GR(TE85L,F)	B	155/39
Q727	1530003900	S.TRA KTC4075 BL-RTK/P	B	155.1/41.5
Q731	1590003680	S.TRA KRC402 RTK/P	B	147.9/36.7
Q1031	1560001221	S.FET ECH8301-TL-E	T	190.2/30.4
D51	1750001320	S.DIO KDS4148U RTK/P [USA]	T	52.5/27.1
	1750001320	S.DIO KDS4148U RTK/P [EUR]		
	1750001320	S.DIO KDS4148U RTK/P [EUR-1]		
	1750001320	S.DIO KDS4148U RTK/P [ESP]		
	1750001320	S.DIO KDS4148U RTK/P [KOR]		
	1750001320	S.DIO KDS4148U RTK/P [TPE]		
	1750001320	S.DIO KDS4148U RTK/P [CHN]		
	1750001320	S.DIO KDS4148U RTK/P [ITR]		
	1750001320	S.DIO KDS4148U RTK/P [EXP]		
D52	1750001320	S.DIO KDS4148U RTK/P [EUR-1]	T	52.5/23.6
	1750001320	S.DIO KDS4148U RTK/P [ESP]		
	1750001320	S.DIO KDS4148U RTK/P [KOR]		
	1750001320	S.DIO KDS4148U RTK/P [TPE]		
	1750001320	S.DIO KDS4148U RTK/P [CHN]		
	1750001320	S.DIO KDS4148U RTK/P [FRA]		
	1750001320	S.DIO KDS4148U RTK/P [EXP]		
D53	1750001320	S.DIO KDS4148U RTK/P [USA]	T	52.5/25.3
	1750001320	S.DIO KDS4148U RTK/P [EUR]		
	1750001320	S.DIO KDS4148U RTK/P [EUR-1]		
	1750001320	S.DIO KDS4148U RTK/P [TPE]		
	1750001320	S.DIO KDS4148U RTK/P [CHN]		
D54	1750001320	S.DIO KDS4148U RTK/P [USA]	T	52.5/28.8
	1750001320	S.DIO KDS4148U RTK/P [EUR]		
	1750001320	S.DIO KDS4148U RTK/P [EUR-1]		
	1750001320	S.DIO KDS4148U RTK/P [ESP]		
	1750001320	S.DIO KDS4148U RTK/P [KOR]		
	1750001320	S.DIO KDS4148U RTK/P [TPE]		
	1750001320	S.DIO KDS4148U RTK/P [ITR]		
D55	1750001320	S.DIO KDS4148U RTK/P [EUR]	T	52.5/20.1
	1750001320	S.DIO KDS4148U RTK/P [EUR-1]		
	1750001320	S.DIO KDS4148U RTK/P [ESP]		
	1750001320	S.DIO KDS4148U RTK/P [CHN]		
	1750001320	S.DIO KDS4148U RTK/P [ITR]		
	1750001320	S.DIO KDS4148U RTK/P [EXP]		
D56	1750001320	S.DIO KDS4148U RTK/P [EUR-1]	T	52.5/21.8
	1750001320	S.DIO KDS4148U RTK/P [ESP]		
	1750001320	S.DIO KDS4148U RTK/P [KOR]		
	1750001320	S.DIO KDS4148U RTK/P [TPE]		
	1750001320	S.DIO KDS4148U RTK/P [CHN]		
	1750001320	S.DIO KDS4148U RTK/P [FRA]		
	1750001320	S.DIO KDS4148U RTK/P [EXP]		
D57	1750001320	S.DIO KDS4148U RTK/P [USA]	T	52.5/18.3
	1750001320	S.DIO KDS4148U RTK/P [EUR]		
	1750001320	S.DIO KDS4148U RTK/P [EUR-1]		
	1750001320	S.DIO KDS4148U RTK/P [TPE]		
	1750001320	S.DIO KDS4148U RTK/P [CHN]		
D58	1750001320	S.DIO KDS4148U RTK/P [USA]	T	52.5/16.6
	1750001320	S.DIO KDS4148U RTK/P [EUR]		
	1750001320	S.DIO KDS4148U RTK/P [EUR-1]		
	1750001320	S.DIO KDS4148U RTK/P [ESP]		
	1750001320	S.DIO KDS4148U RTK/P [KOR]		
	1750001320	S.DIO KDS4148U RTK/P [ITR]		
D59	1750001320	S.DIO KDS4148U RTK/P [EUR]	T	52.5/14.8
	1750001320	S.DIO KDS4148U RTK/P [EUR-1]		
	1750001320	S.DIO KDS4148U RTK/P [ESP]		
	1750001320	S.DIO KDS4148U RTK/P [CHN]		
	1750001320	S.DIO KDS4148U RTK/P [ITR]		
	1750001320	S.DIO KDS4148U RTK/P [EXP]		
D60	1750001320	S.DIO KDS4148U RTK/P	T	56.3/27.1
D61	1750001320	S.DIO KDS4148U RTK/P	T	56.3/23.6

[LOGIC UNIT]

REF NO.	PARTS NO.	DESCRIPTION	M.	H/V LOCATION
D62	1750001320	S.DIO KDS4148U RTK/P	T	56.3/25.3
D63	1750001320	S.DIO KDS4148U RTK/P	T	56.3/28.8
D66	1750001320	S.DIO KDS4148U RTK/P	T	56.3/18.3
D67	1750001320	S.DIO KDS4148U RTK/P [EUR]	T	56.3/16.6
	1750001320	S.DIO KDS4148U RTK/P [EUR-1]		
	1750001320	S.DIO KDS4148U RTK/P [ITR]		
	1750001320	S.DIO KDS4148U RTK/P [FRA]		
D68	1750001320	S.DIO KDS4148U RTK/P	T	56.3/14.8
D101	1750001320	S.DIO KDS4148U RTK/P	B	66.5/18.7
D102	1750001320	S.DIO KDS4148U RTK/P	B	68.2/18.7
D206	1790000980	S.DIO MA742(TX)	T	45.8/95.6
D207	1790000980	S.DIO MA742(TX)	T	49.2/95.6
D711	1750001320	S.DIO KDS4148U RTK/P	B	154.5/63.6
D715	1790001241	S.DIO MA2S7280GL	B	154.5/65.2
D727	1750001320	S.DIO KDS4148U RTK/P	B	155.1/43.7
D731	1750001180	S.DIO KDS122 RTK/P	B	145/36.7
D732	1750001180	S.DIO KDS122 RTK/P	B	150.8/36.6
D851	1750000960	S.DIO RB081L-20	T	188.1/88.1
D852	1750000960	S.DIO RB081L-20	T	171/86.2
D871	1750000960	S.DIO RB081L-20	T	171.4/52.2
D872	1750000960	S.DIO RB081L-20	T	188.7/52.2
D901	1790000980	S.DIO MA742(TX)	B	161.5/33.9
D902	1790000980	S.DIO MA742(TX)	B	176.5/33.9
D903	1790000980	S.DIO MA742(TX)	B	164/33.9
D904	1790000980	S.DIO MA742(TX)	B	166.5/33.9
D905	1790000980	S.DIO MA742(TX)	B	169/33.9
D906	1790000980	S.DIO MA742(TX)	B	171.5/33.9
D907	1790000980	S.DIO MA742(TX)	B	174/33.9
D909	1790000980	S.DIO MA742(TX)	T	120.5/11.1
D910	1790000980	S.DIO MA742(TX)	T	120.5/13.6
D911	1790000980	S.DIO MA742(TX)	T	101.3/6.3
D912	1790000980	S.DIO MA742(TX)	T	101.3/3.8
D913	1790000980	S.DIO MA742(TX)	B	159.6/31.1
X101	6050011610	S.XTA CR-751 SMD-49 25.000 MHz	T	97.8/18.1
X201	6050010680	S.XTA CR-628 SMD-49 24.576 MHz	T	36.8/63.7
X202	6050011910	S.XTA CR-780 DSX530G 48 MHz	T	37.6/97.5
X601	6050011810	S.XTA CR-755 SMD-49 15.9744 MHz	T	126.6/65.3
L801	6200005011	S.COI NLV25T-100J	T	63/8
L803	6200005011	S.COI NLV25T-100J	B	157.1/32.2
L851	6200013280	S.COI SLF10145T-330M1R6-PF	T	196.3/89.3
L852	6200013280	S.COI SLF10145T-330M1R6-PF	T	164.1/83.7
L853	6200010881	S.COI CDRH124NP-330MC	T	192.9/77.3
L871	6200013280	S.COI SLF10145T-330M1R6-PF	T	164.6/53.5
L872	6200013280	S.COI SLF10145T-330M1R6-PF	T	196.9/49.9
L873	6200010881	S.COI CDRH124NP-330MC	T	193.4/62
R1	7030003520	S.RES ERJ3GEYJ 472 V (4.7K)	T	107.7/24.3
R51	7030003520	S.RES ERJ3GEYJ 472 V (4.7K)	T	130.2/45.4
R52	7030003560	S.RES ERJ3GEYJ 103 V (10K)	B	63.2/89.4
R53	7030003560	S.RES ERJ3GEYJ 103 V (10K)	B	109.6/87.6
R54	7030003560	S.RES ERJ3GEYJ 103 V (10K)	B	129.3/88.4
R61	7030003640	S.RES ERJ3GEYJ 473 V (47K)	T	53.6/30.4
R62	7030003640	S.RES ERJ3GEYJ 473 V (47K)	T	56.6/30.4
R91	7030003560	S.RES ERJ3GEYJ 103 V (10K)	T	53.6/43.8
R92	7030003560	S.RES ERJ3GEYJ 103 V (10K)	B	56.6/37.6
R93	7030003560	S.RES ERJ3GEYJ 103 V (10K)	T	56/50.4
R94	7030003560	S.RES ERJ3GEYJ 103 V (10K)	T	55.2/47.4
R95	7030003560	S.RES ERJ3GEYJ 103 V (10K)	T	56.4/47.4
R96	7030003560	S.RES ERJ3GEYJ 103 V (10K)	T	57.6/47.4
R97	7030003560	S.RES ERJ3GEYJ 103 V (10K)	T	57.2/50.4
R98	7030003560	S.RES ERJ3GEYJ 103 V (10K)	T	59.6/50.4
R99	7030003560	S.RES ERJ3GEYJ 103 V (10K)	T	58.8/47.4
R102	7030003560	S.RES ERJ3GEYJ 103 V (10K)	T	71/19
R103	7030003560	S.RES ERJ3GEYJ 103 V (10K)	T	68.6/19
R104	7030003560	S.RES ERJ3GEYJ 103 V (10K)	T	54.8/50.4
R105	7030003560	S.RES ERJ3GEYJ 103 V (10K)	T	58.4/50.4
R106	7030003560	S.RES ERJ3GEYJ 103 V (10K)	B	71/19
R107	7030003560	S.RES ERJ3GEYJ 103 V (10K)	T	67.4/19
R108	7030003560	S.RES ERJ3GEYJ 103 V (10K)	B	69.8/19
R109	7030003560	S.RES ERJ3GEYJ 103 V (10K)	T	69.8/16
R110	7030003560	S.RES ERJ3GEYJ 103 V (10K)	T	71/16
R111	7030003560	S.RES ERJ3GEYJ 103 V (10K)	T	72.2/19
R112	7030003560	S.RES ERJ3GEYJ 103 V (10K)	T	68.6/16
R113	7030003560	S.RES ERJ3GEYJ 103 V (10K)	T	65/16
R114	7030003560	S.RES ERJ3GEYJ 103 V (10K)	T	66.2/16
R115	7030003560	S.RES ERJ3GEYJ 103 V (10K)	T	66.2/19
R116	7030003560	S.RES ERJ3GEYJ 103 V (10K)	T	65/19
R117	7030003260	S.RES ERJ3GEYJ 330 V (33)	T	63.8/19
R118	7030003560	S.RES ERJ3GEYJ 103 V (10K)	T	63.8/16
R119	7030003560	S.RES ERJ3GEYJ 103 V (10K)	T	61.4/19
R120	7030003560	S.RES ERJ3GEYJ 103 V (10K)	B	56.6/24.4
R121	7030003560	S.RES ERJ3GEYJ 103 V (10K)	T	60.2/16
R122	7030003560	S.RES ERJ3GEYJ 103 V (10K)	T	61.4/16
R123	7030003560	S.RES ERJ3GEYJ 103 V (10K)	T	60.2/19
R125	7030003520	S.RES ERJ3GEYJ 472 V (4.7K)	T	67.4/16
R126	7030003560	S.RES ERJ3GEYJ 103 V (10K)	T	69.8/19
R128	7030003560	S.RES ERJ3GEYJ 103 V (10K)	T	72.2/16
R129	7030003560	S.RES ERJ3GEYJ 103 V (10K)	T	73.4/19
R130	7030003560	S.RES ERJ3GEYJ 103 V (10K)	B	73.4/19
R131	7030003560	S.RES ERJ3GEYJ 103 V (10K)	B	75.1/19
R132	7030003560	S.RES ERJ3GEYJ 103 V (10K)	B	72.2/19
R133	7030003560	S.RES ERJ3GEYJ 103 V (10K)	T	73.4/16
R134	7030003200	S.RES ERJ3GEYJ 100 V (10)	T	77.6/19

M.=Mounted side (T: Mounted on the Top side, B: Mounted on the Bottom side)
S.=Surface mount

[LOGIC UNIT]

REF NO.	PARTS NO.	DESCRIPTION	M.	H/V LOCATION
R135	7030003200	S.RES ERJ3GEYJ 100 V (10)	T	78.8/19
R136	7030003200	S.RES ERJ3GEYJ 100 V (10)	T	84/19
R139	7030003560	S.RES ERJ3GEYJ 103 V (10K)	T	60/47.4
R140	7410000990	S.ARR EXB-V8V 470JV (47)	T	66.2/47.5
R141	7410000990	S.ARR EXB-V8V 470JV (47)	T	62.5/47.5
R142	7410000990	S.ARR EXB-V8V 470JV (47)	T	73.6/47.5
R143	7410000990	S.ARR EXB-V8V 470JV (47)	T	81/47.5
R144	7410000990	S.ARR EXB-V8V 470JV (47)	T	69.9/47.5
R145	7410000990	S.ARR EXB-V8V 470JV (47)	T	77.3/47.5
R146	7030003280	S.RES ERJ3GEYJ 470 V (47)	T	87.2/47.4
R147	7030003280	S.RES ERJ3GEYJ 470 V (47)	T	88.5/47.4
R148	7410000990	S.ARR EXB-V8V 470JV (47)	T	84.7/47.5
R149	7410000990	S.ARR EXB-V8V 470JV (47)	T	87.6/19.5
R150	7410000990	S.ARR EXB-V8V 470JV (47)	T	87.6/23.2
R151	7410000990	S.ARR EXB-V8V 470JV (47)	T	87.6/26.9
R152	7410000990	S.ARR EXB-V8V 470JV (47)	T	87.6/30.6
R153	7030003200	S.RES ERJ3GEYJ 100 V (10)	T	83.1/32.7
R154	7410000990	S.ARR EXB-V8V 470JV (47)	T	83.2/35.2
R155	7410000990	S.ARR EXB-V8V 470JV (47)	T	83.2/38.9
R156	7410000990	S.ARR EXB-V8V 470JV (47)	T	83.2/42.6
R157	7410000800	S.ARR EXB-V8V 103JV (10K)	T	115.8/29.9
R158	7030003560	S.RES ERJ3GEYJ 103 V (10K)	T	115.9/38.6
R159	7030003560	S.RES ERJ3GEYJ 103 V (10K)	T	115.9/32.4
R161	7030003300	S.RES ERJ3GEYJ 680 V (68)	B	101.2/14.4
R164	7030003280	S.RES ERJ3GEYJ 470 V (47)	B	94.3/17
R171	7030003560	S.RES ERJ3GEYJ 103 V (10K)	B	56.6/25.6
R172	7030003560	S.RES ERJ3GEYJ 103 V (10K)	B	56.6/26.8
R173	7030003560	S.RES ERJ3GEYJ 103 V (10K)	B	56.6/28
R174	7030003560	S.RES ERJ3GEYJ 103 V (10K)	T	56.6/31.6
R175	7030003560	S.RES ERJ3GEYJ 103 V (10K)	B	56.6/29.2
R176	7030003560	S.RES ERJ3GEYJ 103 V (10K)	T	53.6/32.8
R177	7030003560	S.RES ERJ3GEYJ 103 V (10K)	T	56.6/32.8
R178	7030003560	S.RES ERJ3GEYJ 103 V (10K)	B	56.6/30.4
R179	7030003560	S.RES ERJ3GEYJ 103 V (10K)	T	53.6/34
R180	7030003560	S.RES ERJ3GEYJ 103 V (10K)	T	56.6/34
R181	7030003560	S.RES ERJ3GEYJ 103 V (10K)	T	53.6/35.2
R182	7030003560	S.RES ERJ3GEYJ 103 V (10K)	B	56.6/31.6
R183	7030003560	S.RES ERJ3GEYJ 103 V (10K)	T	56.6/36.4
R184	7030003560	S.RES ERJ3GEYJ 103 V (10K)	B	56.6/34
R185	7030003560	S.RES ERJ3GEYJ 103 V (10K)	B	56.6/35.2
R186	7030003560	S.RES ERJ3GEYJ 103 V (10K)	T	56.6/35.2
R187	7030003600	S.RES ERJ3GEYJ 223 V (22K)	B	56.6/32.8
R188	7030003560	S.RES ERJ3GEYJ 103 V (10K)	B	56.6/36.4
R189	7030003560	S.RES ERJ3GEYJ 103 V (10K)	T	53.6/42.6
R190	7030003560	S.RES ERJ3GEYJ 103 V (10K)	T	56.6/42.6
R191	7030003560	S.RES ERJ3GEYJ 103 V (10K)	T	56.6/43.8
R201	7030003560	S.RES ERJ3GEYJ 103 V (10K)	T	23.3/71.5
R202	7030003560	S.RES ERJ3GEYJ 103 V (10K)	T	23.3/72.7
R203	7030003560	S.RES ERJ3GEYJ 103 V (10K)	B	32.9/63.3
R204	7030003560	S.RES ERJ3GEYJ 103 V (10K)	B	31.7/63.3
R205	7030003560	S.RES ERJ3GEYJ 103 V (10K)	B	30.5/63.3
R206	7030003560	S.RES ERJ3GEYJ 103 V (10K)	T	26.5/73.9
R207	7030003560	S.RES ERJ3GEYJ 103 V (10K)	B	29.3/63.3
R208	7030003560	S.RES ERJ3GEYJ 103 V (10K)	B	34.1/63.3
R209	7030003560	S.RES ERJ3GEYJ 103 V (10K)	B	28.1/66.3
R210	7030003640	S.RES ERJ3GEYJ 473 V (47K)	T	54.9/73.4
R211	7030003640	S.RES ERJ3GEYJ 473 V (47K)	T	54.9/75.8
R212	7030003640	S.RES ERJ3GEYJ 473 V (47K)	T	54.9/74.6
R213	7030003680	S.RES ERJ3GEYJ 104 V (100K)	T	57.9/78.2
R218	7030003520	S.RES ERJ3GEYJ 472 V (4.7K)	B	30.3/95.7
R219	7030003520	S.RES ERJ3GEYJ 472 V (4.7K)	B	47.3/75.7
R220	7030003520	S.RES ERJ3GEYJ 472 V (4.7K)	B	44/84.5
R221	7030003560	S.RES ERJ3GEYJ 103 V (10K)	T	54.9/82.9
R225	7030003560	S.RES ERJ3GEYJ 103 V (10K)	B	44/79.3
R226	7030003560	S.RES ERJ3GEYJ 103 V (10K)	B	44/78
R227	7030003560	S.RES ERJ3GEYJ 103 V (10K)	B	48.4/65.6
R228	7030003560	S.RES ERJ3GEYJ 103 V (10K)	T	48.4/62.6
R229	7030003560	S.RES ERJ3GEYJ 103 V (10K)	T	49.6/65.6
R230	7030003560	S.RES ERJ3GEYJ 103 V (10K)	T	47.2/62.6
R231	7030003560	S.RES ERJ3GEYJ 103 V (10K)	T	48.4/65.6
R232	7030003560	S.RES ERJ3GEYJ 103 V (10K)	B	44.7/75.7
R233	7030003560	S.RES ERJ3GEYJ 103 V (10K)	B	47.2/65.6
R234	7030003560	S.RES ERJ3GEYJ 103 V (10K)	T	47.2/65.6
R235	7030003560	S.RES ERJ3GEYJ 103 V (10K)	T	46/62.6
R236	7030003560	S.RES ERJ3GEYJ 103 V (10K)	B	46/65.6
R237	7030003560	S.RES ERJ3GEYJ 103 V (10K)	B	43.4/75.7
R238	7030003560	S.RES ERJ3GEYJ 103 V (10K)	T	46/65.6
R239	7030003560	S.RES ERJ3GEYJ 103 V (10K)	T	44.8/62.6
R240	7030003560	S.RES ERJ3GEYJ 103 V (10K)	B	44.8/65.6
R241	7030003560	S.RES ERJ3GEYJ 103 V (10K)	B	42.1/75.7
R242	7030003560	S.RES ERJ3GEYJ 103 V (10K)	T	44.8/65.6
R243	7030003560	S.RES ERJ3GEYJ 103 V (10K)	B	40.8/75.7
R244	7030003560	S.RES ERJ3GEYJ 103 V (10K)	T	51.4/95.7
R245	7030003560	S.RES ERJ3GEYJ 103 V (10K)	T	57.4/95.7
R246	7030003560	S.RES ERJ3GEYJ 103 V (10K)	T	58.6/98.7
R247	7030003560	S.RES ERJ3GEYJ 103 V (10K)	B	41.4/84.5
R248	7030003560	S.RES ERJ3GEYJ 103 V (10K)	T	56.2/95.7
R249	7030003560	S.RES ERJ3GEYJ 103 V (10K)	T	61/95.7
R250	7030003560	S.RES ERJ3GEYJ 103 V (10K)	T	59.8/95.7
R251	7030003560	S.RES ERJ3GEYJ 103 V (10K)	T	57.4/98.7
R252	7030003560	S.RES ERJ3GEYJ 103 V (10K)	T	59.8/98.7
R253	7030003560	S.RES ERJ3GEYJ 103 V (10K)	B	47.6/95.7
R254	7030003560	S.RES ERJ3GEYJ 103 V (10K)	T	58.6/95.7
R255	7030003560	S.RES ERJ3GEYJ 103 V (10K)	T	61/98.7
R256	7030003560	S.RES ERJ3GEYJ 103 V (10K)	B	41.4/81.9
R257	7030003560	S.RES ERJ3GEYJ 103 V (10K)	T	55/95.7
R258	7030003560	S.RES ERJ3GEYJ 103 V (10K)	B	41.4/80.6
R259	7030003560	S.RES ERJ3GEYJ 103 V (10K)	T	55/98.7
R260	7030003560	S.RES ERJ3GEYJ 103 V (10K)	B	41.4/79.3
R261	7030003560	S.RES ERJ3GEYJ 103 V (10K)	T	52.6/98.7
R262	7030003560	S.RES ERJ3GEYJ 103 V (10K)	B	41.4/78
R263	7030003560	S.RES ERJ3GEYJ 103 V (10K)	B	43.5/95.7
R264	7030003560	S.RES ERJ3GEYJ 103 V (10K)	B	41.4/86.4
R265	7030003560	S.RES ERJ3GEYJ 103 V (10K)	T	51.4/98.7

[LOGIC UNIT]

REF NO.	PARTS NO.	DESCRIPTION	M.	H/V LOCATION
R266	7030003560	S.RES ERJ3GEYJ 103 V (10K)	T	53.8/98.7
R267	7030003560	S.RES ERJ3GEYJ 103 V (10K)	T	52.6/95.7
R268	7030003560	S.RES ERJ3GEYJ 103 V (10K)	B	44.7/95.7
R269	7030003560	S.RES ERJ3GEYJ 103 V (10K)	T	53.8/95.7
R270	7030003560	S.RES ERJ3GEYJ 103 V (10K)	T	56.2/98.7
R271	7030003560	S.RES ERJ3GEYJ 103 V (10K)	B	46.4/95.7
R272	7030003560	S.RES ERJ3GEYJ 103 V (10K)	B	32.7/95.7
R273	7030003560	S.RES ERJ3GEYJ 103 V (10K)	T	27.7/98.7
R274	7030003560	S.RES ERJ3GEYJ 103 V (10K)	B	38.2/78
R275	7030003560	S.RES ERJ3GEYJ 103 V (10K)	B	33.9/95.7
R276	7030003560	S.RES ERJ3GEYJ 103 V (10K)	T	27.7/95.7
R277	7030003560	S.RES ERJ3GEYJ 103 V (10K)	B	35.3/95.7
R278	7030003560	S.RES ERJ3GEYJ 103 V (10K)	T	28.9/98.7
R279	7030003560	S.RES ERJ3GEYJ 103 V (10K)	B	38.2/79.3
R280	7030003560	S.RES ERJ3GEYJ 103 V (10K)	B	31.5/95.7
R281	7030003560	S.RES ERJ3GEYJ 103 V (10K)	B	37.5/83.8
R282	7030003560	S.RES ERJ3GEYJ 103 V (10K)	B	38.8/83.8
R283	7030003560	S.RES ERJ3GEYJ 103 V (10K)	T	32.5/98.7
R284	7030003560	S.RES ERJ3GEYJ 103 V (10K)	T	32.5/95.7
R285	7030003560	S.RES ERJ3GEYJ 103 V (10K)	B	38.2/80.6
R286	7030003560	S.RES ERJ3GEYJ 103 V (10K)	T	30.1/98.7
R287	7030003560	S.RES ERJ3GEYJ 103 V (10K)	T	30.1/95.7
R288	7030003560	S.RES ERJ3GEYJ 103 V (10K)	T	31.3/98.7
R289	7030003560	S.RES ERJ3GEYJ 103 V (10K)	T	31.3/95.7
R290	7030003560	S.RES ERJ3GEYJ 103 V (10K)	B	38.2/81.9
R291	7030003560	S.RES ERJ3GEYJ 103 V (10K)	T	28.9/95.7
R292	7030003560	S.RES ERJ3GEYJ 103 V (10K)	B	44/83.2
R293	7030003560	S.RES ERJ3GEYJ 103 V (10K)	B	44/81.9
R294	7030003560	S.RES ERJ3GEYJ 103 V (10K)	B	44/80.6
R295	7030003640	S.RES ERJ3GEYJ 473 V (47K)	B	41.4/83.2
R296	7030003560	S.RES ERJ3GEYJ 103 V (10K)	T	26.5/70.3
R297	7030003560	S.RES ERJ3GEYJ 103 V (10K)	T	26.5/66.7
R298	7030003560	S.RES ERJ3GEYJ 103 V (10K)	B	34.1/66.3
R299	7030003560	S.RES ERJ3GEYJ 103 V (10K)	T	26.5/67.9
R300	7030003560	S.RES ERJ3GEYJ 103 V (10K)	T	23.3/66.7
R301	7030003560	S.RES ERJ3GEYJ 103 V (10K)	B	32.9/66.3
R302	7030003560	S.RES ERJ3GEYJ 103 V (10K)	T	23.3/65.5
R303	7030003560	S.RES ERJ3GEYJ 103 V (10K)	B	31.7/66.3
R304	7030003560	S.RES ERJ3GEYJ 103 V (10K)	T	23.3/67.9
R305	7030003560	S.RES ERJ3GEYJ 103 V (10K)	T	26.5/69.1
R306	7030003560	S.RES ERJ3GEYJ 103 V (10K)	T	26.5/72.7
R307	7030003560	S.RES ERJ3GEYJ 103 V (10K)	T	23.3/70.3
R308	7030003560	S.RES ERJ3GEYJ 103 V (10K)	B	30.5/66.3
R309	7030003560	S.RES ERJ3GEYJ 103 V (10K)	T	23.3/69.1
R310	7030003860	S.RES ERJ3GE JPW V	T	54.9/77
R311	7030003560	S.RES ERJ3GEYJ 103 V (10K)	B	36.5/95.7
R312	7030003860	S.RES ERJ3GE JPW V	T	57.9/77
R315	7030003560	S.RES ERJ3GEYJ 103 V (10K)	T	26.5/65.5
R316	7030003560	S.RES ERJ3GEYJ 103 V (10K)	T	26.5/64.3
R317	7030003560	S.RES ERJ3GEYJ 103 V (10K)	T	23.3/64.3
R318	7030003560	S.RES ERJ3GEYJ 103 V (10K)	B	38.9/95.7
R319	7030003560	S.RES ERJ3GEYJ 103 V (10K)	B	37.7/95.7
R320	7030003560	S.RES ERJ3GEYJ 103 V (10K)	T	26.5/95.7
R322	7030003250	S.RES ERJ3GEYJ 270 V (27)	T	44.9/99.3
R323	7030003250	S.RES ERJ3GEYJ 270 V (27)	T	48.3/99.3
R324	7030003580	S.RES ERJ3GEYJ 153 V (15K)	T	46.1/99.3
R325	7030003580	S.RES ERJ3GEYJ 153 V (15K)	T	49.5/99.3
R330	7030003560	S.RES ERJ3GEYJ 103 V (10K)	T	66.4/100.2
R331	7030003560	S.RES ERJ3GEYJ 103 V (10K)	T	65.1/100.2
R332	7030003640	S.RES ERJ3GEYJ 473 V (47K)	B	87.3/5.4
R333	7030003640	S.RES ERJ3GEYJ 473 V (47K)	B	94.2/8
R334	7030003640	S.RES ERJ3GEYJ 473 V (47K)	T	90.9/8
R335	7030003280	S.RES ERJ3GEYJ 470 V (47)	B	87.3/9.5
R336	7030003640	S.RES ERJ3GEYJ 473 V (47K)	B	73.2/5.4
R337	7030003640	S.RES ERJ3GEYJ 473 V (47K)	B	80.1/8
R338	7030003640	S.RES ERJ3GEYJ 473 V (47K)	T	76.8/8
R339	7030003280	S.RES ERJ3GEYJ 470 V (47)	B	73.2/9.5
R340	7030003280	S.RES ERJ3GEYJ 470 V (47)	B	62.5/9.5
R341	7030003640	S.RES ERJ3GEYJ 473 V (47K)	B	67.9/11.3
R344	7030003520	S.RES ERJ3GEYJ 472 V (4.7K)	B	68.7/2.1
R347	7030003860	S.RES ERJ3GE JPW V	B	42.3/95.7
R348	7030003860	S.RES ERJ3GE JPW V	B	41/95.7
R350	7030003860	S.RES ERJ3GE JPW V	B	29.1/95.7
R351	7030003860	S.RES ERJ3GE JPW V	T	26.5/71.5
R361	7030003580	S.RES ERJ3GEYJ 153 V (15K)	T	42.4/96.6
R362	7030003580	S.RES ERJ3GEYJ 153 V (15K)	T	43.7/96.6
R601	7030003640	S.RES ERJ3GEYJ 473 V (47K)	B	149.4/82.4
R602	7030003640	S.RES ERJ3GEYJ 473 V (47K)	B	150.6/82.4
R606	7030003640	S.RES ERJ3GEYJ 473 V (47K)	B	126.6/64.6
R607	7030003350	S.RES ERJ3GEYJ 181 V (180)	B	126.6/65.8
R608	7030003520	S.RES ERJ3GEYJ 472 V (4.7K)	B	126.5/62.2
R609	7030003440	S.RES ERJ3GEYJ 102 V (1K)	T	132.6/83.1
R610	7030003440	S.RES ERJ3GEYJ 102 V (1K)	T	133.8/83.1
R611	7030003440	S.RES ERJ3GEYJ 102 V (1K)	T	135/83.1
R612	7030003440	S.RES ERJ3GEYJ 102 V (1K)	T	136.2/83.1
R613	7030003440	S.RES ERJ3GEYJ 102 V (1K)	T	137.4/83.1
R614	7030003440	S.RES ERJ3GEYJ 102 V (1K)	T	138.6/83.1
R615	7030003440	S.RES ERJ3GEYJ 102 V (1K)	T	139.8/83.1
R618	7030003800	S.RES ERJ3GEYJ 105 V (1M)	T	139.8/86
R619	7030003800	S.RES ERJ3GEYJ 105 V (1M)	T	138.6/86
R620	7030003800	S.RES ERJ3GEYJ 105 V (1M)	T	137.4/86
R621	7030003800	S.RES ERJ3GEYJ 105 V (1M)	T	136.2/86
R622	7030003800	S.RES ERJ3GEYJ 105 V (1M)	T	135/86
R623	7030003800	S.RES ERJ3GEYJ 105 V (1M)	T	133.8/86
R624	7030003800	S.RES ERJ3GEYJ 105 V (1M)	T	132.6/86
R626	7030003600	S.RES ERJ3GEYJ 223 V (22K)	B	148.2/82.4
R627	7030003640	S.RES ERJ3GEYJ 473 V (47K)	B	153/82.4
R628	7030003640	S.RES ERJ3GEYJ 473 V (47K)	B	151.8/82.4
R629	7030003640	S.RES ERJ3GEYJ 473 V (47K)	B	154.2/82.4
R630	7030003520	S.RES ERJ3GEYJ 472 V (4.7K)	T	116.1/52.4
R631	7030003520	S.RES ERJ3GEYJ 472 V (4.7K)	T	116.1/51.2
R632	7030003520	S.RES ERJ3GEYJ 472 V (4.7K)	T	116.1/50
R633	7030003520	S.RES ERJ3GEYJ 472 V (4.7K)	T	116.1/48.8
R634	7030003520	S.RES ERJ3GEYJ 472 V (4.7K)	T	116.1/47.6

M.=Mounted side (T: Mounted on the Top side, B: Mounted on the Bottom side)
S.=Surface mount

[LOGIC UNIT]

REF NO.	PARTS NO.	DESCRIPTION	M.	H/V LOCATION
R635	7030003520	S.RES ERJ3GEYJ 472 V (4.7K)	T	116.1/46.4
R636	7030003640	S.RES ERJ3GEYJ 473 V (47K)	T	145/87.4
R637	7030003640	S.RES ERJ3GEYJ 473 V (47K)	T	150.7/87.4
R639	7030003640	S.RES ERJ3GEYJ 473 V (47K)	T	151.9/90.7
R640	7030003640	S.RES ERJ3GEYJ 473 V (47K)	T	147.1/97.7
R641	7030003640	S.RES ERJ3GEYJ 473 V (47K)	T	145.9/97.7
R642	7030003640	S.RES ERJ3GEYJ 473 V (47K)	T	144.7/97.7
R643	7030003600	S.RES ERJ3GEYJ 223 V (22K)	B	154.4/67.6
R644	7030003560	S.RES ERJ3GEYJ 103 V (10K)	B	154.4/66.4
R645	7030003520	S.RES ERJ3GEYJ 472 V (4.7K)	B	154.5/54.9
R646	7030003720	S.RES ERJ3GEYJ 224 V (220K)	B	129.2/51.9
R647	7030003720	S.RES ERJ3GEYJ 224 V (220K)	B	131.6/51.9
R648	7030003720	S.RES ERJ3GEYJ 224 V (220K)	B	132.8/51.9
R649	7030003720	S.RES ERJ3GEYJ 224 V (220K)	B	134/51.9
R650	7030003720	S.RES ERJ3GEYJ 224 V (220K)	B	135.2/51.9
R651	7030003720	S.RES ERJ3GEYJ 224 V (220K)	B	136.4/51.9
R652	7030003720	S.RES ERJ3GEYJ 224 V (220K)	B	137.6/51.9
R653	7030003720	S.RES ERJ3GEYJ 224 V (220K)	B	138.8/51.9
R654	7030003520	S.RES ERJ3GEYJ 472 V (4.7K)	B	149.9/52
R655	7030003520	S.RES ERJ3GEYJ 472 V (4.7K)	B	148.7/52
R657	7030003720	S.RES ERJ3GEYJ 224 V (220K)	B	145.8/82.4
R660	7030003640	S.RES ERJ3GEYJ 473 V (47K)	B	155.4/82.4
R661	7030003560	S.RES ERJ3GEYJ 103 V (10K)	T	147.8/81.9
R662	7030003640	S.RES ERJ3GEYJ 473 V (47K)	B	126.6/63.4
R663	7030003640	S.RES ERJ3GEYJ 473 V (47K)	B	131.4/82.4
R664	7030003640	S.RES ERJ3GEYJ 473 V (47K)	B	147/82.4
R665	7030003560	S.RES ERJ3GEYJ 103 V (10K)	B	126.6/75
R666	7030003560	S.RES ERJ3GEYJ 103 V (10K)	B	126.6/73.6
R668	7030003640	S.RES ERJ3GEYJ 473 V (47K)	B	126.6/68.4
R669	7030003640	S.RES ERJ3GEYJ 473 V (47K)	B	139.8/82.4
R670	7030003640	S.RES ERJ3GEYJ 473 V (47K)	B	154.5/53.7
R671	7030003640	S.RES ERJ3GEYJ 473 V (47K)	B	154.5/52.5
R672	7030003640	S.RES ERJ3GEYJ 473 V (47K)	B	126.6/76.2
R674	7030003640	S.RES ERJ3GEYJ 473 V (47K)	B	154.5/58.5
R675	7030003640	S.RES ERJ3GEYJ 473 V (47K)	B	154.5/57.3
R677	7030003640	S.RES ERJ3GEYJ 473 V (47K)	B	126.6/58.6
R679	7030003640	S.RES ERJ3GEYJ 473 V (47K)	B	126.6/61
R681	7030003640	S.RES ERJ3GEYJ 473 V (47K)	B	126.6/59.8
R683	7030003640	S.RES ERJ3GEYJ 473 V (47K)	B	126.6/77.4
R684	7030003640	S.RES ERJ3GEYJ 473 V (47K)	B	154.4/68.8
R685	7030003640	S.RES ERJ3GEYJ 473 V (47K)	B	154.4/70
R687	7030003640	S.RES ERJ3GEYJ 473 V (47K)	B	126.6/72.4
R691	7030003640	S.RES ERJ3GEYJ 473 V (47K)	T	113.6/77.7
R692	7030003520	S.RES ERJ3GEYJ 472 V (4.7K)	B	129.3/24.6
R693	7030003520	S.RES ERJ3GEYJ 472 V (4.7K)	B	130.5/24.6
R694	7030003640	S.RES ERJ3GEYJ 473 V (47K)	B	144.6/82.4
R695	7030003640	S.RES ERJ3GEYJ 473 V (47K)	B	143.4/82.4
R696	7030003520	S.RES ERJ3GEYJ 472 V (4.7K)	B	126.9/24.6
R697	7030003520	S.RES ERJ3GEYJ 472 V (4.7K)	B	131.7/24.6
R698	7030003560	S.RES ERJ3GEYJ 103 V (10K)	B	143.9/52
R699	7030003520	S.RES ERJ3GEYJ 472 V (4.7K)	B	128.1/24.6
R700	7030003720	S.RES ERJ3GEYJ 224 V (220K)	B	142.2/82.4
R701	7030003860	S.RES ERJ3GE JPW V	B	154.5/56.1
R711	7030003670	S.RES ERJ3GEYJ 823 V (82K)	B	154.5/62.1
R712	7030003640	S.RES ERJ3GEYJ 473 V (47K)	B	154.5/60.9
R721	7030003680	S.RES ERJ3GEYJ 104 V (100K)	B	151.4/47.4
R722	7030003680	S.RES ERJ3GEYJ 104 V (100K)	B	150.2/47.4
R723	7030003680	S.RES ERJ3GEYJ 104 V (100K)	B	149/47.4
R724	7030003640	S.RES ERJ3GEYJ 473 V (47K)	B	152.9/41.9
R725	7030003560	S.RES ERJ3GEYJ 103 V (10K)	B	157.1/39.3
R726	7030003590	S.RES ERJ3GEYJ 183 V (18K)	B	157.1/42
R727	7030003570	S.RES ERJ3GEYJ 123 V (12K)	B	152.8/39.3
R731	7030003440	S.RES ERJ3GEYJ 102 V (1K)	B	144.9/39.8
R732	7030003440	S.RES ERJ3GEYJ 102 V (1K)	B	149.4/39.9
R733	7030003640	S.RES ERJ3GEYJ 473 V (47K)	B	144.9/38.6
R734	7030003800	S.RES ERJ3GEYJ 105 V (1M)	B	150.9/38.5
R801	7030003200	S.RES ERJ3GEYJ 100 V (10)	T	106.6/88.4
R802	7030003200	S.RES ERJ3GEYJ 100 V (10)	T	107.1/81.3
R803	7030003200	S.RES ERJ3GEYJ 100 V (10)	T	105.4/88.4
R804	7030003200	S.RES ERJ3GEYJ 100 V (10)	T	105.9/81.3
R805	7030003200	S.RES ERJ3GEYJ 100 V (10)	T	104.2/88.4
R806	7030003200	S.RES ERJ3GEYJ 100 V (10)	T	104.7/81.3
R807	7030003200	S.RES ERJ3GEYJ 100 V (10)	T	103.5/81.3
R808	7030003200	S.RES ERJ3GEYJ 100 V (10)	T	103/88.4
R809	7030003200	S.RES ERJ3GEYJ 100 V (10)	T	102.3/81.3
R810	7030003200	S.RES ERJ3GEYJ 100 V (10)	T	101.8/88.4
R811	7030003200	S.RES ERJ3GEYJ 100 V (10)	T	101.1/81.3
R812	7030003200	S.RES ERJ3GEYJ 100 V (10)	T	100.6/88.4
R813	7030003200	S.RES ERJ3GEYJ 100 V (10)	T	99.4/88.4
R814	7030003200	S.RES ERJ3GEYJ 100 V (10)	T	99.1/81.3
R815	7030003200	S.RES ERJ3GEYJ 100 V (10)	T	98.2/88.4
R816	7030003200	S.RES ERJ3GEYJ 100 V (10)	T	97.9/81.3
R817	7030003200	S.RES ERJ3GEYJ 100 V (10)	T	97/88.4
R818	7030003200	S.RES ERJ3GEYJ 100 V (10)	T	96.7/81.3
R819	7030003200	S.RES ERJ3GEYJ 100 V (10)	T	95.5/81.3
R822	7030003200	S.RES ERJ3GEYJ 100 V (10)	T	93.1/81.3
R823	7030003200	S.RES ERJ3GEYJ 100 V (10)	T	91.9/81.3
R851	7030003530	S.RES ERJ3GEYJ 562 V (5.6K)	T	181.8/97.1
R852	7030003530	S.RES ERJ3GEYJ 562 V (5.6K)	T	181.8/95.9
R853	7030003600	S.RES ERJ3GEYJ 223 V (22K)	T	177.9/95.9
R854	7030003670	S.RES ERJ3GEYJ 823 V (82K)	T	184.4/95.9
R855	7030003680	S.RES ERJ3GEYJ 104 V (100K)	T	175/95.9
R856	7030005451	S.RES ERA3YED 153V (15K)	T	181.8/94.7
R857	7030003560	S.RES ERJ3GEYJ 103 V (10K)	T	186.7/94.2
R858	7030003560	S.RES ERJ3GEYJ 103 V (10K)	T	173.1/94.2
R861	7030003520	S.RES ERJ3GEYJ 472 V (4.7K)	T	187/97.1
R862	7030003520	S.RES ERJ3GEYJ 472 V (4.7K)	T	172.4/97.1
R871	7030003600	S.RES ERJ3GEYJ 223 V (22K)	T	177.5/43.9
R872	7030003590	S.RES ERJ3GEYJ 183 V (18K)	T	181.9/42.1
R873	7030003680	S.RES ERJ3GEYJ 104 V (100K)	T	174.9/43.9
R874	7030003610	S.RES ERJ3GEYJ 273 V (27K)	T	185.8/43.8
R875	7030005451	S.RES ERA3YED 153V (15K)	T	177.5/45.2
R876	7030003560	S.RES ERJ3GEYJ 103 V (10K)	T	173/45.8
R877	7030003560	S.RES ERJ3GEYJ 103 V (10K)	T	183.9/45.1

[LOGIC UNIT]

REF NO.	PARTS NO.	DESCRIPTION	M.	H/V LOCATION
R881	7030003520	S.RES ERJ3GEYJ 472 V (4.7K)	T	173/43.2
R882	7030003520	S.RES ERJ3GEYJ 472 V (4.7K)	T	187.3/42.5
R903	7030003520	S.RES ERJ3GEYJ 472 V (4.7K)	B	147.9/8.6
R904	7030003520	S.RES ERJ3GEYJ 472 V (4.7K)	B	146.8/7.1
R906	7030003550	S.RES ERJ3GEYJ 822 V (8.2K)	B	146/9.4
R908	7030003540	S.RES ERJ3GEYJ 682 V (6.8K)	B	147.9/9.9
R909	7030003520	S.RES ERJ3GEYJ 472 V (4.7K)	B	146.8/11.2
R910	7030003860	S.RES ERJ3GE JPW V	T	132.8/22.8
R911	7030003550	S.RES ERJ3GEYJ 822 V (8.2K)	B	148.4/5.3
R912	7030003550	S.RES ERJ3GEYJ 822 V (8.2K)	B	148.4/2.7
R913	7030003410	S.RES ERJ3GEYJ 561 V (560)	B	136.2/13.3
R914	7030003690	S.RES ERJ3GEYJ 124 V (120K)	B	146/2.7
R915	7030003550	S.RES ERJ3GEYJ 822 V (8.2K)	B	136.2/10.7
R916	7030003520	S.RES ERJ3GEYJ 472 V (4.7K)	B	147.2/5.3
R917	7030003520	S.RES ERJ3GEYJ 472 V (4.7K)	B	146/5.3
R918	7030003520	S.RES ERJ3GEYJ 472 V (4.7K)	B	135/10.7
R919	7030003520	S.RES ERJ3GEYJ 472 V (4.7K)	B	136.2/8.1
R920	7030003860	S.RES ERJ3GE JPW V	B	150.8/5.3
R921	7030003860	S.RES ERJ3GE JPW V	B	135/8.1
R922	7030003560	S.RES ERJ3GEYJ 103 V (10K)	B	132.8/5.5
R923	7030003460	S.RES ERJ3GEYJ 152 V (1.5K)	B	132.8/2.9
R924	7030003470	S.RES ERJ3GEYJ 182 V (1.8K)	B	131.6/4.4
R925	7030003500	S.RES ERJ3GEYJ 332 V (3.3K)	B	130.4/5.5
R926	7030003480	S.RES ERJ3GEYJ 222 V (2.2K)	B	129/2.9
R927	7030003480	S.RES ERJ3GEYJ 222 V (2.2K)	B	135/2.9
R928	7030003480	S.RES ERJ3GEYJ 222 V (2.2K)	B	136.2/5.5
R929	7030003560	S.RES ERJ3GEYJ 103 V (10K)	B	136.2/2.9
R930	7030003380	S.RES ERJ3GEYJ 331 V (330)	T	143.1/13.7
R931	7030003560	S.RES ERJ3GEYJ 103 V (10K)	B	132.8/8.1
R932	7030003460	S.RES ERJ3GEYJ 152 V (1.5K)	B	132.8/10.7
R933	7030003470	S.RES ERJ3GEYJ 182 V (1.8K)	B	131.6/9.2
R934	7030003500	S.RES ERJ3GEYJ 332 V (3.3K)	B	130.4/8.1
R935	7030003480	S.RES ERJ3GEYJ 222 V (2.2K)	B	129/10.7
R936	7030003380	S.RES ERJ3GEYJ 331 V (330)	T	143.9/12.5
R937	7030003410	S.RES ERJ3GEYJ 561 V (560)	B	118/10.5
R938	7030003700	S.RES ERJ3GEYJ 154 V (150K)	B	119.2/10.5
R939	7030003520	S.RES ERJ3GEYJ 472 V (4.7K)	T	143.9/11.3
R940	7030003520	S.RES ERJ3GEYJ 472 V (4.7K)	B	119.2/7.9
R941	7030003410	S.RES ERJ3GEYJ 561 V (560)	B	118/2.7
R942	7030003550	S.RES ERJ3GEYJ 822 V (8.2K)	B	119.2/2.7
R943	7030003520	S.RES ERJ3GEYJ 472 V (4.7K)	T	143.9/10.1
R944	7030003520	S.RES ERJ3GEYJ 472 V (4.7K)	B	119.2/5.3
R945	7030008240	S.RES ERJ12Y0R00U	T	148.4/24.1
R946	7030003320	S.RES ERJ3GEYJ 101 V (100)	T	138/8.8
R947	7030003320	S.RES ERJ3GEYJ 101 V (100)	T	141.2/8.8
R948	7030003320	S.RES ERJ3GEYJ 101 V (100)	T	121.6/8.4
R949	7030003320	S.RES ERJ3GEYJ 101 V (100)	T	124.8/8.4
R953	7030003860	S.RES ERJ3GE JPW V	B	132.1/19
R1001	7030003200	S.RES ERJ3GEYJ 100 V (10)	T	161.9/26.1
R1002	7030003200	S.RES ERJ3GEYJ 100 V (10)	T	165.1/29.4
R1003	7030003200	S.RES ERJ3GEYJ 100 V (10)	T	165.5/26.1
R1004	7030003200	S.RES ERJ3GEYJ 100 V (10)	T	166.5/29.4
R1005	7030003200	S.RES ERJ3GEYJ 100 V (10)	T	166.9/26.1
R1006	7030003200	S.RES ERJ3GEYJ 100 V (10)	T	167.8/29.4
R1007	7030003200	S.RES ERJ3GEYJ 100 V (10)	T	168.3/26.1
R1008	7030003200	S.RES ERJ3GEYJ 100 V (10)	T	169.2/29.4
R1009	7030003440	S.RES ERJ3GEYJ 102 V (1K)	T	169.7/26.1
R1010	7030003200	S.RES ERJ3GEYJ 100 V (10)	T	170.5/29.4
R1011	7030003200	S.RES ERJ3GEYJ 100 V (10)	T	171.1/26.1
R1012	7030003200	S.RES ERJ3GEYJ 100 V (10)	T	171.8/29.4
R1013	7030003200	S.RES ERJ3GEYJ 100 V (10)	T	172.5/26.1
R1014	7030003200	S.RES ERJ3GEYJ 100 V (10)	T	173.1/29.5
R1015	7030003200	S.RES ERJ3GEYJ 100 V (10)	T	173.9/26.5
R1016	7030003200	S.RES ERJ3GEYJ 100 V (10)	T	174.4/29.7
R1017	7030003200	S.RES ERJ3GEYJ 100 V (10)	T	175.3/27
R1018	7030003200	S.RES ERJ3GEYJ 100 V (10)	T	176/30.3
R1019	7030003200	S.RES ERJ3GEYJ 100 V (10)	T	176.7/27.3
R1020	7030003200	S.RES ERJ3GEYJ 100 V (10)	T	177.9/30
R1021	7030003200	S.RES ERJ3GEYJ 100 V (10)	T	178.1/27.4
R1022	7030003200	S.RES ERJ3GEYJ 100 V (10)	T	179.5/26.7
R1023	7030003200	S.RES ERJ3GEYJ 100 V (10)	T	180.5/29.6
R1024	7030003200	S.RES ERJ3GEYJ 100 V (10)	T	180.9/26.4
R1025	7030003200	S.RES ERJ3GEYJ 100 V (10)	T	181.8/29.6
R1026	7030003200	S.RES ERJ3GEYJ 100 V (10)	T	182.3/26.1
R1027	7030003200	S.RES ERJ3GEYJ 100 V (10)	T	183.1/29.6
R1028	7030003200	S.RES ERJ3GEYJ 100 V (10)	T	183.7/26.1
R1029	7030003200	S.RES ERJ3GEYJ 100 V (10)	T	184.4/29.6
R1031	7030003200	S.RES ERJ3GEYJ 100 V (10)	T	188/25
R1032	7030003680	S.RES ERJ3GEYJ 104 V (100K)	T	188.5/28
R1033	7030003670	S.RES ERJ3GEYJ 823 V (82K)	T	190.1/26.2
R1101	7030003200	S.RES ERJ3GEYJ 100 V (10)	T	155.9/8.5
R1102	7030003200	S.RES ERJ3GEYJ 100 V (10)	T	156.2/11.8
R1103	7030003200	S.RES ERJ3GEYJ 100 V (10)	T	157.3/8.5
R1104	7030003200	S.RES ERJ3GEYJ 100 V (10)	T	158/11.8
R1105	7030003200	S.RES ERJ3GEYJ 100 V (10)	T	158.7/8.5
R1106	7030003200	S.RES ERJ3GEYJ 100 V (10)	T	159.4/11.8
R1107	7030003200	S.RES ERJ3GEYJ 100 V (10)	T	160.1/8.5
R1108	7030003200	S.RES ERJ3GEYJ 100 V (10)	T	160.8/11.8
R1109	7030003200	S.RES ERJ3GEYJ 100 V (10)	T	161.5/8.5
R1110	7030003200	S.RES ERJ3GEYJ 100 V (10)	T	162.2/11.8
R1111	7030003200	S.RES ERJ3GEYJ 100 V (10)	T	162.9/8.5
R1112	7030003200	S.RES ERJ3GEYJ 100 V (10)	T	163.6/11.8
R1113	7030003200	S.RES ERJ3GEYJ 100 V (10)	T	164.3/8.5
R1114	7030003200	S.RES ERJ3GEYJ 100 V (10)	T	165/11.8
R1115	7030003200	S.RES ERJ3GEYJ 100 V (10)	T	165.7/8.5
R1116	7030003200	S.RES ERJ3GEYJ 100 V (10)	T	166.4/11.8
R1117	7030003200	S.RES ERJ3GEYJ 100 V (10)	T	167.1/8.5
R1118	7030003440	S.RES ERJ3GEYJ 102 V (1K)	T	162.8/16.1
R1119	7030003200	S.RES ERJ3GEYJ 100 V (10)	T	164/15.6
R1120	7030003200	S.RES ERJ3GEYJ 100 V (10)	T	165.2/16.1
R1121	7030003200	S.RES ERJ3GEYJ 100 V (10)	T	166.4/16.1
R1122	7030003200	S.RES ERJ3GEYJ 100 V (10)	T	167.6/16.1
R1123	7030003200	S.RES ERJ3GEYJ 100 V (10)	T	168.8/15.3
R1124	7030003200	S.RES ERJ3GEYJ 100 V (10)	T	170/16.1

M.=Mounted side (T: Mounted on the Top side, B: Mounted on the Bottom side)
S.=Surface mount

[LOGIC UNIT]

REF NO.	PARTS NO.	DESCRIPTION	M.	H/V LOCATION
R1125	7030003200	S.RES ERJ3GEYJ 100 V (10)	T	171.2/16.1
R1126	7030003200	S.RES ERJ3GEYJ 100 V (10)	T	172.4/16.1
R1127	7030003200	S.RES ERJ3GEYJ 100 V (10)	T	173.6/16.1
R1128	7030003200	S.RES ERJ3GEYJ 100 V (10)	T	174.8/16.1
R1129	7030003200	S.RES ERJ3GEYJ 100 V (10)	T	176/16.1
R1130	7030003200	S.RES ERJ3GEYJ 100 V (10)	T	177.2/16.1
R1131	7030003200	S.RES ERJ3GEYJ 100 V (10)	T	172.8/8.5
R1132	7030003200	S.RES ERJ3GEYJ 100 V (10)	T	173.5/11.8
R1133	7030003200	S.RES ERJ3GEYJ 100 V (10)	T	174.2/8.5
R1134	7030003200	S.RES ERJ3GEYJ 100 V (10)	T	174.9/11.8
R1135	7030003200	S.RES ERJ3GEYJ 100 V (10)	T	175.6/8.5
R1136	7030003200	S.RES ERJ3GEYJ 100 V (10)	T	176.3/11.8
R1137	7030003200	S.RES ERJ3GEYJ 100 V (10)	T	177/8.5
R1138	7030003200	S.RES ERJ3GEYJ 100 V (10)	T	177.7/11.8
R1139	7030003200	S.RES ERJ3GEYJ 100 V (10)	T	178.4/8.5
R1140	7030003200	S.RES ERJ3GEYJ 100 V (10)	T	179.1/11.8
R1141	7030003200	S.RES ERJ3GEYJ 100 V (10)	T	179.8/8.5
R1142	7030003200	S.RES ERJ3GEYJ 100 V (10)	T	180.5/11.8
R1143	7030003200	S.RES ERJ3GEYJ 100 V (10)	T	181.2/8.5
R1144	7030003200	S.RES ERJ3GEYJ 100 V (10)	T	181.9/11.8
R1145	7030003200	S.RES ERJ3GEYJ 100 V (10)	T	182.6/8.5
R1146	7030003200	S.RES ERJ3GEYJ 100 V (10)	T	183.3/11.8
R1147	7030003200	S.RES ERJ3GEYJ 100 V (10)	T	184/8.5
R1148	7030003200	S.RES ERJ3GEYJ 100 V (10)	T	184.7/11.8
C1	4030011600	S.CER C1608 JB 1E 104K-T	T	98.1/55.4
C2	4030011600	S.CER C1608 JB 1E 104K-T	T	101/55.4
C3	4030011600	S.CER C1608 JB 1E 104K-T	T	105.7/55.4
C4	4030011600	S.CER C1608 JB 1E 104K-T	T	108.3/55.4
C5	4030011600	S.CER C1608 JB 1E 104K-T	T	120.2/55.4
C6	4030011600	S.CER C1608 JB 1E 104K-T	T	108.2/69.8
C7	4030011600	S.CER C1608 JB 1E 104K-T	T	103.4/69.8
C8	4030011600	S.CER C1608 JB 1E 104K-T	T	73.5/55.4
C9	4030011600	S.CER C1608 JB 1E 104K-T	T	76.1/55.4
C10	4030011600	S.CER C1608 JB 1E 104K-T	T	80.8/55.4
C11	4030011600	S.CER C1608 JB 1E 104K-T	T	83.4/55.4
C12	4030011600	S.CER C1608 JB 1E 104K-T	T	95.3/55.4
C13	4030011600	S.CER C1608 JB 1E 104K-T	T	83.3/69.8
C14	4030011600	S.CER C1608 JB 1E 104K-T	T	78.5/69.8
C21	4030011600	S.CER C1608 JB 1E 104K-T	T	106.7/49.9
C22	4030011600	S.CER C1608 JB 1E 104K-T	T	104.2/24.3
C23	4030011600	S.CER C1608 JB 1E 104K-T	T	101.2/24.3
C51	4030011600	S.CER C1608 JB 1E 104K-T	B	118.5/77.6
C52	4030011600	S.CER C1608 JB 1E 104K-T	B	121.1/77.6
C53	4030011600	S.CER C1608 JB 1E 104K-T	B	129.3/85.8
C61	4030009990	S.CER C1608 CH 1H 200J-T	T	131.4/45.4
C62	4030011600	S.CER C1608 JB 1E 104K-T	B	63.9/91.8
C63	4030008880	S.CER C1608 JB 1H 223K-T	B	66.1/87.1
C64	4030011600	S.CER C1608 JB 1E 104K-T	B	60.9/90.5
C65	4030011600	S.CER C1608 JB 1E 104K-T	B	57.9/89.8
C66	4550007470	S.TAN F931A107MNMBMA	B	54.4/96.1
C101	4030011600	S.CER C1608 JB 1E 104K-T	B	101.2/17
C102	4030011600	S.CER C1608 JB 1E 104K-T	T	62.6/19
C103	4030011600	S.CER C1608 JB 1E 104K-T	B	67/39.8
C104	4030011600	S.CER C1608 JB 1E 104K-T	T	60.8/50.4
C105	4030011600	S.CER C1608 JB 1E 104K-T	B	74/30.3
C106	4030011600	S.CER C1608 JB 1E 104K-T	B	66.3/26.9
C107	4030011600	S.CER C1608 JB 1E 104K-T	B	67.5/26.9
C108	4030011600	S.CER C1608 JB 1E 104K-T	B	70.4/33.9
C109	4030011600	S.CER C1608 JB 1E 104K-T	B	74.6/26.9
C110	4030011600	S.CER C1608 JB 1E 104K-T	B	67.5/33.7
C111	4030019500	S.CER GRM21BB31A106KE18 (GRM40 B)	T	76.1/16.8
C112	4030011600	S.CER C1608 JB 1E 104K-T	T	77.6/16.4
C113	4030019500	S.CER GRM21BB31A106KE18 (GRM40 B)	T	80.4/17.8
C114	4030011600	S.CER C1608 JB 1E 104K-T	T	78.8/16.4
C115	4030019500	S.CER GRM21BB31A106KE18 (GRM40 B)	T	82.4/17.8
C116	4030011600	S.CER C1608 JB 1E 104K-T	T	84/16.4
C117	4030011600	S.CER C1608 JB 1E 104K-T	B	68.2/39.8
C118	4030011600	S.CER C1608 JB 1E 104K-T	B	66.8/30.3
C119	4030011600	S.CER C1608 JB 1E 104K-T	B	61.7/27.8
C120	4030011600	S.CER C1608 JB 1E 104K-T	B	73.4/33.7
C121	4030011600	S.CER C1608 JB 1E 104K-T	B	74.6/33.7
C122	4030011600	S.CER C1608 JB 1E 104K-T	B	71.7/33.9
C123	4030006860	S.CER C1608 JB 1H 102K-T	B	61.7/32.5
C124	4030011600	S.CER C1608 JB 1E 104K-T	B	66.3/33.7
C125	4030011600	S.CER C1608 JB 1E 104K-T	B	69.1/33.9
C126	4030011600	S.CER C1608 JB 1E 104K-T	B	66.8/31.6
C127	4030011600	S.CER C1608 JB 1E 104K-T	B	73.4/39.8
C128	4030011600	S.CER C1608 JB 1E 104K-T	B	79.9/27.3
C129	4030011600	S.CER C1608 JB 1E 104K-T	B	66.8/29
C130	4030011600	S.CER C1608 JB 1E 104K-T	B	74.6/39.8
C131	4030011600	S.CER C1608 JB 1E 104K-T	B	79.9/32.5
C132	4030011600	S.CER C1608 JB 1E 104K-T	B	79.9/33.7
C133	4030011600	S.CER C1608 JB 1E 104K-T	B	74/31.6
C134	4030011600	S.CER C1608 JB 1E 104K-T	B	64.7/21.5
C135	4030011600	S.CER C1608 JB 1E 104K-T	T	62.6/16
C136	4030011600	S.CER C1608 JB 1E 104K-T	B	73.4/26.9
C137	4030011600	S.CER C1608 JB 1E 104K-T	B	67.3/21.5
C138	4030011600	S.CER C1608 JB 1E 104K-T	B	61.7/35.2
C139	4030011600	S.CER C1608 JB 1E 104K-T	B	79.9/26.1
C140	4030011600	S.CER C1608 JB 1E 104K-T	B	74/29
C141	4030011600	S.CER C1608 JB 1E 104K-T	T	115.9/37.4
C142	4030011600	S.CER C1608 JB 1E 104K-T	T	115.9/39.8
C143	4550007470	S.TAN F931A107MNMBMA	B	84.4/18.1
C201	4030011600	S.CER C1608 JB 1E 104K-T	T	1.7/91.3
C202	4030011600	S.CER C1608 JB 1E 104K-T	T	1.7/88.2
C203	4030011600	S.CER C1608 JB 1E 104K-T	T	1.7/84.9
C204	4030011600	S.CER C1608 JB 1E 104K-T	T	1.7/80.9
C205	4030011600	S.CER C1608 JB 1E 104K-T	T	1.7/69
C206	4030011600	S.CER C1608 JB 1E 104K-T	T	16.1/81

[LOGIC UNIT]

REF NO.	PARTS NO.	DESCRIPTION	M.	H/V LOCATION
C207	4030011600	S.CER C1608 JB 1E 104K-T	T	16.1/85.8
C208	4030011600	S.CER C1608 JB 1E 104K-T	B	19.6/68.1
C209	4030011600	S.CER C1608 JB 1E 104K-T	B	22/80.9
C210	4030011600	S.CER C1608 JB 1E 104K-T	B	22/84.9
C211	4030011600	S.CER C1608 JB 1E 104K-T	B	22/88.2
C212	4030011600	S.CER C1608 JB 1E 104K-T	B	16.2/92.2
C213	4030011600	S.CER C1608 JB 1E 104K-T	B	7.6/85.8
C214	4030011600	S.CER C1608 JB 1E 104K-T	B	7.6/81
C215	4030011600	S.CER C1608 JB 1E 104K-T	B	48.2/69.6
C216	4030011600	S.CER C1608 JB 1E 104K-T	B	49/92.4
C217	4030011600	S.CER C1608 JB 1E 104K-T	B	46.6/79.3
C218	4030011600	S.CER C1608 JB 1E 104K-T	B	46/86.4
C219	4030011600	S.CER C1608 JB 1E 104K-T	B	43.4/86.4
C220	4030011600	S.CER C1608 JB 1E 104K-T	B	47.3/86.4
C221	4030011600	S.CER C1608 JB 1E 104K-T	B	42.4/92.5
C222	4030011600	S.CER C1608 JB 1E 104K-T	B	44.7/69.6
C223	4030011600	S.CER C1608 JB 1E 104K-T	B	50.8/69.6
C224	4030011600	S.CER C1608 JB 1E 104K-T	B	53.1/75.6
C225	4030011600	S.CER C1608 JB 1E 104K-T	B	46.6/81.9
C226	4030011600	S.CER C1608 JB 1E 104K-T	B	46.6/83.2
C227	4030011600	S.CER C1608 JB 1E 104K-T	B	40.1/86.4
C228	4030011600	S.CER C1608 JB 1E 104K-T	B	46.6/84.5
C229	4030011600	S.CER C1608 JB 1E 104K-T	B	37.8/69.6
C230	4030011600	S.CER C1608 JB 1E 104K-T	B	39.5/75.7
C231	4030011600	S.CER C1608 JB 1E 104K-T	B	35.6/75.4
C232	4030011600	S.CER C1608 JB 1E 104K-T	B	46.6/78
C233	4030011600	S.CER C1608 JB 1E 104K-T	B	35.6/80.5
C234	4030011600	S.CER C1608 JB 1E 104K-T	B	38.8/86.4
C235	4030011600	S.CER C1608 JB 1E 104K-T	B	35.5/92.5
C236	4030011600	S.CER C1608 JB 1E 104K-T	B	35.6/76.7
C237	4030011600	S.CER C1608 JB 1E 104K-T	B	35.6/78
C238	4030011600	S.CER C1608 JB 1E 104K-T	B	35.6/79.3
C239	4030011600	S.CER C1608 JB 1E 104K-T	B	53.1/76.8
C240	4030011600	S.CER C1608 JB 1E 104K-T	B	35.6/83.2
C241	4030011600	S.CER C1608 JB 1E 104K-T	B	35.6/84.5
C242	4030011600	S.CER C1608 JB 1E 104K-T	B	35.6/85.7
C243	4030011600	S.CER C1608 JB 1E 104K-T	B	35.6/87
C244	4030011600	S.CER C1608 JB 1E 104K-T	B	46.6/80.6
C245	4030011600	S.CER C1608 JB 1E 104K-T	B	46/75.7
C246	4030011600	S.CER C1608 JB 1E 104K-T	B	35.6/81.9
C247	4030011600	S.CER C1608 JB 1E 104K-T	B	38.2/75.7
C248	4030011600	S.CER C1608 JB 1E 104K-T	B	37.5/86.4
C249	4030011600	S.CER C1608 JB 1E 104K-T	B	44.7/86.4
C250	4030007050	S.CER C1608 CH 1H 220J-T	T	37.8/67
C251	4030007050	S.CER C1608 CH 1H 220J-T	T	40.4/67
C252	4030006990	S.CER C1608 CH 1H 080D-T	T	36.6/95
C253	4030006990	S.CER C1608 CH 1H 080D-T	T	39.2/95
C254	4030006900	S.CER C1608 JB 1H 103K-T	T	52/65.6
C255	4510008520	S.ELE EEE1CA470SP	T	57.1/68.5
C256	4030006900	S.CER C1608 JB 1H 103K-T	T	60.1/89
C257	4510007130	S.ELE EEFCD 0J 470R	T	58.1/86
C258	4030011600	S.CER C1608 JB 1E 104K-T	B	39.8/92.5
C259	4030011600	S.CER C1608 JB 1E 104K-T	B	52.5/80.9
C276	4030007050	S.CER C1608 CH 1H 220J-T	T	45.7/97.5
C277	4030007050	S.CER C1608 CH 1H 220J-T	T	49/97.5
C278	4510008500	S.ELE EEE1CA101WP	T	66.7/83
C283	4510008550	S.ELE EEE1HA010SR	T	65.5/89
C284	4030011600	S.CER C1608 JB 1E 104K-T	B	94.2/5.4
C285	4510008540	S.ELE EEE1CA100SR	T	96.5/3.7
C286	4510008540	S.ELE EEE1CA100SR	T	91.7/3.7
C287	4030011600	S.CER C1608 JB 1E 104K-T	B	88.8/2.1
C288	4510008540	S.ELE EEE1CA100SR	T	86.9/3.7
C289	4030011600	S.CER C1608 JB 1E 104K-T	B	91.4/2.1
C290	4030011600	S.CER C1608 JB 1E 104K-T	B	80.1/5.4
C291	4510008540	S.ELE EEE1CA100SR	T	82.1/3.7
C292	4510008540	S.ELE EEE1CA100SR	T	77.3/3.7
C293	4030011600	S.CER C1608 JB 1E 104K-T	B	77.3/2.1
C294	4510008540	S.ELE EEE1CA100SR	T	72.5/3.7
C295	4030011600	S.CER C1608 JB 1E 104K-T	B	74.7/2.1
C296	4030011600	S.CER C1608 JB 1E 104K-T	B	62.5/5.4
C297	4510008540	S.ELE EEE1CA100SR	T	62.9/3.7
C298	4030011600	S.CER C1608 JB 1E 104K-T	B	65.7/2.1
C299	4510008540	S.ELE EEE1CA100SR	T	67.7/3.7
C361	4030007050	S.CER C1608 CH 1H 220J-T	T	42.4/99.3
C362	4030007050	S.CER C1608 CH 1H 220J-T	T	43.7/99.3
C603	4030011600	S.CER C1608 JB 1E 104K-T	B	126.6/71
C604	4030011600	S.CER C1608 JB 1E 104K-T	B	126.6/69.8
C605	4030011600	S.CER C1608 JB 1E 104K-T	B	128/51.9
C606	4030011600	S.CER C1608 JB 1E 104K-T	B	154.5/73.6
C607	4030011600	S.CER C1608 JB 1E 104K-T	B	147.5/52
C608	4510008540	S.ELE EEE1CA100SR	T	131/74.8
C609	4510008540	S.ELE EEE1CA100SR	T	135.8/74.8
C610	4030006900	S.CER C1608 JB 1H 103K-T	T	130.9/78.3
C611	4030006900	S.CER C1608 JB 1H 103K-T	T	136.8/78.3
C612	4030007010	S.CER C1608 CH 1H 100D-T	T	129.9/68.9
C613	4030007010	S.CER C1608 CH 1H 100D-T	T	129.9/66.3
C614	4030011600	S.CER C1608 JB 1E 104K-T	B	126.6/67
C616	4030006900	S.CER C1608 JB 1H 103K-T	B	141/82.7
C617	4030006900	S.CER C1608 JB 1H 103K-T	B	138.6/82.7
C618	4030006900	S.CER C1608 JB 1H 103K-T	B	137.4/82.7
C619	4030006900	S.CER C1608 JB 1H 103K-T	B	136.2/82.7
C620	4030006900	S.CER C1608 JB 1H 103K-T	B	135/82.7
C621	4030006900	S.CER C1608 JB 1H 103K-T	B	133.8/82.7
C622	4030006900	S.CER C1608 JB 1H 103K-T	B	132.6/82.7
C626	4030011600	S.CER C1608 JB 1E 104K-T	T	146.2/87.4
C627	4030011600	S.CER C1608 JB 1E 104K-T	T	151.9/85.9
C628	4030011600	S.CER C1608 JB 1E 104K-T	T	113.6/72.6
C629	4030011600	S.CER C1608 JB 1E 104K-T	T	150.2/67.1
C630	4030011600	S.CER C1608 JB 1E 104K-T	B	122.4/32
C631	4030011600	S.CER C1608 JB 1E 104K-T	B	125.7/24.6
C632	4030011600	S.CER C1608 JB 1E 104K-T	B	132.9/24.6
C633	4030011600	S.CER C1608 JB 1E 104K-T	B	141.4/40.5
C634	4030011600	S.CER C1608 JB 1E 104K-T	B	141.4/37.5
C635	4030011600	S.CER C1608 JB 1E 104K-T	B	134.4/44.7

M.=Mounted side (T: Mounted on the Top side, B: Mounted on the Bottom side)
S.=Surface mount

[LOGIC UNIT]

REF NO.	PARTS NO.	DESCRIPTION	M.	H/V LOCATION
C636	4030011600	S.CER C1608 JB 1E 104K-T	B	125.2/46.1
C656	4030011600	S.CER C1608 JB 1E 104K-T	B	145.1/52
C661	4030011600	S.CER C1608 JB 1E 104K-T	T	149.7/77.5
C698	4510008540	S.ELE EEE1CA100SR	T	144/54.4
C711	4030006900	S.CER C1608 JB 1H 103K-T	B	154.5/59.7
C721	4030011600	S.CER C1608 JB 1E 104K-T	B	152.9/44.5
C731	4030006900	S.CER C1608 JB 1H 103K-T	B	147.8/38.6
C732	4030006900	S.CER C1608 JB 1H 103K-T	B	144.9/41
C801	4030006860	S.CER C1608 JB 1H 102K-T	B	83.3/88.1
C802	4030006860	S.CER C1608 JB 1H 102K-T	B	80.6/88.3
C803	4030006860	S.CER C1608 JB 1H 102K-T	T	82.2/76.8
C804	4030006860	S.CER C1608 JB 1H 102K-T	T	79.8/76.8
C805	4030006860	S.CER C1608 JB 1H 102K-T	T	78.4/76.9
C806	4030006860	S.CER C1608 JB 1H 102K-T	T	76.9/76.9
C807	4030006860	S.CER C1608 JB 1H 102K-T	T	75.6/78
C808	4030006860	S.CER C1608 JB 1H 102K-T	B	75.8/88.3
C809	4030006860	S.CER C1608 JB 1H 102K-T	B	72.7/88.3
C810	4030019500	S.CER GRM21BB31A106KE18 (GRM40 B)	B	67.4/95.1
C811	4030019500	S.CER GRM21BB31A106KE18 (GRM40 B)	B	152.5/28.9
C812	4030019500	S.CER GRM21BB31A106KE18 (GRM40 B)	T	65.7/9
C851	4030007070	S.CER C1608 CH 1H 330J-T	T	184.4/97.1
C852	4030007070	S.CER C1608 CH 1H 330J-T	T	175/97.1
C853	4030008650	S.CER C1608 JB 1H 332K-T	T	184.8/94.7
C854	4030008650	S.CER C1608 JB 1H 332K-T	T	175/94.7
C855	4030007130	S.CER C1608 CH 1H 101J-T	T	184.8/93.4
C856	4030007130	S.CER C1608 CH 1H 101J-T	T	175/93.4
C857	4030011600	S.CER C1608 JB 1E 104K-T	T	181.8/93.4
C858	4030011600	S.CER C1608 JB 1E 104K-T	T	178/94.5
C859	4030011600	S.CER C1608 JB 1E 104K-T	T	184.7/82.7
C860	4030011600	S.CER C1608 JB 1E 104K-T	T	174.3/82.7
C861	4030011600	S.CER C1608 JB 1E 104K-T	T	181.3/82.8
C862	4550007900	S.TAN F931E476MNC	T	178.9/74.8
C863	4030018970	S.CER C3225 JB 1C 226MT-N	T	177.1/80.6
C864	4030019500	S.CER GRM21BB31A106KE18 (GRM40 B)	T	169.7/94.1
C865	4030019500	S.CER GRM21BB31A106KE18 (GRM40 B)	T	190/94.4
C866	4030019500	S.CER GRM21BB31A106KE18 (GRM40 B)	T	197.7/96.2
C867	4030019500	S.CER GRM21BB31A106KE18 (GRM40 B)	T	161.9/96.9
C868	4030019500	S.CER GRM21BB31A106KE18 (GRM40 B)	T	197.7/98
C869	4030019500	S.CER GRM21BB31A106KE18 (GRM40 B)	T	188.2/94.4
C870	4030019500	S.CER GRM21BB31A106KE18 (GRM40 B)	T	171.5/94.1
C871	4030007070	S.CER C1608 CH 1H 330J-T	T	174.9/42.6
C872	4030007070	S.CER C1608 CH 1H 330J-T	T	184.7/42.5
C873	4030008650	S.CER C1608 JB 1H 332K-T	T	174.9/45.2
C874	4030008650	S.CER C1608 JB 1H 332K-T	T	182.1/43.4
C875	4030007130	S.CER C1608 CH 1H 101J-T	T	174.9/46.5
C876	4030007130	S.CER C1608 CH 1H 101J-T	T	182.1/44.7
C877	4030011600	S.CER C1608 JB 1E 104K-T	T	178.1/46.5
C878	4030011600	S.CER C1608 JB 1E 104K-T	T	180.7/46
C879	4030011600	S.CER C1608 JB 1E 104K-T	T	174.9/57.7
C880	4030011600	S.CER C1608 JB 1E 104K-T	T	185.3/57.7
C881	4030011600	S.CER C1608 JB 1E 104K-T	T	178.7/57.7
C882	4550007900	S.TAN F931E476MNC	T	179.4/66
C883	4030018970	S.CER C3225 JB 1C 226MT-N	T	182.6/59.9
C884	4030019500	S.CER GRM21BB31A106KE18 (GRM40 B)	T	187.2/46
C885	4030019500	S.CER GRM21BB31A106KE18 (GRM40 B)	T	169.5/46.2
C886	4030019500	S.CER GRM21BB31A106KE18 (GRM40 B)	T	161.2/45
C887	4030019500	S.CER GRM21BB31A106KE18 (GRM40 B)	T	195.3/41.4
C888	4030019500	S.CER GRM21BB31A106KE18 (GRM40 B)	T	161.9/95.1
C889	4030019500	S.CER GRM21BB31A106KE18 (GRM40 B)	T	161.2/43.2
C890	4030019500	S.CER GRM21BB31A106KE18 (GRM40 B)	T	171.3/46.2
C891	4030019500	S.CER GRM21BB31A106KE18 (GRM40 B)	T	185.5/46
C892	4030019500	S.CER GRM21BB31A106KE18 (GRM40 B)	T	195.3/43.1
C893	4030018970	S.CER C3225 JB 1C 226MT-N	T	181.7/80.6
C894	4030018970	S.CER C3225 JB 1C 226MT-N	T	177.6/59.9
C895	4030019500	S.CER GRM21BB31A106KE18 (GRM40 B)	T	189/46
C896	4030019500	S.CER GRM21BB31A106KE18 (GRM40 B)	T	190.7/46
C897	4030019500	S.CER GRM21BB31A106KE18 (GRM40 B)	T	167.9/91.7
C898	4030019500	S.CER GRM21BB31A106KE18 (GRM40 B)	T	167.9/89.9
C904	4030019320	S.CER C1608 X7R 1C 105K-T	B	149.4/11.2
C906	4030009880	S.CER C1608 JB 1H 682K-T	B	149.6/2.7
C907	4510008540	S.ELE EEE1CA100SR	T	124.9/13.5
C908	4030008880	S.CER C1608 JB 1H 223K-T	B	150.8/2.7
C909	4030007160	S.CER C1608 CH 1H 181J-T	B	147.2/2.7
C910	4510008540	S.ELE EEE1CA100SR	T	131/2.6
C911	4030009490	S.CER C1608 JB 1H 821K-T	B	129/5.5
C912	4030009490	S.CER C1608 JB 1H 821K-T	B	130.4/2.9
C913	4510008540	S.ELE EEE1CA100SR	T	131/7.4
C914	4030009490	S.CER C1608 JB 1H 821K-T	B	129/8.1
C915	4030009490	S.CER C1608 JB 1H 821K-T	B	130.4/10.7
C916	4510008540	S.ELE EEE1CA100SR	T	105.5/7.4
C917	4510008540	S.ELE EEE1CA100SR	T	105.5/2.6

[LOGIC UNIT]

REF NO.	PARTS NO.	DESCRIPTION	M.	H/V LOCATION
C918	4030011600	S.CER C1608 JB 1E 104K-T	T	138/7.6
C919	4030011600	S.CER C1608 JB 1E 104K-T	T	141.2/7.6
C920	4510008540	S.ELE EEE1CA100SR	T	137.2/4.1
C921	4510008540	S.ELE EEE1CA100SR	T	142/4.1
C922	4030011600	S.CER C1608 JB 1E 104K-T	T	121.6/7.2
C923	4030011600	S.CER C1608 JB 1E 104K-T	T	124.8/7.2
C924	4510008540	S.ELE EEE1CA100SR	T	120.8/3.7
C925	4510008540	S.ELE EEE1CA100SR	T	125.6/3.7
C1002	4030006860	S.CER C1608 JB 1H 102K-T	B	159.3/26.1
C1003	4030006860	S.CER C1608 JB 1H 102K-T	B	156.7/26.1
C1004	4030006860	S.CER C1608 JB 1H 102K-T	B	158/26.1
C1005	4030006860	S.CER C1608 JB 1H 102K-T	B	160.6/26.1
C1006	4030006860	S.CER C1608 JB 1H 102K-T	B	161.9/26.1
C1007	4030006860	S.CER C1608 JB 1H 102K-T	B	155.4/26.1
C1008	4030006860	S.CER C1608 JB 1H 102K-T	B	186.5/34.8
C1009	4030006860	S.CER C1608 JB 1H 102K-T	B	180.5/29.6
C1010	4030006860	S.CER C1608 JB 1H 102K-T	B	179.5/26.1
C1011	4030006860	S.CER C1608 JB 1H 102K-T	B	178.2/30
C1012	4030006860	S.CER C1608 JB 1H 102K-T	B	175.3/26.1
C1013	4030006860	S.CER C1608 JB 1H 102K-T	B	174.4/29.7
C1014	4030006860	S.CER C1608 JB 1H 102K-T	B	173.9/26.1
C1015	4030006860	S.CER C1608 JB 1H 102K-T	B	173.1/29.5
C1016	4030006860	S.CER C1608 JB 1H 102K-T	B	172.5/26.1
C1017	4030006860	S.CER C1608 JB 1H 102K-T	B	171.1/26.1
C1018	4030006860	S.CER C1608 JB 1H 102K-T	B	170.4/29.4
C1019	4030006860	S.CER C1608 JB 1H 102K-T	B	169.7/26.1
C1020	4030006860	S.CER C1608 JB 1H 102K-T	B	169/29.4
C1021	4030006860	S.CER C1608 JB 1H 102K-T	B	168.3/26.1
C1022	4030006860	S.CER C1608 JB 1H 102K-T	B	167.6/29.4
C1023	4030006860	S.CER C1608 JB 1H 102K-T	B	166.9/26.1
C1024	4030006860	S.CER C1608 JB 1H 102K-T	B	166.2/29.4
C1025	4030006860	S.CER C1608 JB 1H 102K-T	B	165.5/26.1
C1026	4030006860	S.CER C1608 JB 1H 102K-T	B	164/30.6
C1027	4030006860	S.CER C1608 JB 1H 102K-T	B	153.6/30.5
C1031	4030006900	S.CER C1608 JB 1H 103K-T	T	191.4/26.2
C1101	4030006860	S.CER C1608 JB 1H 102K-T	B	179.1/11.8
C1102	4030006860	S.CER C1608 JB 1H 102K-T	B	178.4/8.5
C1103	4030006860	S.CER C1608 JB 1H 102K-T	B	177.7/11.8
C1104	4030006860	S.CER C1608 JB 1H 102K-T	B	176.3/11.8
C1105	4030006860	S.CER C1608 JB 1H 102K-T	B	177.2/16.1
C1106	4030006860	S.CER C1608 JB 1H 102K-T	B	176/16.1
C1107	4030006860	S.CER C1608 JB 1H 102K-T	B	174.8/16.1
C1108	4030006860	S.CER C1608 JB 1H 102K-T	B	173.6/16.1
C1109	4030006860	S.CER C1608 JB 1H 102K-T	B	172.4/16.1
C1110	4030006860	S.CER C1608 JB 1H 102K-T	B	171.2/16.1
C1111	4030006860	S.CER C1608 JB 1H 102K-T	B	170/16.1
C1112	4030006860	S.CER C1608 JB 1H 102K-T	B	168.8/15.3
C1113	4030006860	S.CER C1608 JB 1H 102K-T	B	167.6/16.1
C1114	4030006860	S.CER C1608 JB 1H 102K-T	B	166.4/16.1
C1115	4030006860	S.CER C1608 JB 1H 102K-T	B	162.8/16.1
C1116	4030006860	S.CER C1608 JB 1H 102K-T	B	167.1/8.5
C1117	4030006860	S.CER C1608 JB 1H 102K-T	B	166.4/11.8
C1118	4030006860	S.CER C1608 JB 1H 102K-T	B	165.7/8.5
C1119	4030006860	S.CER C1608 JB 1H 102K-T	B	165/11.8
C1120	4030006860	S.CER C1608 JB 1H 102K-T	B	162.9/8.5
C1121	4030006860	S.CER C1608 JB 1H 102K-T	B	162.2/11.8
C1122	4030006860	S.CER C1608 JB 1H 102K-T	B	161.5/8.5
C1123	4030006860	S.CER C1608 JB 1H 102K-T	B	160.1/8.5
C1124	4030006860	S.CER C1608 JB 1H 102K-T	B	159.4/11.8
C1125	4030006860	S.CER C1608 JB 1H 102K-T	B	158.7/8.5
C1126	4030006860	S.CER C1608 JB 1H 102K-T	B	158/11.8
J801	6510021722	S.CON 30FLT-SM2-TB(LF)(SN)(M)	T	99.9/85
J802	6510021722	S.CON 30FLT-SM2-TB(LF)(SN)(M)	T	80/85
J901	6510018921	S.CON B8B-PH-SM4-TB(LF)(SN)	T	150.9/11.5
J1001	6510024151	S.CON 50FY-BMT-TB(LF)(SN)	T	170.2/21.3
J1002	6510022191	S.CON B3B-PH-SM4-TB(LF)(SN)	T	192.5/19.1
J1101	6510024151	S.CON 50FY-BMT-TB(LF)(SN)	T	170.2/3.6
S51	2260002740	S.SWI LS8J2M-T	T	73.1/75.9
W605	7120000470	JUM ERDS2T0		
EP203	6910012350	S.BEA MMZ1608Y 102BT	T	50.8/65.6
EP204	6910012350	S.BEA MMZ1608Y 102BT	T	57.5/89
EP801	6910014730	S.BEA MPZ2012S331A-T	T	82.1/88.8
EP802	6910014690	S.BEA MPZ1608S221A-T	T	80.5/88.4
EP803	6910014730	S.BEA MPZ2012S331A-T	T	81.7/80.7
EP804	6910014730	S.BEA MPZ2012S331A-T	T	79.9/80.7
EP805	6910014690	S.BEA MPZ1608S221A-T	T	78.4/80.8
EP806	6910014730	S.BEA MPZ2012S331A-T	T	76.8/80.8
EP807	6910012350	S.BEA MMZ1608Y 102BT	T	75.3/81.1
EP808	6910012350	S.BEA MMZ1608Y 102BT	T	75.8/88.4
EP809	6910012350	S.BEA MMZ1608Y 102BT	T	74/81.1
EP810	6910012350	S.BEA MMZ1608Y 102BT	T	73.9/88.4
EP811	6910012350	S.BEA MMZ1608Y 102BT	T	72.7/88.4
EP814	6910014730	S.BEA MPZ2012S331A-T	B	64.2/93.8
EP851	6910014730	S.BEA MPZ2012S331A-T	T	166.8/95.1
EP852	6910014730	S.BEA MPZ2012S331A-T	T	194.6/96.7
EP853	6910014730	S.BEA MPZ2012S331A-T	T	165.2/96.9
EP854	6910014730	S.BEA MPZ2012S331A-T	T	192.1/97.8
EP871	6910014730	S.BEA MPZ2012S331A-T	T	192.8/42.6
EP872	6910014730	S.BEA MPZ2012S331A-T	T	163.6/46
EP873	6910014730	S.BEA MPZ2012S331A-T	T	190.2/41.5
EP874	6910014730	S.BEA MPZ2012S331A-T	T	165.4/44.4
EP1001	6910014640	S.BEA MPZ2012S221A-T	B	188/24.7
EP1002	6910014690	S.BEA MPZ1608S221A-T	T	155.4/26.1
EP1003	6910014690	S.BEA MPZ1608S221A-T	T	156.7/26.1
EP1004	6910014690	S.BEA MPZ1608S221A-T	T	158/26.1
EP1005	6910014690	S.BEA MPZ1608S221A-T	T	159.3/26.1

M.=Mounted side (T: Mounted on the Top side, B: Mounted on the Bottom side)
S.=Surface mount

[LOGIC UNIT]

REF NO.	PARTS NO.	DESCRIPTION		M.	H/V LOCATION
EP1006	6910014690	S.BEA	MPZ1608S221A-T	T	160.6/26.1
EP1007	6910014690	S.BEA	MPZ1608S221A-T	T	163.1/26.1
EP1008	6910014690	S.BEA	MPZ1608S221A-T	T	179.1/29.9
EP1009	6910014690	S.BEA	MPZ1608S221A-T	T	185.1/26.1

[MAIN UNIT]

REF NO.	PARTS NO.	DESCRIPTION		M.	H/V LOCATION
IC1201	1110003870	S.IC	NJM2058M-TE1-#ZZZB	B	43.2/129.3
IC1301	1110003870	S.IC	NJM2058M-TE1-#ZZZB	B	18.8/131.1
IC1401	1130011530	S.IC	CD74HC4094M96	B	54.9/96.2
IC1402	1130011530	S.IC	CD74HC4094M96	B	54.9/108.1
IC1403	1130012000	S.IC	M62352AGP C60Q	T	58.6/95
IC1404	1120002830	S.IC	NJM2125F-TE1-#FZZB	T	168.4/132.6
IC2001	1110003870	S.IC	NJM2058M-TE1-#ZZZB	B	174.6/75.2
IC2101	1190002261	S.IC	USB2502-AEZG	T	162.7/34.5
IC2102	1130013010	S.IC	SN74AHC1G08DCK3	T	162.3/40.3
IC2103	1180003480	S.REG	NJU7772F33-TE1-#ZZZB	T	176/33.9
IC2104	1180003480	S.REG	NJU7772F33-TE1-#ZZZB	T	176.4/27.9
IC2121	1190002730	S.IC	CP2102-GMR <MAC>	T	177.2/41.5
IC2131	1130007021	S.IC	TC7S66FU(TE85L,F)	T	174.4/58.6
IC2132	1190002240	S.IC	PCM2901E/2K	T	160.5/53.1
IC2201	1130005252	S.IC	TC74HC08AF(EL,F)	B	182/47.7
IC2202	1130005721	S.IC	TC7W04F(TE12L,F)	B	184.1/39.6
IC2301	1110003870	S.IC	NJM2058M-TE1-#ZZZB	B	97.7/18.9
IC2312	1110003091	IC	LA4425A-E		
IC2331	1110006300	S.IC	NJM2172V-TE1-#ZZZB	T	92.6/10.2
IC2362	1120002830	S.IC	NJM2125F-TE1-#FZZB	T	100.6/19.3
IC2601	1110006300	S.IC	NJM2172V-TE1-#ZZZB	T	11.6/63.4
IC3001	1130012900	S.IC	TC74LCX00FT (EL)	T	144.2/38.8
IC3002	1130013110	S.IC	KIC7W53FK-RTK/P	T	89/22.1
IC3201	1110007390	S.IC	NJM2114M-TE1-#ZZZB	B	124/41.4
IC3202	1110006190	S.IC	NJM074M-TE1-#ZZZB	B	124/51.6
IC3203	1110007390	S.IC	NJM2114M-TE1-#ZZZB	B	124/61.2
IC3301	1110005100	S.IC	NJM072BM-TE1-#ZZZB	B	129.8/30.7
IC3303	1110007390	S.IC	NJM2114M-TE1-#ZZZB	B	121.2/30.7
IC3401	1110007390	S.IC	NJM2114M-TE1-#ZZZB	B	104.1/35.1
IC3402	1110005461	S.IC	TA4107F(TE12L,F)	T	108.3/48.8
IC3501	1130013110	S.IC	KIC7W53FK-RTK/P	T	107.8/59.6
IC3502	1130013110	S.IC	KIC7W53FK-RTK/P	T	109.4/76.3
IC3651	1180003210	S.REG	NJM2831F10	T	167.8/80.1
IC3715	1110006420	S.IC	UPC2708TB-E3-A	T	144/101.5
IC4001	1110007390	S.IC	NJM2114M-TE1-#ZZZB	B	79.3/21.6
IC4002	1110007390	S.IC	NJM2114M-TE1-#ZZZB	B	79.2/12.2
IC4003	1180003490	S.REG	NJM2871BF04-TE1-#ZZZB	T	63.8/9.1
IC4004	1190002920	S.IC	PCM4220PFB	T	65.9/19.5
IC4005	1130013440	S.IC	SN74LVC2G74DCTR	T	58.4/12.9
IC4101	1130005971	S.IC	TC74HC4053AF(F) S	B	90.8/71.4
IC4201	1110007390	S.IC	NJM2114M-TE1-#ZZZB	B	78.3/52.8
IC4202	1110007390	S.IC	NJM2114M-TE1-#ZZZB	B	71.1/44.9
IC4204	1110007390	S.IC	NJM2114M-TE1-#ZZZB	B	80/44.9
IC4205	1110001901	S.IC	UPC4570G2-E1-A	B	79.4/73.4
IC4301	1190002650	S.IC	AK4620BVFP-E2/P	T	67.3/37.7
IC4302	1110004770	S.IC	BU9480F-E2	B	78.1/62.7
IC4401	1110007390	S.IC	NJM2114M-TE1-#ZZZB	B	79.3/31.5
IC4402	1110003870	S.IC	NJM2058M-TE1-#ZZZB	B	91.2/59.9
IC4501	1130015150	S.IC	CY22381FXC(SX-3073G)	B	66.4/89.1
IC4502	1130011930	S.IC	SN74LVC1G04DCKR	T	67.3/86.7
IC5001	1140014800	S.IC	TMS320C6726BRFP266	T	41.5/23.4
IC5002	1130015210	S.IC	EN29LV040A-70SCP(SX-3073C)	T	17.4/23.1
IC5101	1140014320	S.IC	TMS320C6720BRFP200	T	50.8/62.9
IC5102	1130015220	S.IC	EN29LV040A-70SCP(SX-3073D)	T	26.7/62.7
IC6001	1120002830	S.IC	NJM2125F-TE1-#FZZB	T	151.2/113.4
IC6002	1180000720	S.IC	AN79L05M-(E1)	B	110.4/90.9
IC6003	1190002880	S.IC	AD9834CRUZ-REEL7 <FE>	T	80.6/128
IC6004	1190002890	S.IC	ADF4360-8BCPZRL7 <FE>	T	79.7/106
IC6005	1110006131	S.IC	UPC4094G2-E1-A	B	104.6/81
IC6006	1110006131	S.IC	UPC4094G2-E1-A	B	96.1/81
IC6007	1190002900	S.IC	ADS7886SDCKR	T	84/76
IC6008	1130013440	S.IC	SN74LVC2G74DCTR	T	92.3/107.7
IC6009	1110006131	S.IC	UPC4094G2-E1-A	B	88.7/81
IC6010	1130011930	S.IC	SN74LVC1G04DCKR	T	71.5/106.9
IC6020	1130011930	S.IC	SN74LVC1G04DCKR	T	92.3/112.3
Q1101	1540000550	S.TRA	2SD1664 T100Q	B	4.6/92.4
Q1102	1530003900	S.TRA	KTC4075 BL-RTK/P	T	7.9/96.5
Q1103	1540000550	S.TRA	2SD1664 T100Q	B	4.6/99.1
Q1111	1540000550	S.TRA	2SD1664 T100Q	B	4.6/106.7
Q1112	1530003900	S.TRA	KTC4075 BL-RTK/P	T	7.9/104.1
Q1201	1560001260	S.FET	2SK3018 T106	T	42.9/125.7
Q1202	1590003780	S.TRA	KRA304E-RTK/P	T	45.2/126
Q1241	1590003770	S.TRA	KRA302E-RTK/P	T	36.3/123
Q1242	1530003960	S.TRA	KTC2875-B-RTK/P	T	39.1/123
Q1243	1510000510	S.TRA	2SA1576A T106R	B	20.9/120.8
Q1251	1530003960	S.TRA	KTC2875-B-RTK/P	T	43.3/119.7
Q1252	1590003770	S.TRA	KRA302E-RTK/P	T	47.5/119.1
Q1253	1590003790	S.TRA	KRC404E RTK/P	T	59/120.2
Q1254	1560001260	S.FET	2SK3018 T106	T	59.1/110.5
Q1255	1530003900	S.TRA	KTC4075 BL-RTK/P	T	56.1/110.6
Q1256	1590003680	S.TRA	KRC402 RTK/P	T	59.3/126.5
Q1257	1590003680	S.TRA	KRC402 RTK/P	T	59.3/135.6
Q1401	1530003900	S.TRA	KTC4075 BL-RTK/P	T	57.2/101.7
Q2001	1590003680	S.TRA	KRC402 RTK/P	T	166.9/145.3
Q2031	1530003900	S.TRA	KTC4075 BL-RTK/P	T	172.1/148.3
Q2041	1540000451	S.TRA	2SD1623T-TD-E	B	187.3/146
Q2042	1530003900	S.TRA	KTC4075 BL-RTK/P	T	179.8/145.3
Q2043	1590003770	S.TRA	KRA302E-RTK/P	T	184.7/148
Q2051	1530003900	S.TRA	KTC4075 BL-RTK/P	T	162.6/145.3

[MAIN UNIT]

REF NO.	PARTS NO.	DESCRIPTION		M.	H/V LOCATION
Q2101	1590003770	S.TRA	KRA302E-RTK/P	T	159.4/41.8
Q2102	1590003680	S.TRA	KRC402 RTK/P	T	159.6/39.5
Q2201	1590001650	S.TRA	XP4601(TX)	T	189.8/40.3
Q2301	1590003680	S.TRA	KRC402 RTK/P	T	145.7/5.2
Q2302	1590003680	S.TRA	KRC402 RTK/P	T	139.6/5.2
Q2311	1540000471	S.TRA	2SD1801S-TL-E	B	132.5/9.5
Q2312	1560001330	S.FET	RSR025N03	T	109.1/16
Q2361	1550000010	S.FET	2SJ364-Q (TX)	T	101.5/26.6
Q3001	1530002601	S.TRA	2SC4215-O(TE85R,F)	B	145.3/32.9
Q3201	1530003450	S.TRA	2SC4835-R(TX)	T	120.3/74.8
Q3202	1530003450	S.TRA	2SC4835-R(TX)	T	126.8/74.8
Q3501	1580000751	S.FET	3SK294(TE85L,F)	T	108.6/55.6
Q3502	1590003680	S.TRA	KRC402 RTK/P	T	99.9/60.5
Q3504	1560000561	S.FET	2SK882-GR(TE85L,F)	B	114.1/85.7
Q3601	1530003021	S.TRA	2SC4402-3-TL-E	B	152.7/82.8
Q3602	1530003021	S.TRA	2SC4402-3-TL-E	B	159.2/81
Q3603	1530003842	S.TRA	2SC5501A-4-TR-E	T	162.4/86.6
Q6003	1530003900	S.TRA	KTC4075 BL-RTK/P	T	150.3/119
Q6004	1530003240	S.TRA	2SC4536 QS-T1	T	134/110.5
Q6005	1560000561	S.FET	2SK882-GR(TE85L,F)	B	110.5/100.4
Q6006	1530003340	S.TRA	2SC3357-T1 RF	T	96.2/132.1
Q6007	1560000561	S.FET	2SK882-GR(TE85L,F)	T	114.8/104.4
Q6008	1590003680	S.TRA	KRC402 RTK/P	T	85.5/107.4
D1001	1790000661	S.DIO	MA2J7280GL(TX)	B	27.6/104.3
D1002	1790000661	S.DIO	MA2J7280GL(TX)	B	30.1/104.3
D1101	1750001180	S.DIO	KDS122 RTK/P	T	7.9/100.3
D1111	1750001180	S.DIO	KDS122 RTK/P	T	7.9/107.9
D1201	1730002341	S.ZEN	MAZ8047GML	T	44.5/128.3
D1202	1750001320	S.DIO	KDS4148U RTK/P	T	47.2/123.3
D1203	1750001320	S.DIO	KDS4148U RTK/P	B	39.2/122.8
D1204	1750001320	S.DIO	KDS4148U RTK/P	B	39.2/135.2
D1205	1750001320	S.DIO	KDS4148U RTK/P	T	36.3/127
D1206	1750001320	S.DIO	KDS4148U RTK/P	T	36.8/130.1
D1251	1790000661	S.DIO	MA2J7280GL(TX)	B	44.6/122.8
D1252	1750001320	S.DIO	KDS4148U RTK/P	T	57.4/112.8
D1302	1750001320	S.DIO	KDS4148U RTK/P	B	12.2/138.6
D1303	1750001320	S.DIO	KDS4148U RTK/P	B	23.5/136.6
D1304	1750001320	S.DIO	KDS4148U RTK/P	B	27.3/126.7
D1401	1750001320	S.DIO	KDS4148U RTK/P	B	65.2/101.4
D1406	1750001320	S.DIO	KDS4148U RTK/P	B	17/88
D1407	1750001320	S.DIO	KDS4148U RTK/P	B	19/88
D1408	1750001320	S.DIO	KDS4148U RTK/P	B	21/88
D2031	1750001320	S.DIO	KDS4148U RTK/P	T	172.1/145.1
D2041	1750001320	S.DIO	KDS4148U RTK/P	T	183.5/145.1
D2101	1790000980	S.DIO	MA742(TX)	T	169.5/29.6
D2102	1790000980	S.DIO	MA742(TX)	T	172/29.6
D2131	1750001180	S.DIO	KDS122 RTK/P	T	171.8/61.5
D2201	1750001320	S.DIO	KDS4148U RTK/P	T	192.3/37
D2301	1750001320	S.DIO	KDS4148U RTK/P	B	147.2/6.9
D2302	1750001320	S.DIO	KDS4148U RTK/P	B	141.1/6.9
D2361	1750001320	S.DIO	KDS4148U RTK/P	T	101.3/24.5
D3201	1750000431	S.DIO	HSB88WSTR-E	T	145.5/63
D3202	1750000431	S.DIO	HSB88WSTR-E	T	137.7/66.1
D3301	1750001320	S.DIO	KDS4148U RTK/P	B	126.2/33.1
D3302	1750001320	S.DIO	KDS4148U RTK/P	B	126.2/28.3
D3701	1750000581	S.DIO	1SV307(TPH3,F)	B	155.8/93.6
D3702	1750000581	S.DIO	1SV307(TPH3,F)	B	148.5/94.8
D3703	1750000431	S.DIO	HSB88WSTR-E	T	135.1/91
D4001	1750001320	S.DIO	KDS4148U RTK/P	T	78.6/22.5
D4002	1750001320	S.DIO	KDS4148U RTK/P	T	78.6/20.7
D4101	1790001041	S.ZEN	MAZ8033GLL	B	84.1/77.7
D4102	1790001041	S.ZEN	MAZ8033GLL	B	97.8/69.9
D6001	1750000971	S.DIO	CPH5513-TL-E	T	162.4/116.5
D6002	1750000441	S.DIO	1SV263-TL-E	B	161/120.2
D6003	1750000971	S.DIO	CPH5513-TL-E	T	160.5/122.8
D6004	1750000431	S.DIO	HSB88WSTR-E	T	93.4/92.5
D6005	1750000431	S.DIO	HSB88WSTR-E	T	118.6/127.1
FI3501	2020001070	CER	CFWLA455KDFA-B0 (CFWS455D)		
FI3502	2020001510	CER	CFWLA455KJFA-B0 (CFWS455IT)		
FI5001	2040000790	S.LC	EXCCET103U	T	37.6/41.4
FI5101	2040000790	S.LC	EXCCET103U	T	41.1/81
FI6001	2030000290	S.MON	DSF753SBF 45 MHz (FL-357)	T	111.9/111
X2101	6050012780	S.XTA	CR-871 DSX321G 24 MHz	T	160.3/25.2
X2131	6050012770	S.XTA	CR-870 DSX321G 12 MHz	T	164.4/60.8
L1501	6190002000	S.COI	SLF12575T-330M3R2-PF	T	163.1/13.9
L1901	6200003241	S.COI	NLV32T-221J	T	145.2/141.7
L1902	6200003241	S.COI	NLV32T-221J	T	145.2/138.7
L2001	6200002041	S.COI	NLV25T-101J	T	178/138.7
L2002	6200002041	S.COI	NLV25T-101J	T	178/135.6
L2003	6200002041	S.COI	NLV25T-101J	T	178/129.4
L2004	6200002041	S.COI	NLV25T-101J	T	178/132.5
L2005	6200002041	S.COI	NLV25T-101J	T	178/126.3
L2006	6200002041	S.COI	NLV25T-101J	T	178/118
L2007	6200002041	S.COI	NLV25T-101J	T	178/114.9
L2311	6180003640	COI	SZW1012T-142-0.3		
L2331	6200002041	S.COI	NLV25T-101J	B	87.9/10.6
L2501	6200002041	S.COI	NLV25T-101J	B	179.7/94.9
L2601	6200002041	S.COI	NLV25T-101J	T	17.1/68.5
L3001	6200001831	S.COI	NLV32T-100J	B	139.7/37.3
L3002	6200001831	S.COI	NLV32T-100J	B	139.7/40.3
L3003	6200002520	S.COI	ELJNC R18K-F	T	147.7/43.3
L3201	6200003520	S.COI	ELJFB 102K-F	T	125.7/68.9
L3202	6140002810	S.COI	LR-317	T	145.5/69
L3203	6140002810	S.COI	LR-317	T	145.5/57
L3204	6140002810	S.COI	LR-317	T	137.7/60.1
L3205	6140002810	S.COI	LR-317	T	137.7/72.1

M.=Mounted side (T: Mounted on the Top side, B: Mounted on the Bottom side)
S.=Surface mount

[MAIN UNIT]

REF NO.	PARTS NO.	DESCRIPTION	M.	H/V LOCATION
L3401	6200002041	S.COI NLV25T-101J	B	109.3/47.8
L3402	6200002041	S.COI NLV25T-101J	B	112.3/48.1
L3403	6200002041	S.COI NLV25T-101J	B	112.7/43.5
L3501	6200002041	S.COI NLV25T-101J	B	101.9/54.2
L3502	6200003520	S.COI ELJFB 102K-F	B	105.7/55
L3503	6150004090	COI LS-469 (C-13969)		
L3601	6200005011	S.COI NLV25T-100J	B	163.6/79.4
L3602	6190001621	COI #E544EN-100028		
L3603	6140003930	COI LR-492		
L3604	6200007750	S.COI LQW2BHN56NJ03L	B	162.5/93.2
L3605	6200007770	S.COI LQW2BHNR10J03L	B	159.8/94.1
L3701	6140004680	S.COI LR-528 4KBL	T	128.2/91
L3702	6140002810	S.COI LR-317	T	142.1/91
L3703	6200003281	S.COI NLV25T-2R2J	B	159.7/97.9
L3704	6200003281	S.COI NLV25T-2R2J	B	149.6/86.7
L3705	6200003281	S.COI NLV25T-2R2J	B	154.8/96.8
L3715	6200005041	S.COI NLV25T-220J	B	144.5/100.6
L4001	6200001831	S.COI NLV32T-100J	B	60.4/11.9
L4301	6200001831	S.COI NLV32T-100J	T	58.1/43.6
L4302	6200001831	S.COI NLV32T-100J	T	64.1/31.4
L4303	6200001831	S.COI NLV32T-100J	T	72/66.3
L4501	6200001831	S.COI NLV32T-100J	T	73.3/87.3
L5001	6200011900	S.COI LQH43CN100K03L	T	44/41.9
L5101	6200011900	S.COI LQH43CN100K03L	T	35.7/78.9
L6001	6200001831	S.COI NLV32T-100J	T	157.4/118
L6003	6200001831	S.COI NLV32T-100J	B	85.3/134.6
L6004	6200001831	S.COI NLV32T-100J	T	163.9/120.3
L6005	6200001831	S.COI NLV32T-100J	B	76.3/134.2
L6006	6200001831	S.COI NLV32T-100J	B	161.6/123.3
L6008	6200001831	S.COI NLV32T-100J	B	148.7/117.5
L6009	6200005051	S.COI NLV25T-330J	B	98.5/89.9
L6010	6200013650	S.COI LQW18ANR27G00D	T	74.8/104.3
L6011	6200013650	S.COI LQW18ANR27G00D	T	75.6/107.4
L6012	6200001831	S.COI NLV32T-100J	T	155.8/123.4
L6013	6200002041	S.COI NLV25T-101J	B	103.4/75.7
L6014	6200010940	S.COI C2520C-39NG-A	T	155.9/128.3
L6015	6200001831	S.COI NLV32T-100J	B	83/110.3
L6016	6140004680	S.COI LR-528 4KBL	T	87.4/92.5
L6017	6200002041	S.COI NLV25T-101J	B	90.1/87.6
L6018	6200010860	S.COI C2520C-R10G-A (0.1U)	T	152.3/129.1
L6019	6200002911	S.COI NLV25T-R27J	B	87.3/121.6
L6020	6140004680	S.COI LR-528 4KBL	T	99.4/92.5
L6021	6200004961	S.COI NLV25T-R33J	T	88.1/122.4
L6022	6200001831	S.COI NLV32T-100J	B	83/107
L6023	6150004280	COI LS-484B (C-14927)		
L6024	6200002651	S.COI NLV25T-R18J	B	76.5/111.3
L6025	6200002651	S.COI NLV25T-R18J	B	79.3/111.3
L6026	6200010450	S.COI C2520C-R82G-A (0.82U)	T	139.7/118.6
L6027	6200009851	S.COI NLV25T-R39J	B	91.4/120.4
L6028	6150004280	COI LS-484B (C-14927)		
L6029	6200009851	S.COI NLV25T-R39J	B	94.2/125.7
L6030	6200001831	S.COI NLV32T-100J	T	115.1/99.3
L6031	6200002690	S.COI MLF1608A 1R0M-T	B	139.6/113.7
L6032	6150004280	COI LS-484B (C-14927)		
L6033	6140003790	COI LR-442		
L6034	6200001831	S.COI NLV32T-100J	T	128/117
L6035	6200001831	S.COI NLV32T-100J	T	128/111.5
L6036	6200004961	S.COI NLV25T-R33J	T	90.5/133.4
L6037	6150004280	COI LS-484B (C-14927)		
L6038	6200009851	S.COI NLV25T-R39J	B	103.4/131.5
L6039	6140002810	S.COI LR-317	T	124.6/127.1
L6040	6140002810	S.COI LR-317	T	113.1/127.1
L6041	6150004250	COI LS-471A (C-14922)		
L6042	6200011670	S.COI LQW18AN82NG00D	T	110.6/117
L6043	6200002651	S.COI NLV25T-R18J	T	95.2/102
L6044	6200002841	S.COI NLV25T-R22J	T	91.6/101.1
L6045	6200002611	S.COI NLV25T-R47J	B	107/134.4
L6046	6200005140	S.COI MLF1608D R33K-T	B	72.5/118.6
L6047	6200003540	S.COI MLF1608D R22K-T	B	77.3/119.3
R1001	7030003200	S.RES ERJ3GEYJ 100 V (10)	T	25.1/114.7
R1002	7030003200	S.RES ERJ3GEYJ 100 V (10)	T	25.1/113.2
R1003	7030003200	S.RES ERJ3GEYJ 100 V (10)	T	25.1/111.9
R1004	7030003200	S.RES ERJ3GEYJ 100 V (10)	T	25.1/110.6
R1005	7030003200	S.RES ERJ3GEYJ 100 V (10)	T	25.1/109.3
R1006	7030003200	S.RES ERJ3GEYJ 100 V (10)	T	25.1/108
R1007	7030003200	S.RES ERJ3GEYJ 100 V (10)	T	25.1/106.7
R1008	7030003200	S.RES ERJ3GEYJ 100 V (10)	T	25.1/105.4
R1009	7030003200	S.RES ERJ3GEYJ 100 V (10)	T	13.8/109.4
R1010	7030003200	S.RES ERJ3GEYJ 100 V (10)	T	13.8/108.1
R1011	7030003200	S.RES ERJ3GEYJ 100 V (10)	T	13.8/106.8
R1012	7030003200	S.RES ERJ3GEYJ 100 V (10)	T	13.8/105.5
R1013	7030003200	S.RES ERJ3GEYJ 100 V (10)	T	13.8/104.2
R1014	7030003200	S.RES ERJ3GEYJ 100 V (10)	T	13.8/102.9
R1015	7030003200	S.RES ERJ3GEYJ 100 V (10)	T	13.8/101.6
R1016	7030003200	S.RES ERJ3GEYJ 100 V (10)	T	13.8/100.3
R1017	7030003200	S.RES ERJ3GEYJ 100 V (10)	T	13.8/99
R1018	7030003200	S.RES ERJ3GEYJ 100 V (10)	T	25.1/100.2
R1019	7030003200	S.RES ERJ3GEYJ 100 V (10)	T	25.1/98.9
R1020	7030003200	S.RES ERJ3GEYJ 100 V (10)	T	13.8/97.7
R1021	7030003200	S.RES ERJ3GEYJ 100 V (10)	T	25.1/97.6
R1022	7030003860	S.RES ERJ3GE JPW V	T	13.8/96.4
R1023	7030003200	S.RES ERJ3GEYJ 100 V (10)	T	13.8/95.1
R1024	7030003200	S.RES ERJ3GEYJ 100 V (10)	T	13.8/93.8
R1025	7030003200	S.RES ERJ3GEYJ 100 V (10)	T	25.1/96.3
R1026	7030003200	S.RES ERJ3GEYJ 100 V (10)	T	25.1/95
R1027	7030003200	S.RES ERJ3GEYJ 100 V (10)	T	25.1/93.7
R1028	7030003200	S.RES ERJ3GEYJ 100 V (10)	T	25.1/92.4
R1029	7030003200	S.RES ERJ3GEYJ 100 V (10)	T	25.1/91.1
R1030	7030003600	S.RES ERJ3GEYJ 223 V (22K)	T	25.1/104.1
R1031	7030003440	S.RES ERJ3GEYJ 102 V (1K)	T	25.1/89.8
R1051	7030003200	S.RES ERJ3GEYJ 100 V (10)	T	47.1/116.5
R1052	7030003200	S.RES ERJ3GEYJ 100 V (10)	T	47.1/115.2

[MAIN UNIT]

REF NO.	PARTS NO.	DESCRIPTION	M.	H/V LOCATION
R1053	7030003200	S.RES ERJ3GEYJ 100 V (10)	T	47.1/113.9
R1054	7030003200	S.RES ERJ3GEYJ 100 V (10)	T	34.2/117.8
R1055	7030003200	S.RES ERJ3GEYJ 100 V (10)	T	34.2/116.5
R1056	7030003200	S.RES ERJ3GEYJ 100 V (10)	T	34.2/115.2
R1057	7030003200	S.RES ERJ3GEYJ 100 V (10)	T	34.2/113.9
R1058	7030003200	S.RES ERJ3GEYJ 100 V (10)	T	47.1/112.6
R1059	7030003200	S.RES ERJ3GEYJ 100 V (10)	T	34.2/112.6
R1060	7030003200	S.RES ERJ3GEYJ 100 V (10)	T	34.2/111.3
R1061	7030003200	S.RES ERJ3GEYJ 100 V (10)	T	34.2/110
R1062	7030003200	S.RES ERJ3GEYJ 100 V (10)	T	47.1/111.3
R1063	7030003200	S.RES ERJ3GEYJ 100 V (10)	T	47.1/110
R1064	7030003200	S.RES ERJ3GEYJ 100 V (10)	T	34.2/108.7
R1065	7030003200	S.RES ERJ3GEYJ 100 V (10)	T	34.2/107.4
R1066	7030003200	S.RES ERJ3GEYJ 100 V (10)	T	34.2/106.1
R1067	7030003200	S.RES ERJ3GEYJ 100 V (10)	T	34.2/104.8
R1068	7030003200	S.RES ERJ3GEYJ 100 V (10)	T	34.2/103.5
R1069	7030003200	S.RES ERJ3GEYJ 100 V (10)	T	47.1/108.7
R1070	7030003200	S.RES ERJ3GEYJ 100 V (10)	T	47.1/107.4
R1071	7030003200	S.RES ERJ3GEYJ 100 V (10)	T	33.4/102.2
R1072	7030003200	S.RES ERJ3GEYJ 100 V (10)	T	33.4/100.9
R1073	7030003200	S.RES ERJ3GEYJ 100 V (10)	T	33.4/99.6
R1074	7030003200	S.RES ERJ3GEYJ 100 V (10)	T	33.4/98.3
R1075	7030003200	S.RES ERJ3GEYJ 100 V (10)	T	33.1/97
R1076	7030003200	S.RES ERJ3GEYJ 100 V (10)	T	33.5/95.7
R1077	7030003200	S.RES ERJ3GEYJ 100 V (10)	T	33.5/94.4
R1078	7030003200	S.RES ERJ3GEYJ 100 V (10)	T	34.2/93.1
R1079	7030003200	S.RES ERJ3GEYJ 100 V (10)	T	34.2/91.8
R1080	7030003200	S.RES ERJ3GEYJ 100 V (10)	T	34.2/90.5
R1081	7030003200	S.RES ERJ3GEYJ 100 V (10)	T	47.1/106.1
R1082	7030003200	S.RES ERJ3GEYJ 100 V (10)	T	47.1/104.8
R1083	7030003200	S.RES ERJ3GEYJ 100 V (10)	T	47.1/103.5
R1084	7030003200	S.RES ERJ3GEYJ 100 V (10)	T	47.1/102.2
R1085	7030003200	S.RES ERJ3GEYJ 100 V (10)	T	47.1/100.9
R1086	7030003200	S.RES ERJ3GEYJ 100 V (10)	T	34.2/89.2
R1087	7030003200	S.RES ERJ3GEYJ 100 V (10)	T	47.1/99.6
R1088	7030003200	S.RES ERJ3GEYJ 100 V (10)	T	34.2/87.9
R1089	7030003200	S.RES ERJ3GEYJ 100 V (10)	T	34.2/86.6
R1090	7030003200	S.RES ERJ3GEYJ 100 V (10)	T	34.2/85.3
R1091	7030003200	S.RES ERJ3GEYJ 100 V (10)	T	47.1/98.3
R1092	7030003200	S.RES ERJ3GEYJ 100 V (10)	T	47.1/97
R1093	7030003200	S.RES ERJ3GEYJ 100 V (10)	T	47.1/95.7
R1094	7030003200	S.RES ERJ3GEYJ 100 V (10)	T	47.1/94.4
R1095	7030003200	S.RES ERJ3GEYJ 100 V (10)	T	47.1/93.1
R1096	7030003200	S.RES ERJ3GEYJ 100 V (10)	T	47.1/91.8
R1097	7030003200	S.RES ERJ3GEYJ 100 V (10)	T	47.1/90.5
R1098	7030003200	S.RES ERJ3GEYJ 100 V (10)	T	47.1/89.2
R1101	7030003560	S.RES ERJ3GEYJ 103 V (10K)	T	8/93.2
R1102	7030003560	S.RES ERJ3GEYJ 103 V (10K)	T	5.3/93.2
R1103	7030003560	S.RES ERJ3GEYJ 103 V (10K)	T	8/94.5
R1104	7030006210	S.RES ERJ12YJ4R7U (4.7)	T	3.3/98.7
R1105	7030003440	S.RES ERJ3GEYJ 102 V (1K)	T	2/96.1
R1106	7030003240	S.RES ERJ3GEYJ 220 V (22)	B	8.9/96.5
R1107	7030003240	S.RES ERJ3GEYJ 220 V (22)	B	8.9/95.2
R1111	7030003560	S.RES ERJ3GEYJ 103 V (10K)	T	8/102.2
R1112	7030006210	S.RES ERJ12YJ4R7U (4.7)	T	3.3/106.3
R1113	7030003440	S.RES ERJ3GEYJ 102 V (1K)	T	2/103.7
R1201	7030003640	S.RES ERJ3GEYJ 473 V (47K)	T	47.4/121.7
R1202	7030003840	S.RES ERJ3GEYJ 225 V (2.2M)	B	50.1/122.6
R1203	7030011360	S.RES ERJ8GEYJ 241V (240)	T	49.3/128
R1205	7030003320	S.RES ERJ3GEYJ 101 V (100)	T	39.9/129.3
R1206	7030003640	S.RES ERJ3GEYJ 473 V (47K)	B	38.1/129.7
R1207	7030003320	S.RES ERJ3GEYJ 101 V (100)	B	36.1/123.9
R1208	7030003620	S.RES ERJ3GEYJ 333 V (33K)	T	46.5/137.7
R1209	7030003680	S.RES ERJ3GEYJ 104 V (100K)	T	43.7/137.7
R1210	7030003520	S.RES ERJ3GEYJ 472 V (4.7K)	T	47.3/134.6
R1211	7310005390	S.TRI EVM-3VSX50 BQ3 (472)	T	44.2/134.9
R1212	7030003450	S.RES ERJ3GEYJ 122 V (1.2K)	B	43/135.7
R1213	7030003520	S.RES ERJ3GEYJ 472 V (4.7K)	B	35.6/130.9
R1214	7030003560	S.RES ERJ3GEYJ 103 V (10K)	T	47.5/124.8
R1215	7030003720	S.RES ERJ3GEYJ 224 V (220K)	B	37.4/125.4
R1216	7030003480	S.RES ERJ3GEYJ 222 V (2.2K)	B	35.6/127.7
R1217	7030003560	S.RES ERJ3GEYJ 103 V (10K)	T	39.3/126.7
R1218	7030003660	S.RES ERJ3GEYJ 683 V (68K)	T	39.3/128
R1219	7030003680	S.RES ERJ3GEYJ 104 V (100K)	T	36.6/125.5
R1220	7030003720	S.RES ERJ3GEYJ 224 V (220K)	B	38.1/132.9
R1221	7030003380	S.RES ERJ3GEYJ 331 V (330)	B	36.8/134.4
R1222	7030003740	S.RES ERJ3GEYJ 334 V (330K)	B	49.9/133.1
R1223	7510001511	S.THE NTCG16 4LH 223JT	T	36.2/128.6
R1224	7030005681	S.RES ERA3YKD 473V (47K)	B	53/133.9
R1225	7030008121	S.RES ERA3YED 682V (6.8K)	B	50.7/134.6
R1226	7030009861	S.RES ERA3YED 471V (470)	T	47.3/130.9
R1227	7310005370	S.TRI EVM-3VSX50 BQ2 (471)	T	44.2/131.2
R1228	7030008121	S.RES ERA3YED 682V (6.8K)	B	50.7/131.4
R1229	7030005681	S.RES ERA3YKD 473V (47K)	B	50.7/129.8
R1241	7030003560	S.RES ERJ3GEYJ 103 V (10K)	T	37.4/121
R1242	7030003720	S.RES ERJ3GEYJ 224 V (220K)	T	39.3/125.4
R1243	7030003440	S.RES ERJ3GEYJ 102 V (1K)	B	21.9/124.3
R1244	7030003680	S.RES ERJ3GEYJ 104 V (100K)	B	24/125.1
R1245	7030003440	S.RES ERJ3GEYJ 102 V (1K)	B	18.7/121.5
R1251	7030003310	S.RES ERJ3GEYJ 820 V (82)	B	41.1/118.7
R1252	7030003320	S.RES ERJ3GEYJ 101 V (100)	B	47/121.6
R1253	7030003380	S.RES ERJ3GEYJ 331 V (330)	B	48.3/123.1
R1254	7030009920	S.RES ERJ3GEYJ 335 V (3.3M)	B	50.7/125.9
R1255	7310005420	S.TRI EVM-3VSX50 B15 (104)	T	55.4/121.2
R1256	7030003680	S.RES ERJ3GEYJ 104 V (100K)	T	52.9/113.1
R1257	7030003560	S.RES ERJ3GEYJ 103 V (10K)	T	52.9/111.3
R1258	7030003640	S.RES ERJ3GEYJ 473 V (47K)	T	57.7/114.3
R1259	7030003760	S.RES ERJ3GEYJ 474 V (470K)	B	53/125.9
R1260	7030003720	S.RES ERJ3GEYJ 224 V (220K)	T	53.6/130
R1262	7310005430	S.TRI EVM-3VSX50 BE5 (224)	T	55.4/127.5
R1263	7030003680	S.RES ERJ3GEYJ 104 V (100K)	B	54.8/125.9
R1264	7030003620	S.RES ERJ3GEYJ 333 V (33K)	T	56.3/130
R1267	7310005430	S.TRI EVM-3VSX50 BE5 (224)	T	55.4/136.4
R1268	7030003600	S.RES ERJ3GEYJ 223 V (22K)	T	56.3/131.3

M.=Mounted side (T: Mounted on the Top side, B: Mounted on the Bottom side)
S.=Surface mount

[MAIN UNIT]

REF NO.	PARTS NO.	DESCRIPTION	M.	H/V LOCATION
R1272	7030003560	S.RES ERJ3GEYJ 103 V (10K)	T	45.7/119.9
R1301	7030003320	S.RES ERJ3GEYJ 101 V (100)	B	18/124.3
R1302	7030003320	S.RES ERJ3GEYJ 101 V (100)	B	19.1/137.8
R1303	7030003360	S.RES ERJ3GEYJ 221 V (220)	B	8.8/139.1
R1304	7030003560	S.RES ERJ3GEYJ 103 V (10K)	B	9/136.3
R1305	7030003360	S.RES ERJ3GEYJ 221 V (220)	B	26.6/136.6
R1306	7030003640	S.RES ERJ3GEYJ 473 V (47K)	B	27.5/134.2
R1307	7030003730	S.RES ERJ3GEYJ 274 V (270K)	B	12.5/136
R1308	7030003860	S.RES ERJ3GE JPW V	B	25.1/135
R1309	7030009920	S.RES ERJ3GEYJ 335 V (3.3M)	B	24.9/127.4
R1310	7030003820	S.RES ERJ3GEYJ 155 V (1.5M)	B	8.5/132
R1311	7030003680	S.RES ERJ3GEYJ 104 V (100K)	B	10.1/133.8
R1312	7030003200	S.RES ERJ3GEYJ 100 V (10)	B	12.9/132
R1313	7030003680	S.RES ERJ3GEYJ 104 V (100K)	B	24.3/133.7
R1314	7030003200	S.RES ERJ3GEYJ 100 V (10)	B	24.3/131.1
R1315	7030003740	S.RES ERJ3GEYJ 334 V (330K)	B	7.8/129.6
R1317	7030003820	S.RES ERJ3GEYJ 155 V (1.5M)	B	19.9/124.4
R1318	7030003840	S.RES ERJ3GEYJ 225 V (2.2M)	B	25.1/129.8
R1319	7030003860	S.RES ERJ3GE JPW V	B	12.6/128.2
R1401	7030003680	S.RES ERJ3GEYJ 104 V (100K)	T	165.7/130.2
R1402	7030003680	S.RES ERJ3GEYJ 104 V (100K)	T	168.5/130.2
R1403	7030003400	S.RES ERJ3GEYJ 471 V (470)	T	171.3/130.2
R1404	7030003320	S.RES ERJ3GEYJ 101 V (100)	T	170.9/135.7
R1405	7030007230	S.RES ERA3YED 102V (1K)	T	61.9/102.7
R1406	7030008061	S.RES ERA3YED 222V (2.2K)	B	61.5/101.4
R1407	7030003640	S.RES ERJ3GEYJ 473 V (47K)	T	11.6/91.6
R1408	7030003640	S.RES ERJ3GEYJ 473 V (47K)	T	13/91.6
R1701	7030003200	S.RES ERJ3GEYJ 100 V (10)	T	137.8/139.9
R1702	7030003200	S.RES ERJ3GEYJ 100 V (10)	T	136.5/139.9
R1703	7030003200	S.RES ERJ3GEYJ 100 V (10)	T	135.2/139.9
R1705	7030003200	S.RES ERJ3GEYJ 100 V (10)	T	132.6/139.9
R1706	7030003200	S.RES ERJ3GEYJ 100 V (10)	T	131.3/139.9
R1801	7030003200	S.RES ERJ3GEYJ 100 V (10)	T	50.6/142.5
R1802	7030003200	S.RES ERJ3GEYJ 100 V (10)	T	51.9/142.5
R1803	7030003200	S.RES ERJ3GEYJ 100 V (10)	T	53.2/142.5
R1804	7030003200	S.RES ERJ3GEYJ 100 V (10)	T	54.5/142.5
R1805	7030003200	S.RES ERJ3GEYJ 100 V (10)	T	55.8/142.5
R1806	7030003200	S.RES ERJ3GEYJ 100 V (10)	T	57.1/142.5
R1807	7030003200	S.RES ERJ3GEYJ 100 V (10)	T	58.4/142.5
R1808	7030003200	S.RES ERJ3GEYJ 100 V (10)	T	59.7/142.5
R1809	7030003200	S.RES ERJ3GEYJ 100 V (10)	T	61/142.5
R1810	7030003200	S.RES ERJ3GEYJ 100 V (10)	T	62.3/142.5
R2001	7030003550	S.RES ERJ3GEYJ 822 V (8.2K)	T	168.8/145.4
R2002	7030003570	S.RES ERJ3GEYJ 123 V (12K)	B	173.1/81.7
R2003	7030003440	S.RES ERJ3GEYJ 102 V (1K)	B	171.3/81.6
R2004	7030003520	S.RES ERJ3GEYJ 472 V (4.7K)	B	168.3/73.8
R2005	7030003320	S.RES ERJ3GEYJ 101 V (100)	T	177.7/75.9
R2006	7030003320	S.RES ERJ3GEYJ 101 V (100)	B	174.4/69.6
R2007	7030003860	S.RES ERJ3GE JPW V	B	177.4/81.7
R2008	7030003560	S.RES ERJ3GEYJ 103 V (10K)	B	181.5/81.7
R2031	7030003520	S.RES ERJ3GEYJ 472 V (4.7K)	T	175.3/145.4
R2032	7030003620	S.RES ERJ3GEYJ 333 V (33K)	T	174/145.4
R2033	7030003520	S.RES ERJ3GEYJ 472 V (4.7K)	T	170.2/145.4
R2034	7030003580	S.RES ERJ3GEYJ 153 V (15K)	T	174/148.1
R2041	7030003520	S.RES ERJ3GEYJ 472 V (4.7K)	T	183.1/148.1
R2042	7030003620	S.RES ERJ3GEYJ 333 V (33K)	T	181.8/148.1
R2043	7030003580	S.RES ERJ3GEYJ 153 V (15K)	T	180.3/148.1
R2044	7030003520	S.RES ERJ3GEYJ 472 V (4.7K)	T	176.6/145.4
R2045	7030003560	S.RES ERJ3GEYJ 103 V (10K)	T	189.5/148.1
R2046	7030003340	S.RES ERJ3GEYJ 151 V (150)	T	186.9/148.1
R2051	7030003560	S.RES ERJ3GEYJ 103 V (10K)	T	164.5/145.4
R2052	7030003520	S.RES ERJ3GEYJ 472 V (4.7K)	T	164.5/148.1
R2053	7030003640	S.RES ERJ3GEYJ 473 V (47K)	T	160.7/145.4
R2062	7030003560	S.RES ERJ3GEYJ 103 V (10K)	T	176.6/73.4
R2063	7030003320	S.RES ERJ3GEYJ 101 V (100)	T	177.9/73.4
R2101	7030003800	S.RES ERJ3GEYJ 105 V (1M)	T	160.8/27.3
R2102	7030003250	S.RES ERJ3GEYJ 270 V (27)	T	168.8/32
R2103	7030003250	S.RES ERJ3GEYJ 270 V (27)	T	168.8/33.3
R2104	7030003240	S.RES ERJ3GEYJ 220 V (22)	B	168.1/36.5
R2105	7030003400	S.RES ERJ3GEYJ 471 V (470)	T	157/34.1
R2106	7030003560	S.RES ERJ3GEYJ 103 V (10K)	T	157.1/35.8
R2107	7030003680	S.RES ERJ3GEYJ 104 V (100K)	T	155.3/37.4
R2108	7030005691	S.RES ERA3YED 123V (12K)	B	166.1/29.7
R2109	7030003240	S.RES ERJ3GEYJ 220 V (22)	B	168.8/34
R2110	7030003560	S.RES ERJ3GEYJ 103 V (10K)	T	157.1/37.1
R2111	7030003460	S.RES ERJ3GEYJ 152 V (1.5K)	T	168.9/38.1
R2112	7030003640	S.RES ERJ3GEYJ 473 V (47K)	T	177.9/30.3
R2113	7030003680	S.RES ERJ3GEYJ 104 V (100K)	T	166.8/40.1
R2114	7030003680	S.RES ERJ3GEYJ 104 V (100K)	T	165.5/40.1
R2115	7030003560	S.RES ERJ3GEYJ 103 V (10K)	B	170.5/67
R2116	7030003560	S.RES ERJ3GEYJ 103 V (10K)	B	170.5/69.6
R2117	7030003860	S.RES ERJ3GE JPW V	B	177.5/69.6
R2118	7030003610	S.RES ERJ3GEYJ 273 V (27K)	B	182.4/72.8
R2121	7030003520	S.RES ERJ3GEYJ 472 V (4.7K)	T	176.5/36.8
R2131	7030003440	S.RES ERJ3GEYJ 102 V (1K)	B	174.1/61.3
R2132	7030003560	S.RES ERJ3GEYJ 103 V (10K)	B	171.9/61.3
R2133	7030003560	S.RES ERJ3GEYJ 103 V (10K)	T	171.2/58.8
R2135	7030003320	S.RES ERJ3GEYJ 101 V (100)	B	179.4/69.6
R2137	7030003800	S.RES ERJ3GEYJ 105 V (1M)	T	160.7/47.8
R2138	7030003800	S.RES ERJ3GEYJ 105 V (1M)	T	163.6/58.6
R2139	7030003560	S.RES ERJ3GEYJ 103 V (10K)	T	175.9/55.4
R2140	7030003680	S.RES ERJ3GEYJ 104 V (100K)	T	174.6/55.4
R2141	7030003680	S.RES ERJ3GEYJ 104 V (100K)	T	173.3/55.4
R2202	7030003590	S.RES ERJ3GEYJ 183 V (18K)	B	189.4/37.8
R2203	7030003560	S.RES ERJ3GEYJ 103 V (10K)	T	189.3/38.3
R2205	7030003640	S.RES ERJ3GEYJ 473 V (47K)	T	187.9/41.9
R2206	7030003570	S.RES ERJ3GEYJ 123 V (12K)	T	189.8/43.9
R2207	7030003560	S.RES ERJ3GEYJ 103 V (10K)	B	180.5/54.2
R2208	7030003560	S.RES ERJ3GEYJ 103 V (10K)	B	182.9/35.4
R2209	7030003680	S.RES ERJ3GEYJ 104 V (100K)	B	185.1/35.4
R2301	7030003360	S.RES ERJ3GEYJ 221 V (220)	B	149/5.3
R2302	7030003360	S.RES ERJ3GEYJ 221 V (220)	B	142.9/5.3
R2303	7030003360	S.RES ERJ3GEYJ 221 V (220)	B	7.9/70
R2304	7030003420	S.RES ERJ3GEYJ 681 V (680)	B	12.7/69.2

[MAIN UNIT]

REF NO.	PARTS NO.	DESCRIPTION	M.	H/V LOCATION
R2305	7030003560	S.RES ERJ3GEYJ 103 V (10K)	B	94.4/5.7
R2308	7030003560	S.RES ERJ3GEYJ 103 V (10K)	T	96/9.9
R2311	7030003440	S.RES ERJ3GEYJ 102 V (1K)	B	136.4/19.5
R2312	7030004040	S.RES ERJ3GEYJ 4R7 V (4.7)	B	108.1/4.7
R2313	7030003600	S.RES ERJ3GEYJ 223 V (22K)	B	135.7/17.4
R2314	7030003560	S.RES ERJ3GEYJ 103 V (10K)	B	99.8/6.8
R2315	7030003660	S.RES ERJ3GEYJ 683 V (68K)	T	99.1/11.3
R2318	7030003280	S.RES ERJ3GEYJ 470 V (47)	B	131/15.2
R2319	7030003440	S.RES ERJ3GEYJ 102 V (1K)	T	109.4/12.1
R2320	7030003520	S.RES ERJ3GEYJ 472 V (4.7K)	B	114.1/17.5
R2321	7030003720	S.RES ERJ3GEYJ 224 V (220K)	B	100.9/12.3
R2323	7030003680	S.RES ERJ3GEYJ 104 V (100K)	T	109.4/13.5
R2324	7030003540	S.RES ERJ3GEYJ 682 V (6.8K)	B	105.6/10
R2325	7030003560	S.RES ERJ3GEYJ 103 V (10K)	T	110.1/20.3
R2326	7030003320	S.RES ERJ3GEYJ 101 V (100)	T	96/20.4
R2327	7030003320	S.RES ERJ3GEYJ 101 V (100)	T	98.2/15.7
R2333	7030003470	S.RES ERJ3GEYJ 182 V (1.8K)	T	64.1/96.9
R2334	7030003470	S.RES ERJ3GEYJ 182 V (1.8K)	T	64.1/98.1
R2335	7030003480	S.RES ERJ3GEYJ 222 V (2.2K)	T	87.6/10
R2336	7030003560	S.RES ERJ3GEYJ 103 V (10K)	T	96/12.9
R2351	7030003860	S.RES ERJ3GE JPW V	B	93.6/24.7
R2352	7030003570	S.RES ERJ3GEYJ 123 V (12K)	B	90.5/20.5
R2353	7030003560	S.RES ERJ3GEYJ 103 V (10K)	B	95.2/24.7
R2354	7030003560	S.RES ERJ3GEYJ 103 V (10K)	B	96.8/25.5
R2361	7030003500	S.RES ERJ3GEYJ 332 V (3.3K)	B	103.6/18.4
R2362	7030003440	S.RES ERJ3GEYJ 102 V (1K)	B	103.6/21.2
R2363	7030003560	S.RES ERJ3GEYJ 103 V (10K)	B	100.8/24
R2364	7030003460	S.RES ERJ3GEYJ 152 V (1.5K)	B	100.8/27.5
R2365	7030003560	S.RES ERJ3GEYJ 103 V (10K)	B	98.4/24.7
R2366	7030003480	S.RES ERJ3GEYJ 222 V (2.2K)	T	100.8/28.5
R2367	7030003560	S.RES ERJ3GEYJ 103 V (10K)	B	98.4/27.5
R2369	7030003440	S.RES ERJ3GEYJ 102 V (1K)	T	100.8/29.8
R2370	7030003600	S.RES ERJ3GEYJ 223 V (22K)	T	103.7/25.7
R2371	7030003700	S.RES ERJ3GEYJ 154 V (150K)	T	101/22.9
R2372	7030003460	S.RES ERJ3GEYJ 152 V (1.5K)	T	101/21.6
R2373	7030003320	S.RES ERJ3GEYJ 101 V (100)	T	99.5/15.7
R2374	7030003460	S.RES ERJ3GEYJ 152 V (1.5K)	T	103.8/18.3
R2375	7030003560	S.RES ERJ3GEYJ 103 V (10K)	T	103.8/21.6
R2401	7030003860	S.RES ERJ3GE JPW V	B	195.6/81.9
R2601	7030003520	S.RES ERJ3GEYJ 472 V (4.7K)	T	4.7/60.2
R2602	7030003560	S.RES ERJ3GEYJ 103 V (10K)	T	17.9/60
R2603	7030003550	S.RES ERJ3GEYJ 822 V (8.2K)	T	17.9/61.3
R2604	7030003560	S.RES ERJ3GEYJ 103 V (10K)	T	17.3/66.6
R2605	7030003550	S.RES ERJ3GEYJ 822 V (8.2K)	T	17.9/65.4
R2607	7030003560	S.RES ERJ3GEYJ 103 V (10K)	T	6.5/59.4
R2608	7030003720	S.RES ERJ3GEYJ 224 V (220K)	T	6/62
R2609	7030003560	S.RES ERJ3GEYJ 103 V (10K)	T	6.5/56.8
R3001	7030003380	S.RES ERJ3GEYJ 331 V (330)	B	145.1/26.9
R3002	7030003220	S.RES ERJ3GEYJ 150 V (15)	B	143.1/27.4
R3003	7030003380	S.RES ERJ3GEYJ 331 V (330)	B	145.1/29.5
R3004	7030003400	S.RES ERJ3GEYJ 471 V (470)	B	143.1/35.8
R3005	7030003630	S.RES ERJ3GEYJ 393 V (39K)	B	143.1/33
R3006	7030003680	S.RES ERJ3GEYJ 104 V (100K)	T	144.8/34
R3007	7030003280	S.RES ERJ3GEYJ 470 V (47)	B	144.7/35.8
R3008	7030003320	S.RES ERJ3GEYJ 101 V (100)	T	147.7/37.6
R3009	7030003320	S.RES ERJ3GEYJ 101 V (100)	T	147.7/40.2
R3010	7030003360	S.RES ERJ3GEYJ 221 V (220)	B	146.1/43.4
R3011	7030003360	S.RES ERJ3GEYJ 221 V (220)	B	144.2/44.2
R3013	7030003860	S.RES ERJ3GE JPW V	B	86.5/27.6
R3015	7030003560	S.RES ERJ3GEYJ 103 V (10K)	T	92.2/24
R3016	7030003860	S.RES ERJ3GE JPW V	T	92.2/25.3
R3201	7030010390	S.RES ERA3YED 821V (820)	B	116.5/39.6
R3202	7030009691	S.RES ERA3YED 101V (100)	B	114.4/37.7
R3203	7030008061	S.RES ERA3YED 222V (2.2K)	B	118.3/42.7
R3204	7030005321	S.RES ERA3YED 103V (10K)	B	129.1/48.3
R3205	7030005321	S.RES ERA3YED 103V (10K)	B	123.8/45.7
R3206	7030005321	S.RES ERA3YED 103V (10K)	B	126.6/57.5
R3207	7030005321	S.RES ERA3YED 103V (10K)	B	123.8/57.5
R3208	7030003320	S.RES ERJ3GEYJ 101 V (100)	T	122.6/48.5
R3209	7030005321	S.RES ERA3YED 103V (10K)	B	121/45.7
R3210	7030005321	S.RES ERA3YED 103V (10K)	B	118.2/50.7
R3211	7030005321	S.RES ERA3YED 103V (10K)	B	117.4/45.9
R3212	7030009861	S.RES ERA3YED 471V (470)	B	115.9/59.3
R3213	7030005321	S.RES ERA3YED 103V (10K)	B	121/57.5
R3214	7030005321	S.RES ERA3YED 103V (10K)	B	117.4/52.3
R3215	7030005321	S.RES ERA3YED 103V (10K)	B	118.2/57.1
R3216	7310004780	S.TRI EVM-3YSX50 B13 (102)	T	129.7/55.8
R3217	7030003320	S.RES ERJ3GEYJ 101 V (100)	T	125.9/40.5
R3218	7030003320	S.RES ERJ3GEYJ 101 V (100)	T	122.6/65.3
R3219	7030003320	S.RES ERJ3GEYJ 101 V (100)	T	125.9/65.3
R3220	7030010560	S.RES ERA3YED 302V (3K)	B	115.9/60.9
R3221	7030007230	S.RES ERA3YED 102V (1K)	B	115.9/62.5
R3222	7030007230	S.RES ERA3YED 102V (1K)	B	118.5/64.6
R3223	7030007230	S.RES ERA3YED 102V (1K)	B	118.5/66.2
R3224	7030007230	S.RES ERA3YED 102V (1K)	B	123.8/68.6
R3225	7030003510	S.RES ERJ3GEYJ 392 V (3.9K)	B	121.9/78.8
R3226	7030010560	S.RES ERA3YED 302V (3K)	B	129.9/63.6
R3227	7030007230	S.RES ERA3YED 102V (1K)	B	129.9/62
R3228	7030007230	S.RES ERA3YED 102V (1K)	B	124.4/64.6
R3229	7030007230	S.RES ERA3YED 102V (1K)	B	121.3/66.2
R3230	7030007230	S.RES ERA3YED 102V (1K)	B	126.9/68.6
R3231	7030003460	S.RES ERJ3GEYJ 152 V (1.5K)	T	127.5/77.7
R3232	7030011050	S.RES ERA3YHD 100V (10)	T	118.4/74.7
R3233	7030009851	S.RES ERA3YED 271V (270)	T	119.7/77.7
R3234	7030009841	S.RES ERA3YHD 330V (33)	B	128.3/76
R3235	7030010980	S.RES ERA3YHD 470V (47)	B	145.5/65.7
R3236	7030011050	S.RES ERA3YHD 100V (10)	T	124.9/74.7
R3237	7030009851	S.RES ERA3YED 271V (270)	T	126.2/77.7
R3238	7030009841	S.RES ERA3YHD 330V (33)	B	132.9/72.8
R3239	7030010980	S.RES ERA3YHD 470V (47)	B	137.7/68.9
R3240	7030003320	S.RES ERJ3GEYJ 101 V (100)	T	122.6/49.8
R3241	7030003320	S.RES ERJ3GEYJ 101 V (100)	T	125.9/46.3
R3301	7030003440	S.RES ERJ3GEYJ 102 V (1K)	B	127.8/36.6
R3302	7030003370	S.RES ERJ3GEYJ 271 V (270)	B	129.4/37.8

M.=Mounted side (T: Mounted on the Top side, B: Mounted on the Bottom side)
S.=Surface mount

[MAIN UNIT]

REF NO.	PARTS NO.	DESCRIPTION	M.	H/V LOCATION
R3303	7030003800	S.RES ERJ3GEYJ 105 V (1M)	B	132.7/39.3
R3304	7030003360	S.RES ERJ3GEYJ 221 V (220)	B	125.4/35.8
R3305	7030003360	S.RES ERJ3GEYJ 221 V (220)	B	125.4/25.6
R3306	7030005321	S.RES ERA3YED 103V (10K)	B	122.6/25.6
R3307	7030005321	S.RES ERA3YED 103V (10K)	B	123.2/37.3
R3308	7030005321	S.RES ERA3YED 103V (10K)	B	124.6/30.7
R3309	7030009591	S.RES ERA3YED 472V (4.7K)	B	119.2/25.6
R3310	7030005321	S.RES ERA3YED 103V (10K)	B	120.1/36.6
R3311	7030009591	S.RES ERA3YED 472V (4.7K)	B	116.7/33.8
R3312	7030003320	S.RES ERJ3GEYJ 101 V (100)	T	121.7/38.8
R3313	7030003320	S.RES ERJ3GEYJ 101 V (100)	T	123.5/36.9
R3401	7030003320	S.RES ERJ3GEYJ 101 V (100)	T	106/41.6
R3402	7030003280	S.RES ERJ3GEYJ 470 V (47)	T	104.7/41.6
R3403	7030007230	S.RES ERA3YED 102V (1K)	B	94.1/33.3
R3405	7030007230	S.RES ERA3YED 102V (1K)	B	95.6/34.6
R3406	7030007230	S.RES ERA3YED 102V (1K)	B	97.7/38.2
R3407	7030007230	S.RES ERA3YED 102V (1K)	B	104.4/38.5
R3408	7030007230	S.RES ERA3YED 102V (1K)	B	109.2/36.9
R3409	7030009591	S.RES ERA3YED 472V (4.7K)	T	107.3/41.6
R3410	7030007230	S.RES ERA3YED 102V (1K)	T	108.6/41.6
R3411	7030003320	S.RES ERJ3GEYJ 101 V (100)	T	102.2/34.2
R3412	7030003320	S.RES ERJ3GEYJ 101 V (100)	T	105.8/34.3
R3413	7030003440	S.RES ERJ3GEYJ 102 V (1K)	T	110.7/48.5
R3414	7030003410	S.RES ERJ3GEYJ 561 V (560)	B	114.2/48.4
R3501	7030003400	S.RES ERJ3GEYJ 471 V (470)	B	109.4/55.5
R3502	7030003630	S.RES ERJ3GEYJ 393 V (39K)	T	108.6/52.4
R3503	7030003560	S.RES ERJ3GEYJ 103 V (10K)	T	111.8/56.3
R3504	7030003600	S.RES ERJ3GEYJ 223 V (22K)	T	111.8/55
R3505	7030003600	S.RES ERJ3GEYJ 223 V (22K)	T	111.8/53.7
R3506	7030003560	S.RES ERJ3GEYJ 103 V (10K)	T	108.6/53.7
R3507	7030003460	S.RES ERJ3GEYJ 152 V (1.5K)	T	111.8/57.6
R3508	7030003320	S.RES ERJ3GEYJ 101 V (100)	T	102.6/57.6
R3509	7030003320	S.RES ERJ3GEYJ 101 V (100)	T	112.6/75.4
R3510	7030003320	S.RES ERJ3GEYJ 101 V (100)	T	112.6/78.2
R3511	7030003360	S.RES ERJ3GEYJ 221 V (220)	T	105.4/53.7
R3512	7030003320	S.RES ERJ3GEYJ 101 V (100)	B	111.7/60.4
R3513	7030003520	S.RES ERJ3GEYJ 472 V (4.7K)	T	111.8/58.9
R3514	7030003320	S.RES ERJ3GEYJ 101 V (100)	T	104.1/60.5
R3515	7030003320	S.RES ERJ3GEYJ 101 V (100)	T	107.5/75.4
R3516	7030003640	S.RES ERJ3GEYJ 473 V (47K)	T	102/59.8
R3517	7030003400	S.RES ERJ3GEYJ 471 V (470)	B	111.2/83.8
R3518	7030003490	S.RES ERJ3GEYJ 272 V (2.7K)	B	114.3/83.8
R3519	7030003320	S.RES ERJ3GEYJ 101 V (100)	T	114.6/81.1
R3520	7310005400	S.TRI EVM-3VSX50 BE4 (223)	T	112.1/82.9
R3521	7030003400	S.RES ERJ3GEYJ 471 V (470)	B	110.6/86.5
R3522	7030003550	S.RES ERJ3GEYJ 822 V (8.2K)	B	110.1/77.2
R3523	7030003530	S.RES ERJ3GEYJ 562 V (5.6K)	B	111.6/65.2
R3524	7030003500	S.RES ERJ3GEYJ 332 V (3.3K)	B	112.3/68.4
R3601	7030003860	S.RES ERJ3GE JPW V	B	153.8/71
R3602	7030003320	S.RES ERJ3GEYJ 101 V (100)	B	166.6/79.7
R3603	7030003200	S.RES ERJ3GEYJ 100 V (10)	B	152.3/79.9
R3604	7030003200	S.RES ERJ3GEYJ 100 V (10)	B	156.5/79.7
R3605	7030003280	S.RES ERJ3GEYJ 470 V (47)	B	156.4/76
R3606	7030003680	S.RES ERJ3GEYJ 104 V (100K)	B	166.2/82.5
R3607	7030003550	S.RES ERJ3GEYJ 822 V (8.2K)	B	162.4/81.9
R3608	7030003520	S.RES ERJ3GEYJ 472 V (4.7K)	B	156.9/82.4
R3609	7030003200	S.RES ERJ3GEYJ 100 V (10)	B	159.1/84.6
R3610	7030003300	S.RES ERJ3GEYJ 680 V (68)	B	156.8/87.4
R3611	7030003200	S.RES ERJ3GEYJ 100 V (10)	T	161.7/89.3
R3612	7030003550	S.RES ERJ3GEYJ 822 V (8.2K)	T	164.4/82.8
R3614	7030003680	S.RES ERJ3GEYJ 104 V (100K)	B	163.1/84.3
R3616	7030003520	S.RES ERJ3GEYJ 472 V (4.7K)	T	163/84.6
R3617	7030003400	S.RES ERJ3GEYJ 471 V (470)	T	165/88.5
R3618	7030003340	S.RES ERJ3GEYJ 151 V (150)	T	165.6/84.6
R3619	7030003440	S.RES ERJ3GEYJ 102 V (1K)	T	165/89.8
R3620	7030003360	S.RES ERJ3GEYJ 221 V (220)	B	157.4/96.8
R3651	7030003640	S.RES ERJ3GEYJ 473 V (47K)	T	167.4/77.8
R3701	7030003360	S.RES ERJ3GEYJ 221 V (220)	B	150.5/91.1
R3702	7030003430	S.RES ERJ3GEYJ 821 V (820)	B	124.8/86
R3703	7030004030	S.RES ERJ3GEYJ 5R6 V (5.6)	B	126.4/88
R3704	7030003430	S.RES ERJ3GEYJ 821 V (820)	B	125.7/90.4
R3705	7030003370	S.RES ERJ3GEYJ 271 V (270)	B	132.2/90.3
R3706	7030003400	S.RES ERJ3GEYJ 471 V (470)	B	152.4/95.5
R3707	7030003430	S.RES ERJ3GEYJ 821 V (820)	B	144/92.7
R3708	7030004030	S.RES ERJ3GEYJ 5R6 V (5.6)	B	145.5/90.4
R3709	7030003430	S.RES ERJ3GEYJ 821 V (820)	B	146.9/92.7
R3710	7030003230	S.RES ERJ3GEYJ 180 V (18)	B	135/89.6
R3711	7030003370	S.RES ERJ3GEYJ 271 V (270)	B	137.4/90.3
R3715	7030003370	S.RES ERJ3GEYJ 271 V (270)	B	138.6/100.1
R3716	7030003230	S.RES ERJ3GEYJ 180 V (18)	B	140.7/101.8
R3717	7030003370	S.RES ERJ3GEYJ 271 V (270)	B	141/99.8
R3718	7030003200	S.RES ERJ3GEYJ 100 V (10)	T	141.4/99
R4001	7030003320	S.RES ERJ3GEYJ 101 V (100)	B	83.6/24.4
R4002	7030003320	S.RES ERJ3GEYJ 101 V (100)	B	75.2/18.5
R4003	7030003490	S.RES ERJ3GEYJ 272 V (2.7K)	T	82.7/13.2
R4004	7030003490	S.RES ERJ3GEYJ 272 V (2.7K)	T	79.2/17.7
R4005	7030003320	S.RES ERJ3GEYJ 101 V (100)	B	77.3/6.8
R4006	7030003320	S.RES ERJ3GEYJ 101 V (100)	B	83.5/14.3
R4007	7030003520	S.RES ERJ3GEYJ 472 V (4.7K)	T	81.9/22.5
R4008	7030006601	S.RES ERA3YED 272V (2.7K)	T	77.8/12.4
R4009	7030003440	S.RES ERJ3GEYJ 102 V (1K)	T	77.8/9.4
R4010	7030006601	S.RES ERA3YED 272V (2.7K)	T	79.2/15.2
R4011	7030003440	S.RES ERJ3GEYJ 102 V (1K)	T	77.8/10.7
R4012	7030003440	S.RES ERJ3GEYJ 102 V (1K)	T	73.9/12.4
R4013	7030003440	S.RES ERJ3GEYJ 102 V (1K)	T	76.6/15.2
R4014	7030003680	S.RES ERJ3GEYJ 104 V (100K)	T	78.4/24.4
R4015	7030003540	S.RES ERJ3GEYJ 682 V (6.8K)	T	81.9/25.1
R4016	7030003320	S.RES ERJ3GEYJ 101 V (100)	T	73.9/10.9
R4017	7030003320	S.RES ERJ3GEYJ 101 V (100)	T	74.6/14.5
R4018	7030003690	S.RES ERJ3GEYJ 124 V (120K)	T	76.3/22.4
R4019	7030003380	S.RES ERJ3GEYJ 331 V (330)	T	74.8/22.4
R4020	7410001090	S.ARR EXB-V8V 101JV	T	59/17.8
R4021	7030003320	S.RES ERJ3GEYJ 101 V (100)	B	97/54.8
R4022	7030003560	S.RES ERJ3GEYJ 103 V (10K)	B	97/56.4

[MAIN UNIT]

REF NO.	PARTS NO.	DESCRIPTION	M.	H/V LOCATION
R4101	7030003440	S.RES ERJ3GEYJ 102 V (1K)	T	78.2/67.6
R4102	7030003620	S.RES ERJ3GEYJ 333 V (33K)	T	93.3/69.2
R4103	7030003560	S.RES ERJ3GEYJ 103 V (10K)	B	97.5/73.3
R4104	7030003460	S.RES ERJ3GEYJ 152 V (1.5K)	B	84.3/80.1
R4105	7030003560	S.RES ERJ3GEYJ 103 V (10K)	B	97.5/71.7
R4106	7030003620	S.RES ERJ3GEYJ 333 V (33K)	B	84.5/68.8
R4107	7030003440	S.RES ERJ3GEYJ 102 V (1K)	B	84.5/66.2
R4108	7030003680	S.RES ERJ3GEYJ 104 V (100K)	B	84.5/70.4
R4109	7030003380	S.RES ERJ3GEYJ 331 V (330)	B	97.8/64.6
R4201	7030003320	S.RES ERJ3GEYJ 101 V (100)	B	75.2/57.3
R4202	7030003320	S.RES ERJ3GEYJ 101 V (100)	B	83.8/54.6
R4203	7030003400	S.RES ERJ3GEYJ 471 V (470)	T	95.2/65.8
R4204	7030003320	S.RES ERJ3GEYJ 101 V (100)	B	76.7/40.4
R4205	7030003480	S.RES ERJ3GEYJ 222 V (2.2K)	T	93.9/63.2
R4206	7030003320	S.RES ERJ3GEYJ 101 V (100)	B	82.6/39.3
R4207	7030003440	S.RES ERJ3GEYJ 102 V (1K)	T	91.9/63.2
R4208	7030006601	S.RES ERA3YED 272V (2.7K)	B	71/51.9
R4209	7030003860	S.RES ERJ3GE JPW V	B	71.4/54.4
R4210	7030006601	S.RES ERA3YED 272V (2.7K)	T	82.6/52.8
R4211	7030006601	S.RES ERA3YED 272V (2.7K)	B	73/51.1
R4212	7030006601	S.RES ERA3YED 272V (2.7K)	T	81.2/52.8
R4213	7030005321	S.RES ERA3YED 103V (10K)	T	74.5/45.6
R4214	7030003320	S.RES ERJ3GEYJ 101 V (100)	B	65.4/49.4
R4215	7030005321	S.RES ERA3YED 103V (10K)	T	67.3/45.6
R4216	7030003440	S.RES ERJ3GEYJ 102 V (1K)	B	97/61.2
R4217	7030005321	S.RES ERA3YED 103V (10K)	T	78.2/44.7
R4218	7030003320	S.RES ERJ3GEYJ 101 V (100)	T	76/50.8
R4219	7030005321	S.RES ERA3YED 103V (10K)	T	81.1/44.7
R4220	7030009591	S.RES ERA3YED 472V (4.7K)	B	62.5/41.7
R4221	7030009591	S.RES ERA3YED 472V (4.7K)	T	73.9/43.5
R4222	7030009591	S.RES ERA3YED 472V (4.7K)	T	70.2/45.7
R4223	7030009591	S.RES ERA3YED 472V (4.7K)	T	78.2/41.9
R4224	7030009591	S.RES ERA3YED 472V (4.7K)	T	81.1/41.9
R4225	7030009691	S.RES ERA3YED 101V (100)	T	71.7/45.7
R4226	7030009691	S.RES ERA3YED 101V (100)	T	68.7/43.5
R4227	7030009691	S.RES ERA3YED 101V (100)	T	76.1/41.9
R4228	7030009691	S.RES ERA3YED 101V (100)	T	79.5/41.9
R4229	7030003860	S.RES ERJ3GE JPW V	B	73/54.4
R4230	7030009591	S.RES ERA3YED 472V (4.7K)	B	65.3/41.7
R4231	7030003320	S.RES ERJ3GEYJ 101 V (100)	T	84.1/72.5
R4232	7030003680	S.RES ERJ3GEYJ 104 V (100K)	T	80.7/71.8
R4233	7030003570	S.RES ERJ3GEYJ 123 V (12K)	T	78.8/72.7
R4234	7030003440	S.RES ERJ3GEYJ 102 V (1K)	B	84.5/72
R4235	7030003320	S.RES ERJ3GEYJ 101 V (100)	B	81.2/79.5
R4236	7030003320	S.RES ERJ3GEYJ 101 V (100)	B	80.4/66.3
R4241	7030003450	S.RES ERJ3GEYJ 122 V (1.2K)	B	71.1/72.4
R4242	7030003480	S.RES ERJ3GEYJ 222 V (2.2K)	T	71.9/76.1
R4301	7030003320	S.RES ERJ3GEYJ 101 V (100)	T	60.1/36.3
R4302	7410001090	S.ARR EXB-V8V 101JV	T	60.2/39
R4303	7410001090	S.ARR EXB-V8V 101JV	T	72.2/62.9
R4401	7030003320	S.RES ERJ3GEYJ 101 V (100)	B	83.5/29.7
R4402	7030003320	S.RES ERJ3GEYJ 101 V (100)	B	83/36.6
R4403	7030003490	S.RES ERJ3GEYJ 272 V (2.7K)	T	94.5/59.7
R4404	7030003480	S.RES ERJ3GEYJ 222 V (2.2K)	T	91.9/59.7
R4405	7030003320	S.RES ERJ3GEYJ 101 V (100)	B	85.4/56.9
R4406	7030009591	S.RES ERA3YED 472V (4.7K)	T	74.7/28.4
R4407	7030009591	S.RES ERA3YED 472V (4.7K)	T	74.7/29.7
R4408	7030009591	S.RES ERA3YED 472V (4.7K)	T	74.7/31.1
R4409	7030005341	S.RES ERA3YED 332V (3.3K)	T	76.5/35.4
R4410	7030005341	S.RES ERA3YED 332V (3.3K)	T	76.5/36.8
R4411	7030005341	S.RES ERA3YED 332V (3.3K)	T	79.3/38.1
R4412	7030003680	S.RES ERJ3GEYJ 104 V (100K)	T	90/60.4
R4413	7030009591	S.RES ERA3YED 472V (4.7K)	T	79/26.7
R4414	7030009961	S.RES ERA3YED 221V (220)	T	79/27.9
R4415	7030009961	S.RES ERA3YED 221V (220)	T	77.5/31.1
R4416	7030005341	S.RES ERA3YED 332V (3.3K)	T	79.3/35.4
R4417	7030009861	S.RES ERA3YED 471V (470)	T	76.5/34
R4418	7030009861	S.RES ERA3YED 471V (470)	T	76.5/38.1
R4419	7030003560	S.RES ERJ3GEYJ 103 V (10K)	T	81.6/60.8
R4420	7030003460	S.RES ERJ3GEYJ 152 V (1.5K)	T	84.5/56.6
R4421	7030003650	S.RES ERJ3GEYJ 563 V (56K)	B	84.4/63.2
R4422	7030003470	S.RES ERJ3GEYJ 182 V (1.8K)	T	85.8/59.3
R4423	7030003500	S.RES ERJ3GEYJ 332 V (3.3K)	T	89.7/57.1
R4424	7030003480	S.RES ERJ3GEYJ 222 V (2.2K)	T	87.7/56.6
R4425	7030003860	S.RES ERJ3GE JPW V	T	82.4/29.9
R4426	7030003340	S.RES ERJ3GEYJ 151 V (150)	T	87.8/63.8
R4428	7030003380	S.RES ERJ3GEYJ 331 V (330)	T	89.7/55.8
R4430	7030003320	S.RES ERJ3GEYJ 101 V (100)	B	97/59.6
R4501	7030003320	S.RES ERJ3GEYJ 101 V (100)	B	62.8/88.5
R4502	7030003200	S.RES ERJ3GEYJ 100 V (10)	T	67.3/83.6
R4503	7030003320	S.RES ERJ3GEYJ 101 V (100)	B	69.8/84.4
R4504	7030003320	S.RES ERJ3GEYJ 101 V (100)	B	70.4/87.1
R4505	7030003680	S.RES ERJ3GEYJ 104 V (100K)	T	67.3/88.7
R4506	7030003320	S.RES ERJ3GEYJ 101 V (100)	T	69.3/91.3
R4507	7030003320	S.RES ERJ3GEYJ 101 V (100)	T	66.4/90.5
R5001	7410000720	S.ARR EXB-V8V 473JV (47K)	T	27.7/13.3
R5002	7410000720	S.ARR EXB-V8V 473JV (47K)	T	25.4/9.1
R5003	7030003860	S.RES ERJ3GE JPW V	B	46.7/33.3
R5005	7030003860	S.RES ERJ3GE JPW V	B	55.6/30.2
R5006	7410000720	S.ARR EXB-V8V 473JV (47K)	T	54.1/10.8
R5007	7030003860	S.RES ERJ3GE JPW V	B	55.7/32.4
R5008	7410000720	S.ARR EXB-V8V 473JV (47K)	T	18.6/9.1
R5009	7030003640	S.RES ERJ3GEYJ 473 V (47K)	T	14.7/9.2
R5010	7030003640	S.RES ERJ3GEYJ 473 V (47K)	T	62/13.1
R5011	7030003720	S.RES ERJ3GEYJ 224 V (220K)	B	51.1/26
R5012	7030003860	S.RES ERJ3GE JPW V	B	54.7/28.7
R5013	7030003860	S.RES ERJ3GE JPW V	T	50.7/10.3
R5101	7410000720	S.ARR EXB-V8V 473JV (47K)	T	28.2/48.6
R5102	7030003640	S.RES ERJ3GEYJ 473 V (47K)	T	24.2/48.6
R5103	7410000720	S.ARR EXB-V8V 473JV (47K)	T	37/52.7
R5104	7410000720	S.ARR EXB-V8V 473JV (47K)	T	37.1/48.5
R5105	7410000720	S.ARR EXB-V8V 473JV (47K)	T	32.7/44.6
R5401	7410001100	S.ARR EXB-V8V 472JV (4.7K)	T	14.4/37.1
R5402	7410001100	S.ARR EXB-V8V 472JV (4.7K)	T	42.9/84.7

M.=Mounted side (T: Mounted on the Top side, B: Mounted on the Bottom side)
S.=Surface mount

[MAIN UNIT]

REF NO.	PARTS NO.	DESCRIPTION	M.	H/V LOCATION
R6001	7030003700	S.RES ERJ3GEYJ 154 V (150K)	T	144.2/111.3
R6002	7030003680	S.RES ERJ3GEYJ 104 V (100K)	T	149.4/109.8
R6003	7030003690	S.RES ERJ3GEYJ 124 V (120K)	T	146.5/112.5
R6004	7030003690	S.RES ERJ3GEYJ 124 V (120K)	T	148.5/112.1
R6005	7030003680	S.RES ERJ3GEYJ 104 V (100K)	T	152.1/111
R6006	7030003340	S.RES ERJ3GEYJ 151 V (150)	B	76.7/95.4
R6007	7030003260	S.RES ERJ3GEYJ 330 V (33)	B	73.9/96.1
R6008	7030003200	S.RES ERJ3GEYJ 100 V (10)	T	72.4/110.7
R6009	7030003340	S.RES ERJ3GEYJ 151 V (150)	B	71.2/95
R6010	7030003320	S.RES ERJ3GEYJ 101 V (100)	B	70.7/98.1
R6011	7030003680	S.RES ERJ3GEYJ 104 V (100K)	T	71.6/104.7
R6012	7030003360	S.RES ERJ3GEYJ 221 V (220)	T	159.4/115.3
R6013	7030003360	S.RES ERJ3GEYJ 221 V (220)	T	72.1/102.8
R6014	7030010520	S.RES ERJ1TYJ 101U (100)	B	113.4/95.8
R6015	7410001090	S.ARR EXB-V8V 101JV	T	81.9/101.7
R6016	7030003340	S.RES ERJ3GEYJ 151 V (150)	B	72.4/110.1
R6018	7030003540	S.RES ERJ3GEYJ 682 V (6.8K)	T	86/131.6
R6019	7030003860	S.RES ERJ3GE JPW V	T	70.3/125.5
R6020	7030003480	S.RES ERJ3GEYJ 222 V (2.2K)	B	158/118
R6021	7030003520	S.RES ERJ3GEYJ 472 V (4.7K)	T	78.3/102.1
R6023	7030003560	S.RES ERJ3GEYJ 103 V (10K)	T	77.8/134.2
R6024	7030003560	S.RES ERJ3GEYJ 103 V (10K)	T	76.5/134.2
R6025	7030003440	S.RES ERJ3GEYJ 102 V (1K)	B	155.3/118.7
R6026	7030003460	S.RES ERJ3GEYJ 152 V (1.5K)	B	152.6/118
R6028	7030003400	S.RES ERJ3GEYJ 471 V (470)	T	74.8/105.5
R6029	7030003400	S.RES ERJ3GEYJ 471 V (470)	T	74.3/107.4
R6031	7030003440	S.RES ERJ3GEYJ 102 V (1K)	T	106/81.7
R6032	7030003320	S.RES ERJ3GEYJ 101 V (100)	B	101.6/91
R6033	7030003860	S.RES ERJ3GE JPW V	B	85.8/94.5
R6034	7030003440	S.RES ERJ3GEYJ 102 V (1K)	T	150.9/117.1
R6035	7410001090	S.ARR EXB-V8V 101JV	T	82.4/122.3
R6036	7030003440	S.RES ERJ3GEYJ 102 V (1K)	T	103.2/80.4
R6037	7030003560	S.RES ERJ3GEYJ 103 V (10K)	T	101.9/84.7
R6038	7030003580	S.RES ERJ3GEYJ 153 V (15K)	T	148.8/116.5
R6040	7030003560	S.RES ERJ3GEYJ 103 V (10K)	T	101.9/83.4
R6041	7030003610	S.RES ERJ3GEYJ 273 V (27K)	T	83.7/109.7
R6042	7030003730	S.RES ERJ3GEYJ 274 V (270K)	B	104.7/86.2
R6043	7310005400	S.TRI EVM-3VSX50 BE4 (223)	T	146.4/116.2
R6044	7030003570	S.RES ERJ3GEYJ 123 V (12K)	B	86.7/109
R6045	7030003280	S.RES ERJ3GEYJ 470 V (47)	T	77.4/112.4
R6046	7030003380	S.RES ERJ3GEYJ 331 V (330)	B	101/97.2
R6047	7030003440	S.RES ERJ3GEYJ 102 V (1K)	T	95.3/86.2
R6048	7030003220	S.RES ERJ3GEYJ 150 V (15)	B	101.7/101.5
R6049	7030003370	S.RES ERJ3GEYJ 271 V (270)	B	81.8/113.5
R6050	7030003380	S.RES ERJ3GEYJ 331 V (330)	B	101/103.6
R6051	7030003230	S.RES ERJ3GEYJ 180 V (18)	B	83.9/113.7
R6052	7030003370	S.RES ERJ3GEYJ 271 V (270)	B	86.7/114.2
R6053	7030003440	S.RES ERJ3GEYJ 102 V (1K)	T	94.6/84.2
R6054	7410001090	S.ARR EXB-V8V 101JV	T	87/75.6
R6055	7030003370	S.RES ERJ3GEYJ 271 V (270)	B	98.3/125.8
R6056	7030003290	S.RES ERJ3GEYJ 560 V (56)	B	139.6/116.8
R6057	7030003230	S.RES ERJ3GEYJ 180 V (18)	B	100.4/124.1
R6058	7030003520	S.RES ERJ3GEYJ 472 V (4.7K)	T	97/81.7
R6059	7030003280	S.RES ERJ3GEYJ 470 V (47)	T	111.6/100
R6060	7030003520	S.RES ERJ3GEYJ 472 V (4.7K)	T	95.1/77.9
R6061	7030003320	S.RES ERJ3GEYJ 101 V (100)	B	135.3/111.3
R6062	7030003640	S.RES ERJ3GEYJ 473 V (47K)	T	110.3/102.8
R6063	7030003320	S.RES ERJ3GEYJ 101 V (100)	T	88.6/133.4
R6064	7030003370	S.RES ERJ3GEYJ 271 V (270)	B	101.1/126.8
R6065	7030003440	S.RES ERJ3GEYJ 102 V (1K)	T	138.8/110.3
R6066	7030003500	S.RES ERJ3GEYJ 332 V (3.3K)	T	130.2/110.1
R6067	7030003550	S.RES ERJ3GEYJ 822 V (8.2K)	T	90.6/131
R6068	7030003480	S.RES ERJ3GEYJ 222 V (2.2K)	T	92.7/129.9
R6069	7030003560	S.RES ERJ3GEYJ 103 V (10K)	T	98.5/84.2
R6070	7030003560	S.RES ERJ3GEYJ 103 V (10K)	B	112.4/100.6
R6071	7310005410	S.TRI EVM-3VSX50 BQ4 (473)	T	98.3/77.4
R6072	7030003320	S.RES ERJ3GEYJ 101 V (100)	T	97.2/135.3
R6073	7030003560	S.RES ERJ3GEYJ 103 V (10K)	T	87.1/80.4
R6074	7030003320	S.RES ERJ3GEYJ 101 V (100)	T	80.7/79.5
R6075	7030009591	S.RES ERA3YED 472V (4.7K)	T	80.6/80.9
R6076	7030009591	S.RES ERA3YED 472V (4.7K)	T	84.4/79.1
R6077	7030003630	S.RES ERJ3GEYJ 393 V (39K)	T	89.9/78.6
R6079	7030003280	S.RES ERJ3GEYJ 470 V (47)	T	112.9/100
R6081	7030003570	S.RES ERJ3GEYJ 123 V (12K)	T	89.9/80.4
R6082	7030003330	S.RES ERJ3GEYJ 121 V (120)	B	110.7/126.3
R6083	7030003220	S.RES ERJ3GEYJ 150 V (15)	B	84.4/82.1
R6085	7030003430	S.RES ERJ3GEYJ 821 V (820)	T	113.8/106.3
R6086	7030003290	S.RES ERJ3GEYJ 560 V (56)	B	111.4/128.7
R6087	7030003430	S.RES ERJ3GEYJ 821 V (820)	T	113.8/107.6
R6088	7030003330	S.RES ERJ3GEYJ 121 V (120)	B	109.1/129.4
R6089	7030003200	S.RES ERJ3GEYJ 100 V (10)	T	95.5/112.4
R6090	7030003370	S.RES ERJ3GEYJ 271 V (270)	B	115.2/115.1
R6091	7030003230	S.RES ERJ3GEYJ 180 V (18)	B	114.1/117.3
R6092	7030003370	S.RES ERJ3GEYJ 271 V (270)	B	113.3/115.2
R6093	7030003680	S.RES ERJ3GEYJ 104 V (100K)	T	90.4/110.9
R6094	7030003320	S.RES ERJ3GEYJ 101 V (100)	B	90.4/112.4
R6095	7030003200	S.RES ERJ3GEYJ 100 V (10)	T	95.5/109.8
R6096	7030003320	S.RES ERJ3GEYJ 101 V (100)	B	148.3/114.3
R6097	7030003560	S.RES ERJ3GEYJ 103 V (10K)	T	83.3/106.3
R6098	7030003320	S.RES ERJ3GEYJ 101 V (100)	B	95.7/103
R6099	7030003560	S.RES ERJ3GEYJ 103 V (10K)	T	95.5/107.1
R6103	7030003860	S.RES ERJ3GE JPW V	B	161.7/129.6
R6106	7030003430	S.RES ERJ3GEYJ 821 V (820)	B	148.8/126.8
R6107	7030004030	S.RES ERJ3GEYJ 5R6 V (5.6)	B	151/129.1
R6108	7030003430	S.RES ERJ3GEYJ 821 V (820)	B	150.2/131.5
R6110	7030003860	S.RES ERJ3GE JPW V	B	137.6/120.2
R6113	7030003860	S.RES ERJ3GE JPW V	B	125/122.5
R6115	7030003430	S.RES ERJ3GEYJ 821 V (820)	B	162.5/112.7
R6116	7030004030	S.RES ERJ3GEYJ 5R6 V (5.6)	B	159.9/113.4
R6117	7030003430	S.RES ERJ3GEYJ 821 V (820)	B	162.7/114.6
R6120	7030003860	S.RES ERJ3GE JPW V	T	76.5/127.4
R6121	7030003480	S.RES ERJ3GEYJ 222 V (2.2K)	T	79.1/134.2
R6122	7030003860	S.RES ERJ3GE-JPW	T	77.3/119.3

[MAIN UNIT]

REF NO.	PARTS NO.	DESCRIPTION	M.	H/V LOCATION
C1001	4030011600	S.CER C1608 JB 1E 104K-T	T	28.3/105.4
C1002	4030006860	S.CER C1608 JB 1H 102K-T	B	13.8/93.8
C1003	4030006860	S.CER C1608 JB 1H 102K-T	B	16.7/95.1
C1004	4030006860	S.CER C1608 JB 1H 102K-T	B	13.8/96.4
C1005	4030006860	S.CER C1608 JB 1H 102K-T	B	16.7/97.7
C1006	4030006860	S.CER C1608 JB 1H 102K-T	B	13.8/99
C1007	4030006860	S.CER C1608 JB 1H 102K-T	B	16.7/100.3
C1008	4030006860	S.CER C1608 JB 1H 102K-T	B	13.8/101.6
C1009	4030006860	S.CER C1608 JB 1H 102K-T	B	16.7/102.9
C1010	4030006860	S.CER C1608 JB 1H 102K-T	B	13.8/104.2
C1011	4030006860	S.CER C1608 JB 1H 102K-T	B	16.7/106.9
C1012	4030006860	S.CER C1608 JB 1H 102K-T	B	13.8/108.1
C1013	4030006860	S.CER C1608 JB 1H 102K-T	B	16.6/109.5
C1014	4030006860	S.CER C1608 JB 1H 102K-T	T	28.4/104.1
C1015	4030006860	S.CER C1608 JB 1H 102K-T	T	28.3/106.7
C1016	4030006860	S.CER C1608 JB 1H 102K-T	T	28.3/108
C1017	4030006860	S.CER C1608 JB 1H 102K-T	T	28.3/109.3
C1018	4030006860	S.CER C1608 JB 1H 102K-T	T	28.3/110.6
C1019	4030006860	S.CER C1608 JB 1H 102K-T	T	28.3/111.9
C1020	4030006860	S.CER C1608 JB 1H 102K-T	T	28.3/113.2
C1021	4030006860	S.CER C1608 JB 1H 102K-T	B	13.8/110.7
C1051	4030006860	S.CER C1608 JB 1H 102K-T	T	31.1/117.8
C1052	4030006860	S.CER C1608 JB 1H 102K-T	T	31.1/116.5
C1053	4030006860	S.CER C1608 JB 1H 102K-T	T	31.1/115.2
C1054	4030006860	S.CER C1608 JB 1H 102K-T	T	31.1/113.9
C1055	4030006860	S.CER C1608 JB 1H 102K-T	T	31.1/112.6
C1056	4030006860	S.CER C1608 JB 1H 102K-T	T	31.1/111.3
C1057	4030006860	S.CER C1608 JB 1H 102K-T	T	31.1/110
C1058	4030006860	S.CER C1608 JB 1H 102K-T	T	31.1/108.7
C1059	4030006860	S.CER C1608 JB 1H 102K-T	T	31.1/107.4
C1060	4030006860	S.CER C1608 JB 1H 102K-T	T	31.1/106.1
C1061	4030006860	S.CER C1608 JB 1H 102K-T	T	31.1/104.8
C1062	4030006860	S.CER C1608 JB 1H 102K-T	T	31.1/103.5
C1063	4030006860	S.CER C1608 JB 1H 102K-T	T	30.3/102.2
C1064	4030006860	S.CER C1608 JB 1H 102K-T	T	30.3/100.9
C1065	4030006860	S.CER C1608 JB 1H 102K-T	T	30.3/99.6
C1066	4030006860	S.CER C1608 JB 1H 102K-T	T	30.3/98.3
C1067	4030006860	S.CER C1608 JB 1H 102K-T	T	30/97
C1068	4030006860	S.CER C1608 JB 1H 102K-T	T	30.4/95.7
C1069	4030006860	S.CER C1608 JB 1H 102K-T	T	30.4/94.4
C1070	4030006860	S.CER C1608 JB 1H 102K-T	T	31.1/93.1
C1071	4030006860	S.CER C1608 JB 1H 102K-T	T	31.1/91.8
C1072	4030006860	S.CER C1608 JB 1H 102K-T	T	31.1/90.5
C1073	4030006860	S.CER C1608 JB 1H 102K-T	T	31.1/89.2
C1074	4030006860	S.CER C1608 JB 1H 102K-T	T	31.1/87.9
C1075	4030006860	S.CER C1608 JB 1H 102K-T	T	31.1/86.6
C1076	4030006860	S.CER C1608 JB 1H 102K-T	T	31.1/85.3
C1101	4030017490	S.CER C1608 JB 1A 105K-T	T	7.7/98.4
C1111	4030017490	S.CER C1608 JB 1A 105K-T	T	7.7/106
C1201	4030011600	S.CER C1608 JB 1E 104K-T	B	50.7/128.2
C1202	4030011600	S.CER C1608 JB 1E 104K-T	B	35.6/129.3
C1252	4030017490	S.CER C1608 JB 1A 105K-T	B	42.2/121.6
C1253	4030006900	S.CER C1608 JB 1H 103K-T	B	44.6/121.1
C1254	4030006900	S.CER C1608 JB 1H 103K-T	B	43.5/118
C1256	4030017490	S.CER C1608 JB 1A 105K-T	B	46.7/118
C1257	4030017490	S.CER C1608 JB 1A 105K-T	B	48.3/118.8
C1258	4030009530	S.CER C1608 CH 1H 030B-T	B	49/125.9
C1259	4030019500	S.CER GRM21BB31A106KE18 (GRM40 B)	T	55/114.1
C1260	4030011600	S.CER C1608 JB 1E 104K-T	T	60/113.2
C1301	4030011600	S.CER C1608 JB 1E 104K-T	B	15.8/124.5
C1302	4030011600	S.CER C1608 JB 1E 104K-T	B	17.5/137.8
C1303	4030019500	S.CER GRM21BB31A106KE18 (GRM40 B)	B	6.5/135.6
C1304	4030019500	S.CER GRM21BB31A106KE18 (GRM40 B)	B	27.6/138.9
C1305	4030006860	S.CER C1608 JB 1H 102K-T	B	23.6/127.4
C1401	4030011600	S.CER C1608 JB 1E 104K-T	T	57.3/99.5
C1402	4030011600	S.CER C1608 JB 1E 104K-T	T	61.8/99.5
C1403	4030017490	S.CER C1608 JB 1A 105K-T	T	41.5/123.6
C1404	4030011600	S.CER C1608 JB 1E 104K-T	B	56.8/90.4
C1405	4030011600	S.CER C1608 JB 1E 104K-T	B	56.8/102.2
C1407	4030017490	S.CER C1608 JB 1A 105K-T	T	170.9/132.9
C1409	4030011600	S.CER C1608 JB 1E 104K-T	T	61.9/101.4
C1410	4030006860	S.CER C1608 JB 1H 102K-T	T	64.5/95.6
C1601	4030011600	S.CER C1608 JB 1E 104K-T	T	1.8/111.3
C1901	4030006900	S.CER C1608 JB 1H 103K-T	T	154.6/146.4
C1902	4030011340	S.CER C1608 CH 1H 471J-T	T	152.7/142.9
C1903	4030011340	S.CER C1608 CH 1H 471J-T	T	151.3/142.9
C2001	4030006900	S.CER C1608 JB 1H 103K-T	T	174.5/122.8
C2002	4030006900	S.CER C1608 JB 1H 103K-T	T	174.5/126.3
C2003	4030006900	S.CER C1608 JB 1H 103K-T	T	174.5/114.9
C2004	4030006860	S.CER C1608 JB 1H 102K-T	T	174.5/132.5
C2005	4030006900	S.CER C1608 JB 1H 103K-T	T	174.5/120.2
C2006	4030006900	S.CER C1608 JB 1H 103K-T	T	174.5/124.1
C2007	4030006900	S.CER C1608 JB 1H 103K-T	T	174.5/118
C2008	4030006900	S.CER C1608 JB 1H 103K-T	T	174.5/129.4
C2009	4030006900	S.CER C1608 JB 1H 103K-T	T	174.5/135.6
C2010	4030006900	S.CER C1608 JB 1H 103K-T	T	174.5/138.7
C2011	4030019090	S.CER C2012 JB 1C 225M-T	T	172.3/77.8
C2012	4030019090	S.CER C2012 JB 1C 225M-T	B	171.5/85.9
C2013	4030018620	S.CER C1608 CH 1H 222J-T	B	166.7/73
C2014	4030019500	S.CER GRM21BB31A106KE18 (GRM40 B)	B	175.3/82
C2015	4510009910	S.ELE 16 CE 10 LH	T	168.7/70.9
C2016	4030006860	S.CER C1608 JB 1H 102K-T	B	179.7/81.7
C2031	4030006900	S.CER C1608 JB 1H 103K-T	T	170.2/148.1
C2041	4030006900	S.CER C1608 JB 1H 103K-T	T	177.9/145.4
C2042	4030006900	S.CER C1608 JB 1H 103K-T	T	188.2/148.1
C2051	4030006900	S.CER C1608 JB 1H 103K-T	T	163.2/148.1
C2062	4510009910	S.ELE 16 CE 10 LH	T	173.5/70.9
C2063	4510009910	S.ELE 16 CE 10 LH	T	181.3/72.4
C2101	4030006900	S.CER C1608 JB 1H 103K-T	T	156/32.4
C2102	4030007040	S.CER C1608 CH 1H 180J-T	T	158.2/27.3

M.=Mounted side (T: Mounted on the Top side, B: Mounted on the Bottom side)
S.=Surface mount

[MAIN UNIT]

REF NO.	PARTS NO.	DESCRIPTION	M.	H/V LOCATION
C2103	4030007040	S.CER C1608 CH 1H 180J-T	T	160.9/28.6
C2104	4030011600	S.CER C1608 JB 1E 104K-T	T	158.5/29.7
C2105	4030011600	S.CER C1608 JB 1E 104K-T	T	155.3/40
C2106	4030019500	S.CER GRM21BB31A106KE18 (GRM40 B)	T	163/28.8
C2107	4030011600	S.CER C1608 JB 1E 104K-T	T	165.3/29.8
C2108	4030011600	S.CER C1608 JB 1E 104K-T	T	167.6/29.9
C2109	4030011600	S.CER C1608 JB 1E 104K-T	T	168.9/35.5
C2110	4030019500	S.CER GRM21BB31A106KE18 (GRM40 B)	T	156.8/39.3
C2111	4030011600	S.CER C1608 JB 1E 104K-T	T	178.7/33.4
C2112	4030011600	S.CER C1608 JB 1E 104K-T	T	178.7/27.7
C2113	4030011600	S.CER C1608 JB 1E 104K-T	T	164.2/40.1
C2114	4030017490	S.CER C1608 JB 1A 105K-T	T	175.6/31.6
C2115	4030017490	S.CER C1608 JB 1A 105K-T	T	176/25.6
C2116	4030011330	S.CER C1608 CH 1H 391J-T	B	180.8/72.8
C2117	4030006860	S.CER C1608 JB 1H 102K-T	B	169.2/69.6
C2118	4030019500	S.CER GRM21BB31A106KE18 (GRM40 B)	T	154.3/54.1
C2119	4030019500	S.CER GRM21BB31A106KE18 (GRM40 B)	T	160.9/61.5
C2120	4030019500	S.CER GRM21BB31A106KE18 (GRM40 B)	T	158.1/31.9
C2121	4030019500	S.CER GRM21BB31A106KE18 (GRM40 B)	T	171.4/41.5
C2122	4030017490	S.CER C1608 JB 1A 105K-T	T	173/38.7
C2123	4030017490	S.CER C1608 JB 1A 105K-T	T	173.8/37.4
C2124	4030011600	S.CER C1608 JB 1E 104K-T	T	173/40
C2131	4030019500	S.CER GRM21BB31A106KE18 (GRM40 B)	T	177.5/55.7
C2132	4550007480	S.TAN F930J106MAABMA	B	171.9/56.8
C2133	4030019500	S.CER GRM21BB31A106KE18 (GRM40 B)	T	155.2/47.6
C2134	4030011600	S.CER C1608 JB 1E 104K-T	T	158.1/47.5
C2135	4030011600	S.CER C1608 JB 1E 104K-T	T	172.5/58.8
C2137	4550007230	S.TAN F930J475MAABMA	B	171.9/49.5
C2138	4030019500	S.CER GRM21BB31A106KE18 (GRM40 B)	T	165.9/46.7
C2139	4030019500	S.CER GRM21BB31A106KE18 (GRM40 B)	T	164.1/46.7
C2140	4030011600	S.CER C1608 JB 1E 104K-T	T	162.6/47.1
C2141	4030011600	S.CER C1608 JB 1E 104K-T	T	166.5/54
C2142	4030019500	S.CER GRM21BB31A106KE18 (GRM40 B)	T	168.1/53.9
C2143	4030007040	S.CER C1608 CH 1H 180J-T	T	161/58.7
C2144	4030007040	S.CER C1608 CH 1H 180J-T	T	161/60
C2145	4550007480	S.TAN F930J106MAABMA	T	167.4/59.7
C2146	4550007230	S.TAN F930J475MAABMA	B	171.9/52.3
C2201	4030007010	S.CER C1608 CH 1H 100D-T	T	191.7/40.4
C2202	4030011600	S.CER C1608 JB 1E 104K-T	B	185/54.2
C2203	4030011600	S.CER C1608 JB 1E 104K-T	B	187.1/35.4
C2300	4030006860	S.CER C1608 JB 1H 102K-T	B	96.5/12
C2301	4030006900	S.CER C1608 JB 1H 103K-T	B	146.4/5.3
C2302	4030006900	S.CER C1608 JB 1H 103K-T	T	148.4/5.8
C2303	4030006900	S.CER C1608 JB 1H 103K-T	B	140.2/5.3
C2304	4030006900	S.CER C1608 JB 1H 103K-T	T	142.4/5.7
C2305	4510009920	S.ELE 16 CE 100 LH	T	28/78.4
C2306	4030011600	S.CER C1608 JB 1E 104K-T	B	10.5/69.2
C2307	4030011340	S.CER C1608 CH 1H 471J-T	B	180.8/13
C2309	4030019500	S.CER GRM21BB31A106KE18 (GRM40 B)	T	90.2/4
C2310	4510009930	S.ELE 10 CE 10 FN	T	96.4/28.3
C2311	4030011600	S.CER C1608 JB 1E 104K-T	T	106.7/4.6
C2312	4510009370	ELE 16 ME 470 CZ		
C2313	4510009390	ELE 16 ME 2200 CZ		
C2314	4340000260	S.MYL ECPU1C104MA5	B	111.3/4.7
C2315	4030011600	S.CER C1608 JB 1E 104K-T	B	102.2/8.3
C2316	4030018580	S.CER C1608 CH 1H 821J-T	B	100.9/13.7
C2317	4510009370	ELE 16 ME 470 CZ		
C2318	4030018620	S.CER C1608 CH 1H 222J-T	B	114.4/4.6
C2319	4550003220	S.TAN TEESVA 1E 105M8R	B	114.1/12.9
C2321	4030008950	S.CER C2012 JB 1C 823K-T	B	111.4/13.2
C2322	4030018640	S.CER C2012 CH 1H 103J-T	B	108.9/11.5
C2323	4030017490	S.CER C1608 JB 1A 105K-T	B	104.1/13.7
C2325	4550002890	S.TAN TEESVA 1A 225M8R	B	111.4/19.2
C2326	4030019500	S.CER GRM21BB31A106KE18 (GRM40 B)	T	96.4/16.1
C2327	4510009910	S.ELE 16 CE 10 LH	T	96.4/23.5
C2328	4030011600	S.CER C1608 JB 1E 104K-T	T	109.3/18.4
C2331	4030019500	S.CER GRM21BB31A106KE18 (GRM40 B)	B	90.9/12.2
C2333	4030017490	S.CER C1608 JB 1A 105K-T	T	87.6/8.7
C2334	4550007480	S.TAN F930J106MAABMA	T	94.3/17
C2335	4030019500	S.CER GRM21BB31A106KE18 (GRM40 B)	T	92/4
C2336	4030011600	S.CER C1608 JB 1E 104K-T	B	93.9/10
C2351	4030018620	S.CER C1608 CH 1H 222J-T	B	91.8/20.5
C2352	4550007480	S.TAN F930J106MAABMA	B	94.3/28
C2361	4030017810	S.CER C1608 CH 1H 102J-T	B	100.8/25.5
C2362	4510009930	S.ELE 10 CE 10 FN	T	105.7/29.6
C2363	4030011600	S.CER C1608 JB 1E 104K-T	T	106.3/25.7
C2364	4030011600	S.CER C1608 JB 1E 104K-T	T	97.4/18.3
C2401	4030006900	S.CER C1608 JB 1H 103K-T	B	190.6/80.2
C2402	4030011340	S.CER C1608 CH 1H 471J-T	B	188.6/80.2
C2501	4030006900	S.CER C1608 JB 1H 103K-T	B	175.1/96.5
C2502	4030011340	S.CER C1608 CH 1H 471J-T	B	175.8/94.9
C2601	4550003220	S.TAN TEESVA 1E 105M8R	B	4/61.3
C2602	4030019500	S.CER GRM21BB31A106KE18 (GRM40 B)	T	13.6/67
C2603	4030017490	S.CER C1608 JB 1A 105K-T	T	17.9/62.6
C2604	4030017490	S.CER C1608 JB 1A 105K-T	T	17.9/64.2
C2605	4030007120	S.CER C1608 CH 1H 820J-T	T	4.7/62.8
C2606	4030019500	S.CER GRM21BB31A106KE18 (GRM40 B)	T	4.8/65.7

[MAIN UNIT]

REF NO.	PARTS NO.	DESCRIPTION	M.	H/V LOCATION
C2607	4030019500	S.CER GRM21BB31A106KE18 (GRM40 B)	T	6.6/66.2
C3001	4030006900	S.CER C1608 JB 1H 103K-T	B	143.1/30.2
C3002	4030006900	S.CER C1608 JB 1H 103K-T	B	143.1/38.6
C3003	4030017810	S.CER C1608 CH 1H 102J-T	B	147.1/36.6
C3004	4030011600	S.CER C1608 JB 1E 104K-T	T	140.6/41
C3005	4030009530	S.CER C1608 CH 1H 030B-T	T	142.8/43.8
C3006	4610001970	S.TRI TZC3P200A110R00 (TZC03P200A1102)	T	145.2/46.6
C3007	4030017810	S.CER C1608 CH 1H 102J-T	B	146.1/46.2
C3008	4030017810	S.CER C1608 CH 1H 102J-T	B	144.2/46.9
C3009	4030011600	S.CER C1608 JB 1E 104K-T	T	86.9/20.2
C3010	4030019500	S.CER GRM21BB31A106KE18 (GRM40 B)	T	86.2/28.8
C3012	4030011600	S.CER C1608 JB 1E 104K-T	T	89.6/24
C3201	4030017870	S.CER C1608 CH 1H 681J-T	B	118.3/39.6
C3202	4030011600	S.CER C1608 JB 1E 104K-T	B	116.1/43.6
C3203	4510009920	S.ELE 16 CE 100 LH	T	119/44.3
C3204	4030007160	S.CER C1608 CH 1H 181J-T	B	118.2/47.5
C3205	4030009350	S.CER C1608 CH 1H 3R5B-T	B	117.4/49.1
C3206	4030017870	S.CER C1608 CH 1H 681J-T	B	117.4/55.5
C3207	4030011330	S.CER C1608 CH 1H 391J-T	B	118.2/53.9
C3208	4030011600	S.CER C1608 JB 1E 104K-T	T	119.8/48.5
C3209	4030011600	S.CER C1608 JB 1E 104K-T	T	126.8/41.8
C3210	4510009920	S.ELE 16 CE 100 LH	T	132.1/43.4
C3211	4510009920	S.ELE 16 CE 100 LH	T	119/61.1
C3212	4030011600	S.CER C1608 JB 1E 104K-T	T	119.8/65.3
C3213	4030011600	S.CER C1608 JB 1E 104K-T	T	128.7/65.3
C3214	4510009920	S.ELE 16 CE 100 LH	T	129.5/61.1
C3215	4030007170	S.CER C1608 CH 1H 221J-T	B	118.4/60
C3216	4030011600	S.CER C1608 JB 1E 104K-T	T	118.4/70.5
C3217	4510009910	S.ELE 16 CE 10 LH	T	121.5/68.9
C3218	4030018800	S.CER C3216 CH 1H 223J-T	B	119.5/68.6
C3219	4030007170	S.CER C1608 CH 1H 221J-T	B	129.1/59.9
C3220	4030018800	S.CER C3216 CH 1H 223J-T	B	125.2/66.6
C3221	4030010760	S.CER C1608 CH 1H 331J-T	T	122.3/74.7
C3222	4030017490	S.CER C1608 JB 1A 105K-T	T	122.3/77.7
C3223	4030006900	S.CER C1608 JB 1H 103K-T	T	123.6/77.7
C3224	4030007010	S.CER C1608 CH 1H 100D-T	T	118.4/77.7
C3225	4550003220	S.TAN TEESVA 1E 105M8R	B	122.1/76
C3226	4030018640	S.CER C2012 CH 1H 103J-T	B	145.5/62.7
C3227	4030010760	S.CER C1608 CH 1H 331J-T	T	128.8/74.7
C3228	4030017490	S.CER C1608 JB 1A 105K-T	T	128.8/77.7
C3229	4030006900	S.CER C1608 JB 1H 103K-T	T	130.1/77.7
C3230	4030007010	S.CER C1608 CH 1H 100D-T	T	123.6/74.7
C3231	4550003220	S.TAN TEESVA 1E 105M8R	B	129.4/73.6
C3232	4030018640	S.CER C2012 CH 1H 103J-T	B	137.7/65.9
C3233	4510009920	S.ELE 16 CE 100 LH	T	118.3/54
C3234	4030011600	S.CER C1608 JB 1E 104K-T	T	119.8/49.8
C3235	4030011600	S.CER C1608 JB 1E 104K-T	T	126.8/45
C3236	4510009920	S.ELE 16 CE 100 LH	T	129.5/50.5
C3237	4030009920	S.CER C1608 CH 1H 050B-T	B	151/69.4
C3239	4030009920	S.CER C1608 CH 1H 050B-T	B	151/71
C3301	4030006900	S.CER C1608 JB 1H 103K-T	B	131/38.5
C3302	4510009920	S.ELE 16 CE 100 LH	T	117.5/36.5
C3303	4030011600	S.CER C1608 JB 1E 104K-T	T	121.7/35.7
C3304	4030011600	S.CER C1608 JB 1E 104K-T	T	123.5/33.3
C3305	4510009920	S.ELE 16 CE 100 LH	T	120/28.7
C3306	4030011600	S.CER C1608 JB 1E 104K-T	B	132.8/35.8
C3307	4030011600	S.CER C1608 JB 1E 104K-T	B	128.7/25.2
C3401	4030017810	S.CER C1608 CH 1H 102J-T	T	106/44.4
C3403	4030018590	S.CER C1608 CH 1H 122J-T	B	94.9/36.7
C3404	4030018600	S.CER C1608 CH 1H 152J-T	B	99/33.9
C3405	4030018620	S.CER C1608 CH 1H 222J-T	B	110.5/34.1
C3406	4030007140	S.CER C1608 CH 1H 121J-T	B	97.7/33.9
C3407	4030011330	S.CER C1608 CH 1H 391J-T	B	99/39.7
C3408	4030018620	S.CER C1608 CH 1H 222J-T	B	109.2/34.1
C3409	4030011280	S.CER C1608 CH 1H 271J-T	B	110.5/38.4
C3410	4030011600	S.CER C1608 JB 1E 104K-T	T	107.3/44.4
C3411	4030019500	S.CER GRM21BB31A106KE18 (GRM40 B)	T	104.4/47.6
C3412	4030011600	S.CER C1608 JB 1E 104K-T	T	106/47.3
C3413	4030011600	S.CER C1608 JB 1E 104K-T	T	108.6/44.4
C3414	4510009920	S.ELE 16 CE 100 LH	T	98/35.5
C3415	4030011600	S.CER C1608 JB 1E 104K-T	T	102.2/36.9
C3416	4030011600	S.CER C1608 JB 1E 104K-T	T	105.8/37
C3417	4510009920	S.ELE 16 CE 100 LH	T	110.1/35.5
C3418	4030011600	S.CER C1608 JB 1E 104K-T	T	106/50.1
C3501	4030011600	S.CER C1608 JB 1E 104K-T	B	109.4/52.7
C3502	4030011600	S.CER C1608 JB 1E 104K-T	T	105.4/52.4
C3503	4030019500	S.CER GRM21BB31A106KE18 (GRM40 B)	B	102.3/50.3
C3504	4030006900	S.CER C1608 JB 1H 103K-T	T	111.8/52.4
C3505	4030006900	S.CER C1608 JB 1H 103K-T	T	108.6/57.6
C3506	4030011600	S.CER C1608 JB 1E 104K-T	T	105.4/57.6
C3507	4030011600	S.CER C1608 JB 1E 104K-T	T	111.3/75.4
C3509	4030011600	S.CER C1608 JB 1E 104K-T	T	105.4/55
C3510	4030011600	S.CER C1608 JB 1E 104K-T	T	111.3/78.2
C3513	4030006900	S.CER C1608 JB 1H 103K-T	B	115/81.8
C3515	4030011600	S.CER C1608 JB 1E 104K-T	B	110/58.9
C3516	4030006900	S.CER C1608 JB 1H 103K-T	B	110.7/81.4
C3517	4030011600	S.CER C1608 JB 1E 104K-T	B	112.8/81.4
C3518	4030011600	S.CER C1608 JB 1E 104K-T	T	111.7/85.9
C3519	4030019500	S.CER GRM21BB31A106KE18 (GRM40 B)	T	111.9/87.4
C3520	4030011600	S.CER C1608 JB 1E 104K-T	B	111.9/86.5
C3522	4030006900	S.CER C1608 JB 1H 103K-T	T	106.2/75.4
C3601	4030011600	S.CER C1608 JB 1E 104K-T	B	165.8/77.1
C3602	4030011600	S.CER C1608 JB 1E 104K-T	B	160.8/70.9
C3603	4030006860	S.CER C1608 JB 1H 102K-T	B	160.8/72.7
C3604	4030006860	S.CER C1608 JB 1H 102K-T	B	156.4/77.7
C3605	4030007040	S.CER C1608 CH 1H 180J-T	B	157.6/71.9
C3606	4030006900	S.CER C1608 JB 1H 103K-T	B	155.1/82.4
C3607	4030006980	S.CER C1608 CH 1H 070D-T	B	156/84.6

M.=Mounted side (T: Mounted on the Top side, B: Mounted on the Bottom side)
S.=Surface mount

[MAIN UNIT]

REF NO.	PARTS NO.	DESCRIPTION	M.	H/V LOCATION
C3608	4030006900	S.CER C1608 JB 1H 103K-T	T	166.2/82.5
C3609	4030006900	S.CER C1608 JB 1H 103K-T	B	168.5/84.2
C3610	4030007010	S.CER C1608 CH 1H 100D-T	T	163/89.3
C3611	4030011600	S.CER C1608 JB 1E 104K-T	T	165/87.2
C3612	4030010750	S.CER C1608 CH 1H 201J-T	B	161.8/90.8
C3613	4030011600	S.CER C1608 JB 1E 104K-T	T	165/85.9
C3615	4030007150	S.CER C1608 CH 1H 151J-T	B	164.9/94.1
C3616	4030007120	S.CER C1608 CH 1H 820J-T	B	159.6/96
C3651	4030011600	S.CER C1608 JB 1E 104K-T	T	167.4/76.5
C3652	4030019090	S.CER C2012 JB 1C 225M-T	T	164.4/79.8
C3701	4030011340	S.CER C1608 CH 1H 471J-T	T	132.5/91
C3702	4030011600	S.CER C1608 JB 1E 104K-T	B	150.6/95.5
C3704	4030011600	S.CER C1608 JB 1E 104K-T	B	148.7/91.1
C3705	4030006900	S.CER C1608 JB 1H 103K-T	B	163.4/97.9
C3706	4030006900	S.CER C1608 JB 1H 103K-T	B	146.6/85.6
C3715	4030011600	S.CER C1608 JB 1E 104K-T	T	140.8/100.9
C3716	4030011600	S.CER C1608 JB 1E 104K-T	B	144.2/98.5
C3717	4030011600	S.CER C1608 JB 1E 104K-T	T	142.5/103.6
C3718	4030011600	S.CER C1608 JB 1E 104K-T	T	143.3/99.5
C4001	4510009910	S.ELE 16 CE 10 LH	T	89.5/28.4
C4002	4030011600	S.CER C1608 JB 1E 104K-T	B	83.6/22.6
C4003	4030011600	S.CER C1608 JB 1E 104K-T	B	83.5/12.5
C4004	4030011600	S.CER C1608 JB 1E 104K-T	B	84.3/20.6
C4005	4030019500	S.CER GRM21BB31A106KE18 (GRM40 B)	B	83.1/17.9
C4006	4030011600	S.CER C1608 JB 1E 104K-T	B	83.5/8.1
C4007	4030019500	S.CER GRM21BB31A106KE18 (GRM40 B)	B	83.8/6.3
C4008	4030011600	S.CER C1608 JB 1E 104K-T	T	79.2/16.5
C4009	4510009910	S.ELE 16 CE 10 LH	T	88.5/17
C4010	4030011600	S.CER C1608 JB 1E 104K-T	B	83.5/9.7
C4011	4030011600	S.CER C1608 JB 1E 104K-T	T	80.4/10.7
C4012	4030017870	S.CER C1608 CH 1H 681J-T	T	75.8/11.7
C4013	4030017870	S.CER C1608 CH 1H 681J-T	T	76.6/13.7
C4014	4030007080	S.CER C1608 CH 1H 390J-T	T	75.6/24.4
C4015	4030006900	S.CER C1608 JB 1H 103K-T	T	66.8/9.5
C4016	4030018620	S.CER C1608 CH 1H 222J-T	T	73.2/14.5
C4017	4030018620	S.CER C1608 CH 1H 222J-T	T	73/22.4
C4018	4550007470	S.TAN F931A107MNMBMA	B	72.9/10.7
C4019	4550007470	S.TAN F931A107MNMBMA	B	72.9/26.2
C4020	4030011600	S.CER C1608 JB 1E 104K-T	T	73.8/17.6
C4021	4030011600	S.CER C1608 JB 1E 104K-T	T	73.1/19.8
C4022	4030011600	S.CER C1608 JB 1E 104K-T	T	69.2/26.1
C4023	4030011600	S.CER C1608 JB 1E 104K-T	T	70.3/13.3
C4024	4550007470	S.TAN F931A107MNMBMA	B	67.5/27.7
C4025	4030011600	S.CER C1608 JB 1E 104K-T	T	68.1/11.7
C4026	4030011600	S.CER C1608 JB 1E 104K-T	T	67.6/26.1
C4027	4550007470	S.TAN F931A107MNMBMA	B	67.5/13
C4028	4030011600	S.CER C1608 JB 1E 104K-T	T	59/20.3
C4029	4550007470	S.TAN F931A107MNMBMA	B	60.4/19.6
C4030	4030011600	S.CER C1608 JB 1E 104K-T	T	80.4/12.4
C4031	4030011600	S.CER C1608 JB 1E 104K-T	T	81.9/23.8
C4032	4030007090	S.CER C1608 CH 1H 470J-T	B	97/53.2
C4033	4030017490	S.CER C1608 JB 1A 105K-T	T	60.7/10.1
C4034	4030017490	S.CER C1608 JB 1A 105K-T	T	60.7/8.1
C4035	4030011600	S.CER C1608 JB 1E 104K-T	T	58.2/15.3
C4101	4550007480	S.TAN F930J106MAABMA	T	82.5/68.5
C4102	4550007480	S.TAN F930J106MAABMA	T	89.5/69.2
C4106	4030019500	S.CER GRM21BB31A106KE18 (GRM40 B)	B	84.1/74.5
C4107	4030019500	S.CER GRM21BB31A106KE18 (GRM40 B)	B	97.8/68
C4201	4510009910	S.ELE 16 CE 10 LH	T	73.3/54
C4202	4030011600	S.CER C1608 JB 1E 104K-T	B	65.4/47.6
C4203	4030011600	S.CER C1608 JB 1E 104K-T	B	77.3/56.6
C4205	4030019500	S.CER GRM21BB31A106KE18 (GRM40 B)	B	85.8/52.3
C4207	4030019500	S.CER GRM21BB31A106KE18 (GRM40 B)	B	74.4/39.4
C4209	4030019500	S.CER GRM21BB31A106KE18 (GRM40 B)	B	85.2/40.1
C4210	4510009910	S.ELE 16 CE 10 LH	T	68.5/54
C4211	4550007480	S.TAN F930J106MAABMA	T	73.2/48.1
C4212	4550007480	S.TAN F930J106MAABMA	T	67.9/48.1
C4213	4550007480	S.TAN F930J106MAABMA	T	80.5/48.1
C4214	4550007480	S.TAN F930J106MAABMA	T	82.9/44.3
C4215	4030011600	S.CER C1608 JB 1E 104K-T	B	73.4/48.4
C4216	4030011600	S.CER C1608 JB 1E 104K-T	B	65/45.5
C4217	4030011600	S.CER C1608 JB 1E 104K-T	B	76.7/48.4
C4218	4030011600	S.CER C1608 JB 1E 104K-T	B	83/48.4
C4219	4030017810	S.CER C1608 CH 1H 102J-T	T	73.2/45.7
C4220	4030017810	S.CER C1608 CH 1H 102J-T	T	68.8/45.7
C4221	4030017810	S.CER C1608 CH 1H 102J-T	T	77/44.7
C4222	4030017810	S.CER C1608 CH 1H 102J-T	T	79.5/44.7
C4223	4030018620	S.CER C1608 CH 1H 222J-T	T	71.3/43.5
C4224	4030018620	S.CER C1608 CH 1H 222J-T	T	74.1/40.4
C4225	4030011600	S.CER C1608 JB 1E 104K-T	B	79.9/48.4
C4226	4510009910	S.ELE 16 CE 10 LH	T	78.1/53.9
C4227	4030019500	S.CER GRM21BB31A106KE18 (GRM40 B)	B	64.3/39.4
C4228	4550007480	S.TAN F930J106MAABMA	T	88.4/72.5
C4229	4030007140	S.CER C1608 CH 1H 121J-T	T	80.6/73.5
C4231	4030019500	S.CER GRM21BB31A106KE18 (GRM40 B)	B	78.8/78.8
C4232	4030019500	S.CER GRM21BB31A106KE18 (GRM40 B)	B	80.6/68.2
C4236	4030006900	S.CER C1608 JB 1H 103K-T	T	95.2/63.2
C4237	4030007130	S.CER C1608 CH 1H 101J-T	T	80.6/74.7
C4301	4030019500	S.CER GRM21BB31A106KE18 (GRM40 B)	B	70.7/39.4
C4302	4030011600	S.CER C1608 JB 1E 104K-T	B	69.1/39.4
C4303	4030019500	S.CER GRM21BB31A106KE18 (GRM40 B)	T	64.3/44.6
C4304	4030011600	S.CER C1608 JB 1E 104K-T	T	65.8/44.4

[MAIN UNIT]

REF NO.	PARTS NO.	DESCRIPTION	M.	H/V LOCATION
C4305	4030019500	S.CER GRM21BB31A106KE18 (GRM40 B)	B	76.4/66.4
C4306	4030019500	S.CER GRM21BB31A106KE18 (GRM40 B)	T	83.3/63.8
C4307	4030011600	S.CER C1608 JB 1E 104K-T	T	67.6/30.8
C4308	4030017490	S.CER C1608 JB 1A 105K-T	T	67.6/32.1
C4310	4030019500	S.CER GRM21BB31A106KE18 (GRM40 B)	T	62.5/44.6
C4311	4030011600	S.CER C1608 JB 1E 104K-T	T	60.9/44.4
C4401	4030011600	S.CER C1608 JB 1E 104K-T	B	76.1/27.7
C4402	4550007480	S.TAN F930J106MAABMA	T	72.1/30
C4404	4030019500	S.CER GRM21BB31A106KE18 (GRM40 B)	B	83/33.5
C4405	4550007480	S.TAN F930J106MAABMA	T	70/30
C4406	4030011600	S.CER C1608 JB 1E 104K-T	T	73.9/35.4
C4408	4030019500	S.CER GRM21BB31A106KE18 (GRM40 B)	B	84.4/59.9
C4409	4340000510	S.MYL ECHU01153JX5	T	76.9/28.7
C4410	4030018600	S.CER C1608 CH 1H 152J-T	B	79.3/37.6
C4411	4550007480	S.TAN F930J106MAABMA	T	79.9/61.7
C4412	4030018620	S.CER C1608 CH 1H 222J-T	T	81.6/27.9
C4413	4030018620	S.CER C1608 CH 1H 222J-T	T	80.1/31.1
C4414	4030011340	S.CER C1608 CH 1H 471J-T	T	79.3/34
C4415	4030011340	S.CER C1608 CH 1H 471J-T	B	75.9/33.9
C4416	4030018580	S.CER C1608 CH 1H 821J-T	T	89.7/58.4
C4417	4030018580	S.CER C1608 CH 1H 821J-T	T	85.8/56.6
C4418	4030011600	S.CER C1608 JB 1E 104K-T	T	73.9/36.8
C4419	4510009910	S.ELE 16 CE 10 LH	T	89.5/34.3
C4420	4030011600	S.CER C1608 JB 1E 104K-T	B	97/58
C4421	4510009910	S.ELE 16 CE 10 LH	T	96.2/56.1
C4422	4030011600	S.CER C1608 JB 1E 104K-T	T	93.2/59.7
C4423	4030007090	S.CER C1608 CH 1H 470J-T	B	86.2/63.3
C4501	4030011600	S.CER C1608 JB 1E 104K-T	B	70.9/89.9
C4502	4030011600	S.CER C1608 JB 1E 104K-T	T	67.2/84.8
C4503	4030006900	S.CER C1608 JB 1H 103K-T	T	69.3/88.7
C4505	4030006960	S.CER C1608 CH 1H 050C-T	B	41.9/31.4
C5001	4030011600	S.CER C1608 JB 1E 104K-T	T	46.7/37.7
C5002	4030011600	S.CER C1608 JB 1E 104K-T	T	44.9/37.7
C5003	4030011600	S.CER C1608 JB 1E 104K-T	T	42.8/37.7
C5004	4030011600	S.CER C1608 JB 1E 104K-T	T	40.7/37.7
C5005	4030011600	S.CER C1608 JB 1E 104K-T	T	38.8/37.7
C5006	4030011600	S.CER C1608 JB 1E 104K-T	T	35.2/37.7
C5007	4030011600	S.CER C1608 JB 1E 104K-T	T	37.1/37.7
C5008	4030011600	S.CER C1608 JB 1E 104K-T	T	31.5/36
C5009	4030019500	S.CER GRM21BB31A106KE18 (GRM40 B)	T	33.6/38
C5010	4030019500	S.CER GRM21BB31A106KE18 (GRM40 B)	T	32.9/41.4
C5011	4550007470	S.TAN F931A107MNMBMA	B	54/38.5
C5012	4030011600	S.CER C1608 JB 1E 104K-T	T	55.8/28.7
C5014	4030011600	S.CER C1608 JB 1E 104K-T	T	27.3/30.1
C5015	4030011600	S.CER C1608 JB 1E 104K-T	T	27.3/28.6
C5016	4030011600	S.CER C1608 JB 1E 104K-T	T	55.8/26.7
C5017	4030011600	S.CER C1608 JB 1E 104K-T	T	55.8/24.4
C5018	4030011600	S.CER C1608 JB 1E 104K-T	T	55.8/22.9
C5019	4030011600	S.CER C1608 JB 1E 104K-T	T	55.8/21.4
C5020	4030011600	S.CER C1608 JB 1E 104K-T	T	27.3/25.8
C5021	4030011600	S.CER C1608 JB 1E 104K-T	T	27.3/24.1
C5022	4030011600	S.CER C1608 JB 1E 104K-T	T	27.3/22.3
C5023	4030011600	S.CER C1608 JB 1E 104K-T	T	27.3/20.7
C5024	4030011600	S.CER C1608 JB 1E 104K-T	T	27.3/18.3
C5025	4030011600	S.CER C1608 JB 1E 104K-T	T	55.4/15.9
C5026	4030011600	S.CER C1608 JB 1E 104K-T	T	27.3/17
C5027	4030011600	S.CER C1608 JB 1E 104K-T	T	48.1/9.2
C5028	4030011600	S.CER C1608 JB 1E 104K-T	T	46.5/9.2
C5029	4030011600	S.CER C1608 JB 1E 104K-T	T	42.6/9.2
C5030	4030011600	S.CER C1608 JB 1E 104K-T	T	41/9.2
C5031	4030011600	S.CER C1608 JB 1E 104K-T	T	38.9/9.2
C5032	4030011600	S.CER C1608 JB 1E 104K-T	T	36.8/9.2
C5033	4030011600	S.CER C1608 JB 1E 104K-T	T	34.5/9.2
C5034	4030011600	S.CER C1608 JB 1E 104K-T	T	32.7/9.2
C5036	4550007470	S.TAN F931A107MNMBMA	B	23.6/21.7
C5101	4030011600	S.CER C1608 JB 1E 104K-T	T	56.7/76.6
C5102	4030011600	S.CER C1608 JB 1E 104K-T	T	54.7/77.4
C5103	4030011600	S.CER C1608 JB 1E 104K-T	T	52.1/77.4
C5104	4030011600	S.CER C1608 JB 1E 104K-T	T	50.5/77.4
C5105	4030011600	S.CER C1608 JB 1E 104K-T	T	48.2/77.4
C5106	4030011600	S.CER C1608 JB 1E 104K-T	T	43.3/77.4
C5107	4030011600	S.CER C1608 JB 1E 104K-T	T	45.8/76.6
C5108	4030011600	S.CER C1608 JB 1E 104K-T	T	41.5/75.7
C5109	4030019500	S.CER GRM21BB31A106KE18 (GRM40 B)	T	41.7/78
C5110	4030019500	S.CER GRM21BB31A106KE18 (GRM40 B)	T	45.8/78.3
C5111	4550007470	S.TAN F931A107MNMBMA	B	32.5/72.3
C5113	4030011600	S.CER C1608 JB 1E 104K-T	T	65.2/68.1
C5114	4030011600	S.CER C1608 JB 1E 104K-T	T	65.2/65.6
C5115	4030011600	S.CER C1608 JB 1E 104K-T	T	65.2/63.2
C5116	4030011600	S.CER C1608 JB 1E 104K-T	T	65.2/62
C5117	4030011600	S.CER C1608 JB 1E 104K-T	T	65.2/60.5
C5118	4030011600	S.CER C1608 JB 1E 104K-T	T	36.3/69.4
C5119	4030011600	S.CER C1608 JB 1E 104K-T	T	36.3/68.2
C5120	4030011600	S.CER C1608 JB 1E 104K-T	T	36.3/65.1
C5121	4030011600	S.CER C1608 JB 1E 104K-T	T	36.3/63.7
C5122	4030011600	S.CER C1608 JB 1E 104K-T	T	36.3/61.7
C5123	4030011600	S.CER C1608 JB 1E 104K-T	T	64.8/55.3
C5124	4030011600	S.CER C1608 JB 1E 104K-T	T	36.3/60.2
C5125	4030011600	S.CER C1608 JB 1E 104K-T	T	36.3/57.7
C5126	4030011600	S.CER C1608 JB 1E 104K-T	T	36.3/56.4
C5127	4030011600	S.CER C1608 JB 1E 104K-T	T	57.2/48.5
C5128	4030011600	S.CER C1608 JB 1E 104K-T	T	55.8/48.5
C5129	4030011600	S.CER C1608 JB 1E 104K-T	T	51.6/48.5
C5130	4030011600	S.CER C1608 JB 1E 104K-T	T	50.2/48.5
C5131	4030011600	S.CER C1608 JB 1E 104K-T	T	48/48.5

M.=Mounted side (T: Mounted on the Top side, B: Mounted on the Bottom side)
S.=Surface mount

[MAIN UNIT]

REF NO.	PARTS NO.	DESCRIPTION	M.	H/V LOCATION
C5132	4030011600	S.CER C1608 JB 1E 104K-T	T	46.1/48.5
C5133	4030011600	S.CER C1608 JB 1E 104K-T	T	44/48.5
C5134	4030011600	S.CER C1608 JB 1E 104K-T	T	42/48.5
C5135	4030017490	S.CER C1608 JB 1A 105K-T	T	21.1/59.9
C5136	4550007470	S.TAN F931A107MNMBMA	B	32.8/60.9
C5201	4030017490	S.CER C1608 JB 1A 105K-T	T	16.1/9.2
C6001	4030011600	S.CER C1608 JB 1E 104K-T	T	142.9/110.8
C6002	4030007010	S.CER C1608 CH 1H 100D-T	T	152.1/109.8
C6003	4030011600	S.CER C1608 JB 1E 104K-T	T	71.7/108.8
C6004	4030006900	S.CER C1608 JB 1H 103K-T	T	70.8/102.8
C6005	4030006900	S.CER C1608 JB 1H 103K-T	T	162.7/114.2
C6006	4030019500	S.CER GRM21BB31A106KE18 (GRM40 B)	B	85.5/130.3
C6007	4030011340	S.CER C1608 CH 1H 471J-T	T	161.2/119.2
C6008	4030011600	S.CER C1608 JB 1E 104K-T	B	82.9/130.3
C6010	4030006860	S.CER C1608 JB 1H 102K-T	T	145.5/110.7
C6011	4030019500	S.CER GRM21BB31A106KE18 (GRM40 B)	B	78.2/130.3
C6013	4030011340	S.CER C1608 CH 1H 471J-T	B	158/120
C6015	4030011600	S.CER C1608 JB 1E 104K-T	B	80.2/130.3
C6018	4030006900	S.CER C1608 JB 1H 103K-T	T	74/101.2
C6019	4510009910	S.ELE 16 CE 10 LH	T	109.1/92.2
C6020	4030006900	S.CER C1608 JB 1H 103K-T	T	161.1/120.4
C6022	4030011600	S.CER C1608 JB 1E 104K-T	T	86/134.2
C6023	4030011600	S.CER C1608 JB 1E 104K-T	T	84.7/134.2
C6024	4030006900	S.CER C1608 JB 1H 103K-T	T	83.4/134.2
C6025	4030011600	S.CER C1608 JB 1E 104K-T	B	115.3/90.9
C6026	4030017490	S.CER C1608 JB 1A 105K-T	T	80.6/134.2
C6028	4030006900	S.CER C1608 JB 1H 103K-T	B	157.8/123.3
C6029	4030011600	S.CER C1608 JB 1E 104K-T	T	81.9/134.2
C6030	4030007130	S.CER C1608 CH 1H 101J-T	B	84.8/101.7
C6032	4030019500	S.CER GRM21BB31A106KE18 (GRM40 B)	B	78.4/106
C6035	4030006860	S.CER C1608 JB 1H 102K-T	T	75.3/102.8
C6036	4030019500	S.CER GRM21BB31A106KE18 (GRM40 B)	T	113.5/91.6
C6037	4030006860	S.CER C1608 JB 1H 102K-T	T	85.4/104.2
C6039	4030006900	S.CER C1608 JB 1H 103K-T	T	159.5/126.1
C6040	4030006900	S.CER C1608 JB 1H 103K-T	T	160.8/126.1
C6041	4030017490	S.CER C1608 JB 1A 105K-T	T	85.4/105.5
C6042	4030011600	S.CER C1608 JB 1E 104K-T	B	81.6/125.5
C6043	4030011600	S.CER C1608 JB 1E 104K-T	T	151.6/123.4
C6044	4030008850	S.CER C1608 JB 1H 123K-T	B	101.6/88.9
C6045	4030011600	S.CER C1608 JB 1E 104K-T	T	101.9/86
C6046	4030007030	S.CER C1608 CH 1H 150J-T	B	158.5/127.4
C6047	4030018610	S.CER C1608 CH 1H 182J-T	B	108.6/80.2
C6048	4030007120	S.CER C1608 CH 1H 820J-T	B	156.7/128.9
C6049	4030006860	S.CER C1608 JB 1H 102K-T	T	77.4/109.9
C6050	4030006860	S.CER C1608 JB 1H 102K-T	T	80.9/109.7
C6051	4030007100	S.CER C1608 CH 1H 560J-T	B	154.4/128.9
C6052	4030007050	S.CER C1608 CH 1H 220J-T	T	84.9/126.6
C6053	4030007130	S.CER C1608 CH 1H 101J-T	T	80.9/111
C6054	4030007050	S.CER C1608 CH 1H 220J-T	T	84.9/123.9
C6055	4030018580	S.CER C1608 CH 1H 821J-T	T	103.3/77.9
C6056	4030011600	S.CER C1608 JB 1E 104K-T	T	84.9/121.2
C6057	4030011600	S.CER C1608 JB 1E 104K-T	T	102/77.9
C6058	4030009510	S.CER C1608 CH 1H 010B-T	T	104.7/84.7
C6059	4030007040	S.CER C1608 CH 1H 180J-T	T	152.9/126.8
C6060	4030007140	S.CER C1608 CH 1H 121J-T	T	104.6/77.9
C6061	4030019500	S.CER GRM21BB31A106KE18 (GRM40 B)	B	86.6/87.6
C6062	4030008750	S.CER C1608 CH 1H 360J-T	B	151/124.6
C6063	4030007150	S.CER C1608 CH 1H 151J-T	B	84.6/122.6
C6064	4030008650	S.CER C1608 JB 1H 332K-T	B	89/108.2
C6065	4030007110	S.CER C1608 CH 1H 680J-T	B	87.3/119.2
C6066	4030010750	S.CER C1608 CH 1H 201J-T	B	87.5/111
C6067	4030011600	S.CER C1608 JB 1E 104K-T	T	107.5/83.4
C6068	4030011280	S.CER C1608 CH 1H 271J-T	B	88.4/124.7
C6069	4030007080	S.CER C1608 CH 1H 390J-T	T	90.3/122.1
C6070	4030009510	S.CER C1608 CH 1H 010B-T	T	142.9/118.6
C6071	4030007130	S.CER C1608 CH 1H 101J-T	T	77.4/113.7
C6072	4030007030	S.CER C1608 CH 1H 150J-T	B	141.2/125.4
C6073	4030011830	S.CER C1608 CH 1H 301J-T	T	88.1/125.4
C6074	4030007130	S.CER C1608 CH 1H 101J-T	B	79.6/114.2
C6075	4030007020	S.CER C1608 CH 1H 120J-T	B	91/122.7
C6076	4610001830	S.TRI TZB4S100AB10R00 (TZBX4N100BA110)	T	140.2/114.5
C6077	4030007030	S.CER C1608 CH 1H 150J-T	B	141.2/128.3
C6078	4030007170	S.CER C1608 CH 1H 221J-T	B	91.8/125.3
C6079	4030018620	S.CER C1608 CH 1H 222J-T	T	97.2/84.2
C6080	4030011280	S.CER C1608 CH 1H 271J-T	B	94.3/122.7
C6081	4030018620	S.CER C1608 CH 1H 222J-T	T	95.9/84.2
C6082	4030006860	S.CER C1608 JB 1H 102K-T	B	96.6/125.3
C6083	4030011340	S.CER C1608 CH 1H 471J-T	B	133.7/122.2
C6084	4030011280	S.CER C1608 CH 1H 271J-T	B	97.9/122.7
C6085	4030011600	S.CER C1608 JB 1E 104K-T	T	93.8/77.9
C6086	4030007010	S.CER C1608 CH 1H 100D-T	T	93.3/84.2
C6087	4030011600	S.CER C1608 JB 1E 104K-T	T	111.6/97.2
C6088	4030007140	S.CER C1608 CH 1H 121J-T	T	92/84.2
C6089	4030006900	S.CER C1608 JB 1H 103K-T	T	98.3/128.4
C6090	4030007070	S.CER C1608 CH 1H 330J-T	B	110.1/103.9
C6091	4030006900	S.CER C1608 JB 1H 103K-T	T	110.3/100
C6092	4030009920	S.CER C1608 CH 1H 050B-T	B	131/111.3
C6093	4030011600	S.CER C1608 JB 1E 104K-T	T	99.8/84.2
C6094	4030011600	S.CER C1608 JB 1E 104K-T	T	138.8/109
C6095	4030009510	S.CER C1608 CH 1H 010B-T	T	97/80.4
C6096	4030006900	S.CER C1608 JB 1H 103K-T	T	127.9/119.7
C6097	4030011600	S.CER C1608 JB 1E 104K-T	T	81.8/77.1
C6098	4030011600	S.CER C1608 JB 1E 104K-T	T	94.1/135.3
C6099	4030019500	S.CER GRM21BB31A106KE18 (GRM40 B)	T	80/77
C6100	4030007150	S.CER C1608 CH 1H 151J-T	B	91.7/133.4
C6101	4030006900	S.CER C1608 JB 1H 103K-T	T	99.5/134.8
C6102	4030006900	S.CER C1608 JB 1H 103K-T	B	127.6/118.1

[MAIN UNIT]

REF NO.	PARTS NO.	DESCRIPTION	M.	H/V LOCATION
C6103	4030009920	S.CER C1608 CH 1H 050B-T	B	115/100.7
C6104	4030011600	S.CER C1608 JB 1E 104K-T	T	89.9/77.3
C6105	4030007100	S.CER C1608 CH 1H 560J-T	B	103.6/135.2
C6106	4030007170	S.CER C1608 CH 1H 221J-T	B	101/134.5
C6107	4030011600	S.CER C1608 JB 1E 104K-T	T	84.4/80.4
C6109	4030007070	S.CER C1608 CH 1H 330J-T	B	101/131.9
C6110	4030007070	S.CER C1608 CH 1H 330J-T	B	113.4/104.7
C6111	4030006900	S.CER C1608 JB 1H 103K-T	B	115.2/106.2
C6112	4030011600	S.CER C1608 JB 1E 104K-T	T	87.1/78.4
C6113	4030010760	S.CER C1608 CH 1H 331J-T	B	101/129.4
C6114	4030011600	S.CER C1608 JB 1E 104K-T	B	86.6/86
C6115	4030006900	S.CER C1608 JB 1H 103K-T	T	85.2/81.8
C6116	4030006900	S.CER C1608 JB 1H 103K-T	T	115.7/106.9
C6117	4030007040	S.CER C1608 CH 1H 180J-T	T	111.2/106.9
C6118	4030009530	S.CER C1608 CH 1H 030B-T	T	111.2/105.6
C6119	4030009550	S.CER C1608 CH 1H 2R5B-T	T	105.2/108.6
C6120	4030007040	S.CER C1608 CH 1H 180J-T	T	106.5/108.6
C6121	4030011600	S.CER C1608 JB 1E 104K-T	T	94.2/112.4
C6122	4030006900	S.CER C1608 JB 1H 103K-T	B	93.9/104.6
C6123	4030011600	S.CER C1608 JB 1E 104K-T	T	93.4/110.1
C6124	4030006900	S.CER C1608 JB 1H 103K-T	B	88.6/114
C6125	4030007130	S.CER C1608 CH 1H 101J-T	T	95/104.5
C6126	4030019500	S.CER GRM21BB31A106KE18 (GRM40 B)	B	99.9/75.7
C6127	4030007150	S.CER C1608 CH 1H 151J-T	B	92/103.6
C6129	4030007140	S.CER C1608 CH 1H 121J-T	B	89.6/102.7
C6130	4030006900	S.CER C1608 JB 1H 103K-T	T	127.8/114.2
C6132	4030011600	S.CER C1608 JB 1E 104K-T	T	150.8/115.8
C6134	4030007130	S.CER C1608 CH 1H 101J-T	T	108.9/127.2
C6135	4030007030	S.CER C1608 CH 1H 150J-T	B	93.4/101.4
C6136	4030009920	S.CER C1608 CH 1H 050B-T	T	91.9/103
C6138	4030007020	S.CER C1608 CH 1H 120J-T	B	106.6/132.2
C6139	4030007170	S.CER C1608 CH 1H 221J-T	B	109.8/132.2
C6140	4030007050	S.CER C1608 CH 1H 220J-T	B	71/122.5
C6141	4030009920	S.CER C1608 CH 1H 050B-T	B	71.7/120.2
C6142	4030007060	S.CER C1608 CH 1H 270J-T	B	73.4/122.4
C6143	4030007030	S.CER C1608 CH 1H 150J-T	B	74.9/119.3
C6144	4030007030	S.CER C1608 CH 1H 150J-T	B	75.7/122.4
C6145	4030017490	S.CER C1608 JB 1A 105K-T	T	77.4/111.1
RL2301	6330001721	REL ATN207-K1		
RL2302	6330001721	REL ATN207-K1		
CP1253	6910009670	S.CHE HK3-S-T	T	51.1/120.6
J1002	6510024151	S.CON 50FY-BMT-TB(LF)(SN)	T	18.4/102.8
J1003	6510021861	CON BH-800.4GG <LTC>		
J1051	6510024151	S.CON 50FY-BMT-TB(LF)(SN)	T	39.4/102.8
J1501	6510022601	S.CON 30FMN-BMTTR-A-TBT(LF)(SN)	T	166.6/4.4
J1601	6510022581	S.CON 24FMN-BMTTR-A-TBT(LF)(SN)	T	7.9/122.5
J1701	6510022581	S.CON 24FMN-BMTTR-A-TBT(LF)(SN)	T	125.3/135.6
J1801	6510022581	S.CON 24FMN-BMTTR-A-TBT(LF)(SN)	T	52.5/147
J1901	6510024311	CON B4B-PH-K-S(LF)(SN)		
J2001	6510023671	CON TCS4480-0141577		
J2002	6510023661	CON TCS4470-0141577		
J2101	6510026540	CON UBB-4R-D14T-4D(LF)(SN)		
J2201	6510023720	CON LGY6501-0600C		
J2301	6510024311	CON B4B-PH-K-S(LF)(SN)		
J2302	6510023720	CON LGY6501-0600C		
J2401	6510023720	CON LGY6501-0600C		
J2501	6510023900	CON LGR4619-7000		
J2502	6510024311	CON B4B-PH-K-S(LF)(SN)		
J3001	6510007020	CON TMP-J01X-V6		
J3401	6510007020	CON TMP-J01X-V6		
J3701	6510007020	CON TMP-J01X-V6		
J3702	6510007020	CON TMP-J01X-V6		
J4101	6510022801	S.CON B10B-PH-SM4-TB(LF)(SN)	T	12.7/85
J6001	6510007020	CON TMP-J01X-V6		
J6002	6510007020	CON TMP-J01X-V6		
J6102	6510026920	CON IMSA-9180B-12Z904		
BT1001	3020000110	LIT CR2032		
W6001	7120000490	JUM ERD25T0		
EP1002	6910014690	S.BEA MPZ1608S221A-T	T	13.8/115.9
EP1003	6910014690	S.BEA MPZ1608S221A-T	T	13.8/114.6
EP1004	6910014690	S.BEA MPZ1608S221A-T	T	13.8/113.3
EP1005	6910014690	S.BEA MPZ1608S221A-T	T	13.8/112
EP1006	6910014690	S.BEA MPZ1608S221A-T	T	25.1/116
EP1007	6910014690	S.BEA MPZ1608S221A-T	T	13.8/110.7
EP1501	6910012350	S.BEA MMZ1608Y 102BT	T	181.6/8.6
EP1502	6910014640	S.BEA MPZ2012S221A-T	T	180/9
EP1503	6910012350	S.BEA MMZ1608Y 102BT	T	178.5/9.4
EP1504	6910012350	S.BEA MMZ1608Y 102BT	T	176.4/8.6
EP1505	6910014690	S.BEA MPZ1608S221A-T	T	175.1/8.6
EP1506	6910012350	S.BEA MMZ1608Y 102BT	T	172.9/8.6
EP1507	6910012350	S.BEA MMZ1608Y 102BT	T	171.2/8.6
EP1510	6910014640	S.BEA MPZ2012S221A-T	T	155/10.1
EP1511	6910012350	S.BEA MMZ1608Y 102BT	T	151.5/11.3
EP1512	6910012350	S.BEA MMZ1608Y 102BT	T	152.8/11.3
EP1601	6910015970	S.BEA MMZ1608B 301CT-AS	T	3.7/135
EP1602	6910015970	S.BEA MMZ1608B 301CT-AS	T	3.7/133.8
EP1603	6910015970	S.BEA MMZ1608B 301CT-AS	T	3.7/132.6
EP1604	6910015970	S.BEA MMZ1608B 301CT-AS	T	3.7/131.3
EP1605	6910015970	S.BEA MMZ1608B 301CT-AS	T	3.7/129.9
EP1606	6910015970	S.BEA MMZ1608B 301CT-AS	T	3.7/128.6
EP1607	6910015970	S.BEA MMZ1608B 301CT-AS	T	3.7/127.3

M.=Mounted side (T: Mounted on the Top side, B: Mounted on the Bottom side)
S.=Surface mount

[MAIN UNIT]

REF NO.	PARTS NO.	DESCRIPTION	M.	H/V LOCATION
EP1608	6910015970	S.BEA MMZ1608B 301CT-AS	T	3.7/126
EP1609	6910012350	S.BEA MMZ1608Y 102BT	T	12.5/125.3
EP1610	6910012350	S.BEA MMZ1608Y 102BT	T	12.5/124
EP1611	6910012350	S.BEA MMZ1608Y 102BT	T	15.2/122.9
EP1612	6910014690	S.BEA MPZ1608S221A-T	T	12.5/121
EP1613	6910014690	S.BEA MPZ1608S221A-T	T	12.5/119.3
EP1614	6910014690	S.BEA MPZ1608S221A-T	T	12.5/118
EP1615	6910014690	S.BEA MPZ1608S221A-T	T	3.7/116
EP1616	6910014690	S.BEA MPZ1608S221A-T	T	3.7/114.8
EP1617	6910014640	S.BEA MPZ2012S221A-T	T	4/110.5
EP1618	6910014690	S.BEA MPZ1608S221A-T	T	3.7/124.7
EP1701	6910014690	S.BEA MPZ1608S221A-T	T	130/139.9
EP1702	6910012350	S.BEA MMZ1608Y 102BT	T	128.7/139.9
EP1703	6910012350	S.BEA MMZ1608Y 102BT	T	127.4/139.9
EP1704	6910014690	S.BEA MPZ1608S221A-T	T	126.1/139.9
EP1705	6910012350	S.BEA MMZ1608Y 102BT	T	124.8/139.9
EP1706	6910012350	S.BEA MMZ1608Y 102BT	T	122.4/139.9
EP1707	6910014690	S.BEA MPZ1608S221A-T	T	121.1/139.9
EP1708	6910014690	S.BEA MPZ1608S221A-T	T	119.8/139.9
EP1709	6910014690	S.BEA MPZ1608S221A-T	T	118.5/139.9
EP1710	6910014640	S.BEA MPZ2012S221A-T	T	115.8/139.9
EP1801	6910014690	S.BEA MPZ1608S221A-T	T	41.7/142.5
EP1802	6910014690	S.BEA MPZ1608S221A-T	T	43/142.5
EP1803	6910014690	S.BEA MPZ1608S221A-T	T	44.3/142.5
EP1804	6910014690	S.BEA MPZ1608S221A-T	T	47/142.5
EP1805	6910014690	S.BEA MPZ1608S221A-T	T	48.3/142.5
EP1901	6910018930	S.BEA MPZ2012S601A	T	154.6/143
EP1902	6910018930	S.BEA MPZ2012S601A	T	158.2/143.1
EP2001	6910014690	S.BEA MPZ1608S221A-T	T	178.8/121.5
EP2002	6910014690	S.BEA MPZ1608S221A-T	T	178.8/124.1
EP2003	6910014690	S.BEA MPZ1608S221A-T	T	174.5/112.8
EP2004	6910014690	S.BEA MPZ1608S221A-T	T	178.8/120.2
EP2031	6910014690	S.BEA MPZ1608S221A-T	T	181.8/144.8
EP2101	6910012350	S.BEA MMZ1608Y 102BT	B	192.2/62.7
EP2102	6910012350	S.BEA MMZ1608Y 102BT	B	183.7/62.7
EP2103	6910012350	S.BEA MMZ1608Y 102BT	T	175.3/30.3
EP2104	6910012350	S.BEA MMZ1608Y 102BT	T	172.7/26.3
EP2121	6910012350	S.BEA MMZ1608Y 102BT	T	173.8/36.1
EP2131	6910012350	S.BEA MMZ1608Y 102BT	T	158/58.7
EP2132	6910012350	S.BEA MMZ1608Y 102BT	T	158/60.4
EP2201	6910012350	S.BEA MMZ1608Y 102BT	T	195.2/37
EP2301	6910014730	S.BEA MPZ2012S331A-T	B	188.7/11.5
EP2302	6910014730	S.BEA MPZ2012S331A-T	B	183/19.2
EP2303	6910014730	S.BEA MPZ2012S331A-T	B	186.4/17
EP2304	6910014730	S.BEA MPZ2012S331A-T	B	196.1/20
EP2401	6910015970	S.BEA MMZ1608B 301CT-AS	B	193.5/79.5
EP2402	6910015970	S.BEA MMZ1608B 301CT-AS	B	197.2/79.6
EP3001	6910012350	S.BEA MMZ1608Y 102BT	B	136.9/38.8
EP3601	6910012350	S.BEA MMZ1608Y 102BT	B	135.5/27.8
EP3602	6910012350	S.BEA MMZ1608Y 102BT	B	132.5/25.6
EP3715	6910015970	S.BEA MMZ1608B 301CT-AS	T	140.1/99
EP4101	6910014730	S.BEA MPZ2012S331A-T	B	2.3/79.1
EP5001	6910014690	S.BEA MPZ1608S221A-T	T	29.5/36.8
EP5101	6910014690	S.BEA MPZ1608S221A-T	T	38.9/76.6
EP6001	6910015970	S.BEA MMZ1608B 301CT-AS	T	146.8/110.7

[PLL UNIT]

REF NO.	PARTS NO.	DESCRIPTION	M.	H/V LOCATION
IC1	1180000421	S.IC TA78L05F(TE12R,F)	B	94.4/59.7
IC2	1130009691	S.IC TC74HCT7007AF(F) S	T	133.6/64.3
IC3	1130011530	S.IC CD74HC4094M96	T	122.4/64.6
IC4	1130011530	S.IC CD74HC4094M96	T	133/75.2
IC101	1190002101	S.IC AD9951YSVZ <FE>	T	110.6/100.7
IC102	1130010560	S.IC SN74AHC244PWR	T	126.1/95.9
IC103	1180003190	S.REG UPD120N33TA-E1-A	T	115.7/86.4
IC104	1180003200	S.REG UPD120N18TA-E1-A	T	115.8/91.4
IC192	1130013010	S.IC SN74AHC1G08DCK3	T	77.6/36.8
IC320	1110007400	S.IC BGA616	T	43.3/67.2
IC381	1130013270	S.IC ADF4116BRUZ <FE>	T	70/70.3
IC401	1130013010	S.IC SN74AHC1G08DCK3	T	114/3.1
IC402	1130003831	S.IC TC7S04F(TE85R,F)	T	90.5/9.5
IC403	1140007881	S.IC TC190G08EFG0046JDZ/SC1246A	T	104.1/13.6
IC405	1130013010	S.IC SN74AHC1G08DCK3	T	75.2/53.2
IC620	1110007400	S.IC BGA616	T	38.4/47.5
IC681	1130013270	S.IC ADF4116BRUZ <FE>	T	29.3/39.8
IC701	1140014960	S.IC TC190G02EFG-0058/SC1287A	T	130.6/15.3
Q1	1590003680	S.TRA KRC402 RTK/P	T	138.4/75.4
Q51	1530003890	S.TRA KTC3880S Y-RTK/P	T	101.5/41.6
Q61	1530004011	S.TRA KTC3770U-C-RTK/P	T	109.9/41.5
Q71	1530003890	S.TRA KTC3880S Y-RTK/P	T	109.5/51.1
Q87	1530003890	S.TRA KTC3880S Y-RTK/P	T	133.1/87.2
Q121	1590003770	S.TRA KRA302E-RTK/P	T	85.8/93.8
Q122	1590003680	S.TRA KRC402 RTK/P	B	87.2/92.2
Q123	1590003770	S.TRA KRA302E-RTK/P	T	85.2/96.3
Q124	1590003680	S.TRA KRC402 RTK/P	B	87.6/95.2
Q125	1590003770	S.TRA KRA302E-RTK/P	T	85.8/91.1
Q126	1590003680	S.TRA KRC402 RTK/P	B	86.9/89.2
Q127	1590003770	S.TRA KRA302E-RTK/P	T	86/99
Q128	1590003680	S.TRA KRC402 RTK/P	B	87.9/98.2
Q151	1530003900	S.TRA KTC4075 BL-RTK/P	T	82.7/70.2
Q152	1530003340	S.TRA 2SC3357-T1 RF	B	117.3/106.5
Q181	1530003900	S.TRA KTC4075 BL-RTK/P	T	53.9/78.1
Q201	1560000491	S.FET 2SK508-T2B-A K52	T	74.1/96.5
Q202	1530003960	S.TRA KTC2875-B-RTK/P	T	73.6/102.5
Q221	1560000491	S.FET 2SK508-T2B-A K52	T	57.2/96.5
Q222	1530003960	S.TRA KTC2875-B-RTK/P	T	56.8/102.5
Q251	1560000491	S.FET 2SK508-T2B-A K52	T	40.1/96.5
Q252	1530003960	S.TRA KTC2875-B-RTK/P	T	40/102.5
Q271	1560000491	S.FET 2SK508-T2B-A K52	T	23.1/96.5
Q272	1530003960	S.TRA KTC2875-B-RTK/P	T	23.1/102.5
Q301	1530004011	S.TRA KTC3770U-C-RTK/P	T	33.2/76
Q361	1590003680	S.TRA KRC402 RTK/P	B	20.9/77.3
Q402	1530003900	S.TRA KTC4075 BL-RTK/P	T	93.2/20.9
Q403	1530003900	S.TRA KTC4075 BL-RTK/P	T	115.6/12.5
Q404	1590003770	S.TRA KRA302E-RTK/P	T	94.1/4.8
Q421	1590003770	S.TRA KRA302E-RTK/P	T	81.3/9.9
Q422	1590003680	S.TRA KRC402 RTK/P	T	83.1/12.4
Q423	1590003770	S.TRA KRA302E-RTK/P	T	81.3/7.4
Q424	1590003680	S.TRA KRC402 RTK/P	T	82.7/5
Q425	1590003770	S.TRA KRA302E-RTK/P	T	81.7/14.3
Q426	1590003680	S.TRA KRC402 RTK/P	T	83.1/16.6
Q427	1590003770	S.TRA KRA302E-RTK/P	T	81.3/18.6
Q428	1590003680	S.TRA KRC402 RTK/P	T	83.1/20.8
Q451	1560000331	S.FET 2SK210-GR(TE85R,F)	T	61/44
Q452	1530003900	S.TRA KTC4075 BL-RTK/P	T	61.9/34.8
Q481	1530003900	S.TRA KTC4075 BL-RTK/P	T	22.8/34.1
Q501	1560000491	S.FET 2SK508-T2B-A K52	T	30.8/13.4
Q502	1530003960	S.TRA KTC2875-B-RTK/P	T	31.2/7.5
Q521	1560000491	S.FET 2SK508-T2B-A K52	T	14/13.5
Q522	1530003960	S.TRA KTC2875-B-RTK/P	T	14.3/7.5
Q551	1560000491	S.FET 2SK508-T2B-A K52	T	47.6/13.4
Q552	1530003960	S.TRA KTC2875-B-RTK/P	T	47.9/7.5
Q571	1560000491	S.FET 2SK508-T2B-A K52	T	64.5/13.5
Q572	1530003960	S.TRA KTC2875-B-RTK/P	T	64.7/7.5
Q601	1530004011	S.TRA KTC3770U-C-RTK/P	T	41/37
Q661	1590003680	S.TRA KRC402 RTK/P	B	5.1/27.9
Q681	1590003770	S.TRA KRA302E-RTK/P	T	67.8/51.5
Q701	1530003900	S.TRA KTC4075 BL-RTK/P	B	123.9/12.4
Q702	1530003900	S.TRA KTC4075 BL-RTK/P	T	141.9/19.2
Q801	1530003890	S.TRA KTC3880S Y-RTK/P	T	127.9/46.7
Q831	1560000561	S.FET 2SK882-GR(TE85L,F)	T	149.4/37.4
Q851	1590003680	S.TRA KRC402 RTK/P	T	138/52.1
Q852	1590003770	S.TRA KRA302E-RTK/P	T	137.8/49.8
Q853	1590003680	S.TRA KRC402 RTK/P	B	109.5/55.3
Q854	1590003770	S.TRA KRA302E-RTK/P	T	106.6/54.7
Q1502	1590003680	S.TRA KRC402 RTK/P	T	73/63.6
Q1521	1590003680	S.TRA KRC402 RTK/P	B	21.5/62.4
Q1522	1590003770	S.TRA KRA302E-RTK/P	T	21.2/64.1
Q2501	1590003680	S.TRA KRC402 RTK/P	T	85.1/50.4
Q2511	1590003680	S.TRA KRC402 RTK/P	B	7.2/47.5
Q2512	1590003770	S.TRA KRA302E-RTK/P	T	5.6/45.5
D81	1750000581	S.DIO 1SV307(TPH3,F)	B	97/49.7
D201	1720000831	S.VAR KV1770STL-G	T	74.5/88.8
D202	1720000831	S.VAR KV1770STL-G	B	74.3/88.7
D221	1720000831	S.VAR KV1770STL-G	T	57.5/88.7
D222	1720000831	S.VAR KV1770STL-G	B	57.5/88.7
D251	1750001720	S.VAR 1SV215(TPH3,F)	T	39.1/87.9
D252	1750001720	S.VAR 1SV215(TPH3,F)	T	41.4/87.9
D253	1750001720	S.VAR 1SV215(TPH3,F)	B	41.4/88
D254	1750001720	S.VAR 1SV215(TPH3,F)	B	39.1/87.9
D271	1750001720	S.VAR 1SV215(TPH3,F)	T	22.3/87.2
D272	1750001720	S.VAR 1SV215(TPH3,F)	T	24.6/87.1
D273	1750001720	S.VAR 1SV215(TPH3,F)	B	24.5/87.9
D274	1750001720	S.VAR 1SV215(TPH3,F)	B	22.3/88
D361	1750000581	S.DIO 1SV307(TPH3,F)	T	22.7/75.5
D362	1750000581	S.DIO 1SV307(TPH3,F)	T	26.1/75.4
D401	1750001320	S.DIO KDS4148U RTK/P	B	88.9/6.7
D451	1720000681	S.VAR 1SV262(TPH2,F)	T	64.7/33.5

M.=Mounted side (T: Mounted on the Top side, B: Mounted on the Bottom side)
S.=Surface mount

[PLL UNIT]

REF NO.	PARTS NO.	DESCRIPTION		M.	H/V LOCATION
D452	1790000491	S.DIO	HSM88ASTR-E	T	67/46.2
D453	1790000491	S.DIO	HSM88ASTR-E	T	67.1/43
D501	1720000831	S.VAR	KV1770STL-G	T	30.2/21.3
D502	1720000831	S.VAR	KV1770STL-G	B	30.3/21.2
D521	1720000831	S.VAR	KV1770STL-G	T	13.5/21.2
D522	1720000831	S.VAR	KV1770STL-G	B	13.5/21.2
D551	1750001720	S.VAR	1SV215(TPH3,F)	T	48.7/22
D552	1750001720	S.VAR	1SV215(TPH3,F)	T	46.4/22
D553	1750001720	S.VAR	1SV215(TPH3,F)	B	46.5/22
D554	1750001720	S.VAR	1SV215(TPH3,F)	B	48.7/22
D571	1750001720	S.VAR	1SV215(TPH3,F)	T	65.5/22
D572	1750001720	S.VAR	1SV215(TPH3,F)	T	63.2/22
D573	1750001720	S.VAR	1SV215(TPH3,F)	B	63.3/22
D574	1750001720	S.VAR	1SV215(TPH3,F)	B	65.5/22
D661	1750000581	S.DIO	1SV307(TPH3,F)	T	6.6/27.3
D662	1750000581	S.DIO	1SV307(TPH3,F)	T	6.7/29.9
D680	1750001320	S.DIO	KDS4148U RTK/P	B	43.8/47.6
D681	1750001320	S.DIO	KDS4148U RTK/P	T	69.8/52.2
D821	1750000431	S.DIO	HSB88WSTR-E	T	132.7/32.5
D1201	1750001310	S.DIO	KDS114 RTK/PA	T	36.4/64.1
D1221	1750001310	S.DIO	KDS114 RTK/PA	B	22.5/70
D2201	1750001310	S.DIO	KDS114 RTK/PA	T	19.5/46.8
D2221	1750001310	S.DIO	KDS114 RTK/PA	T	8.5/39
FI101	2020001820	S.CER	SFECV10M5FA00-R0 (SFECV10.5MA5S)	T	96.1/89
FI401	2020001820	S.CER	SFECV10M5FA00-R0 (SFECV10.5MA5S)	T	92.9/28.8
FI831	2030000300	S.MON	DSF753SBF 64.491 MHz (FL-356)	T	149.7/42.6
X51	6050012560	S.XTA	CR-770B DSA321SD 32 MHz	T	97.9/41.6
L51	6200005011	S.COI	NLV25T-100J	T	96.8/44.9
L52	6200005011	S.COI	NLV25T-100J	T	103.4/44.4
L53	6200009351	S.COI	ELJRE R22GFA	T	105.8/41.9
L61	6150004831	S.COI	LS-509-LF	T	119.3/40.8
L62	6150004831	S.COI	LS-509-LF	T	119.3/48.3
L72	6200009181	S.COI	ELJRE R10JFA	T	103/52
L73	6200009531	S.COI	ELJRE R15GFA	T	101.2/54.1
L75	6200009531	S.COI	ELJRE R15GFA	T	98.6/55.2
L86	6200002861	S.COI	NLV25T-4R7J	T	102.9/49.6
L87	6200009181	S.COI	ELJRE R10JFA	T	135.4/87.2
L88	6200009531	S.COI	ELJRE R15GFA	T	138.8/86.5
L89	6200009531	S.COI	ELJRE R15GFA	T	142.3/89.8
L101	6200005011	S.COI	NLV25T-100J	B	113.9/86.4
L103	6140002810	S.COI	LR-317	T	98.2/100.8
L104	6200005011	S.COI	NLV25T-100J	B	109/94.8
L105	6200005011	S.COI	NLV25T-100J	B	111.8/94.8
L106	6200006671	S.COI	ELJRE 68NGFA	B	105.8/98.2
L121	6200005011	S.COI	NLV25T-100J	B	84.1/97.1
L122	6200005011	S.COI	NLV25T-100J	B	82.2/90.2
L123	6200005011	S.COI	NLV25T-100J	T	82.4/95.7
L125	6200005011	S.COI	NLV25T-100J	T	82.4/90.9
L127	6200004951	S.COI	NLV25T-1R8J	T	99.8/90.6
L128	6200005011	S.COI	NLV25T-100J	T	85.4/88.4
L151	6200002651	S.COI	NLV25T-R18J	B	112.8/105.9
L155	6200002851	S.COI	NLV25T-R82J	T	98.2/94
L156	6200002851	S.COI	NLV25T-R82J	T	100.9/93.4
L161	6200001981	S.COI	NLV25T-1R0J	T	90.1/76.3
L162	6200001981	S.COI	NLV25T-1R0J	T	81.8/66.4
L181	6200005011	S.COI	NLV25T-100J	T	52.7/75.5
L202	6190001411	COI	#E526GN-110501		
L204	6200002041	S.COI	NLV25T-101J	B	74.1/92.4
L205	6200010440	S.COI	C2520C-1R2G-A (1.2U)	T	63.9/91.5
L206	6200010440	S.COI	C2520C-1R2G-A (1.2U)	T	67.8/86.8
L222	6190001411	COI	#E526GN-110501		
L224	6200002041	S.COI	NLV25T-101J	B	57.3/92.4
L225	6200010440	S.COI	C2520C-1R2G-A (1.2U)	T	46.9/91.5
L226	6200010440	S.COI	C2520C-1R2G-A (1.2U)	T	51/86.8
L252	6190001421	COI	#E526GN-110502		
L254	6200002041	S.COI	NLV25T-101J	B	39.6/92.4
L255	6200010440	S.COI	C2520C-1R2G-A (1.2U)	T	29.9/91.5
L256	6200010440	S.COI	C2520C-1R2G-A (1.2U)	T	34.4/86.8
L272	6190001441	COI	#E526GN-110504		
L274	6200002041	S.COI	NLV25T-101J	B	22.8/92.4
L275	6200010440	S.COI	C2520C-1R2G-A (1.2U)	T	13.4/91.5
L276	6200010440	S.COI	C2520C-1R2G-A (1.2U)	T	16/86.8
L301	6200005011	S.COI	NLV25T-100J	T	33.9/72.7
L304	6200002861	S.COI	NLV25T-4R7J	T	33.9/70.2
L320	6200009101	S.COI	ELJRE R18GFA	T	40.3/74.2
L321	6200002841	S.COI	NLV25T-R22J	T	42.3/64.1
L328	6200006991	S.COI	ELJRE 56NGFA	T	42.3/77.3
L329	6200006991	S.COI	ELJRE 56NGFA	T	43.9/75.4
L401	6200005011	S.COI	NLV25T-100J	T	88.3/13.9
L421	6200005011	S.COI	NLV25T-100J	B	84.5/10.9
L422	6200005011	S.COI	NLV25T-100J	B	83.8/7.6
L423	6200005011	S.COI	NLV25T-100J	B	81.7/1.9
L425	6200005011	S.COI	NLV25T-100J	B	83.1/4.6
L428	6200005011	S.COI	NLV25T-100J	T	81.6/23.7
L452	6130002970	COI	LB-343		
L453	6200005011	S.COI	NLV25T-100J	T	56.8/40.6
L454	6200009861	S.COI	NLV25T-1R5J	T	57.8/34.4
L455	6200005011	S.COI	NLV25T-100J	T	54/39.6
L481	6200005011	S.COI	NLV25T-100J	B	21.7/37.1
L502	6190001411	COI	#E526GN-110501		
L504	6200002041	S.COI	NLV25T-101J	B	29.7/17.5
L505	6200010440	S.COI	C2520C-1R2G-A (1.2U)	T	40.7/18.4
L506	6200010440	S.COI	C2520C-1R2G-A (1.2U)	T	36.6/23.1
L522	6190001411	COI	#E526GN-110501		
L524	6200002041	S.COI	NLV25T-101J	B	14.1/17.5
L525	6200010440	S.COI	C2520C-1R2G-A (1.2U)	T	24.1/18.4

[PLL UNIT]

REF NO.	PARTS NO.	DESCRIPTION		M.	H/V LOCATION
L526	6200010440	S.COI	C2520C-1R2G-A (1.2U)	T	19.7/23.1
L552	6190001421	COI	#E526GN-110502		
L554	6200002041	S.COI	NLV25T-101J	B	47/17.6
L555	6200010440	S.COI	C2520C-1R2G-A (1.2U)	T	57.9/18.4
L556	6200010440	S.COI	C2520C-1R2G-A (1.2U)	T	53.3/23.1
L572	6190001441	COI	#E526GN-110504		
L574	6200002041	S.COI	NLV25T-101J	B	63.8/17.6
L575	6200010440	S.COI	C2520C-1R2G-A (1.2U)	T	73.9/18.4
L576	6200010440	S.COI	C2520C-1R2G-A (1.2U)	T	72/23.1
L601	6200005011	S.COI	NLV25T-100J	T	39.8/34
L604	6200002861	S.COI	NLV25T-4R7J	B	43.7/40.5
L620	6200009101	S.COI	ELJRE R18GFA	T	44.1/41.6
L621	6200002841	S.COI	NLV25T-R22J	T	33.3/47.7
L628	6200006991	S.COI	ELJRE 56NGFA	T	41.1/44.1
L629	6200006991	S.COI	ELJRE 56NGFA	T	41.1/45.3
L701	6200005011	S.COI	NLV25T-100J	T	124.1/24.8
L702	6200005491	S.COI	NLV32T-331J	T	137.5/6.4
L703	6200005491	S.COI	NLV32T-331J	T	141.2/6
L704	6200008641	S.COI	NLV32T-391J	T	144.8/3
L721	6200002041	S.COI	NLV25T-101J	T	141/12.4
L821	6140002810	S.COI	LR-317	T	127/32.5
L822	6140002810	S.COI	LR-317	T	138.4/32.5
L831	6140003770	S.COI	LR-414 4KBL (STP-01435)	T	139.5/40.5
L834	6150004280	COI	LS-484B (C-14927)		
L851	6200005011	S.COI	NLV25T-100J	T	135.2/50.8
L852	6200005011	S.COI	NLV25T-100J	B	106.8/57.2
L1201	6200002601	S.COI	NLV25T-047J	T	33.6/65.5
L1221	6200002431	S.COI	NLV25T-082J	T	27.9/65.5
L1222	6200002431	S.COI	NLV25T-082J	T	27.2/68.9
L1223	6200002641	S.COI	NLV25T-R15J	T	21/70.1
L1224	6200002411	S.COI	NLV25T-056J	T	30.8/64.4
L1225	6200005011	S.COI	NLV25T-100J	B	25.1/66.3
L1301	6200005011	S.COI	NLV25T-100J	T	75.6/72.4
L1521	6200005011	S.COI	NLV25T-100J	B	27.2/63.7
L2201	6200002601	S.COI	NLV25T-047J	T	19.5/44.4
L2202	6200005011	S.COI	NLV25T-100J	B	28.3/48.9
L2221	6200002431	S.COI	NLV25T-082J	T	12.4/43.7
L2222	6200002431	S.COI	NLV25T-082J	T	11.2/39.4
L2223	6200002641	S.COI	NLV25T-R15J	T	5.1/34.6
L2224	6200002411	S.COI	NLV25T-056J	T	13.4/46.6
L2225	6200005011	S.COI	NLV25T-100J	T	6/43.2
L2511	6200005011	S.COI	NLV25T-100J	B	11.8/48.8
L4301	6200005011	S.COI	NLV25T-100J	B	35.1/46.1
R1	7030003360	S.RES	ERJ3GEYJ 221 V (220)	B	149.3/61.5
R2	7030003360	S.RES	ERJ3GEYJ 221 V (220)	B	142.5/61.8
R3	7030003360	S.RES	ERJ3GEYJ 221 V (220)	B	141.8/74.5
R4	7030003360	S.RES	ERJ3GEYJ 221 V (220)	B	149.3/75.5
R6	7030003360	S.RES	ERJ3GEYJ 221 V (220)	B	149.3/77.5
R7	7030003360	S.RES	ERJ3GEYJ 221 V (220)	B	141.8/78.5
R8	7030003360	S.RES	ERJ3GEYJ 221 V (220)	B	149.3/79.5
R9	7030011030	S.RES	ERJ1TYJ 270U (27)	B	104.4/60.7
R10	7030003200	S.RES	ERJ3GEYJ 100 V (10)	T	127.8/72
R11	7030003200	S.RES	ERJ3GEYJ 100 V (10)	T	127.8/75.6
R12	7030003200	S.RES	ERJ3GEYJ 100 V (10)	T	127.8/74.4
R13	7030003200	S.RES	ERJ3GEYJ 100 V (10)	T	127.8/73.2
R14	7030003200	S.RES	ERJ3GEYJ 100 V (10)	B	131.4/77.1
R16	7030003550	S.RES	ERJ3GEYJ 822 V (8.2K)	T	127.4/63.4
R18	7030003550	S.RES	ERJ3GEYJ 822 V (8.2K)	T	127.4/64.7
R19	7030003550	S.RES	ERJ3GEYJ 822 V (8.2K)	T	127.4/66.4
R20	7030003550	S.RES	ERJ3GEYJ 822 V (8.2K)	T	118/60.7
R21	7030003550	S.RES	ERJ3GEYJ 822 V (8.2K)	T	116.6/61.4
R22	7030003550	S.RES	ERJ3GEYJ 822 V (8.2K)	B	122.5/62.4
R23	7030003550	S.RES	ERJ3GEYJ 822 V (8.2K)	T	126.6/68.4
R24	7030003560	S.RES	ERJ3GEYJ 103 V (10K)	T	137.5/78.9
R25	7030003860	S.RES	ERJ3GE JPW V	T	117.4/65.5
R26	7030003860	S.RES	ERJ3GE JPW V	T	116.1/65.5
R51	7030003580	S.RES	ERJ3GEYJ 153 V (15K)	T	93.1/43.6
R52	7030003590	S.RES	ERJ3GEYJ 183 V (18K)	T	93.1/40.8
R53	7030003690	S.RES	ERJ3GEYJ 124 V (120K)	T	94.4/43.6
R54	7030003590	S.RES	ERJ3GEYJ 183 V (18K)	T	100.7/44
R55	7030003610	S.RES	ERJ3GEYJ 273 V (27K)	T	101.1/38.5
R56	7030003320	S.RES	ERJ3GEYJ 101 V (100)	T	103.5/38.5
R57	7030003860	S.RES	ERJ3GE JPW V	T	103.8/41.3
R58	7030003860	S.RES	ERJ3GE JPW V	T	107.1/38.5
R61	7030003260	S.RES	ERJ3GEYJ 330 V (33)	T	106.5/44.1
R62	7030003600	S.RES	ERJ3GEYJ 223 V (22K)	T	107.8/44.1
R63	7030003560	S.RES	ERJ3GEYJ 103 V (10K)	T	109.7/43.4
R64	7030003370	S.RES	ERJ3GEYJ 271 V (270)	T	109.9/38.1
R65	7030003860	S.RES	ERJ3GE JPW V	B	123.5/48.6
R66	7030003320	S.RES	ERJ3GEYJ 101 V (100)	T	115.8/52.5
R71	7030003510	S.RES	ERJ3GEYJ 392 V (3.9K)	T	108.5/48.8
R72	7030003520	S.RES	ERJ3GEYJ 472 V (4.7K)	T	111.6/50.9
R73	7030003200	S.RES	ERJ3GEYJ 100 V (10)	B	106/52
R74	7030003360	S.RES	ERJ3GEYJ 221 V (220)	T	111.2/53.5
R85	7030003380	S.RES	ERJ3GEYJ 331 V (330)	T	99.9/50.7
R86	7030003400	S.RES	ERJ3GEYJ 471 V (470)	T	127/85.3
R87	7030003200	S.RES	ERJ3GEYJ 100 V (10)	T	130.8/89.3
R88	7030003520	S.RES	ERJ3GEYJ 472 V (4.7K)	T	129.4/87.2
R89	7030003510	S.RES	ERJ3GEYJ 392 V (3.9K)	T	130.7/87.2
R90	7030003360	S.RES	ERJ3GEYJ 221 V (220)	T	135.4/89.8
R91	7030008240	S.RES	ERJ12Y0R00U	B	84.1/45.2
R92	7030008240	S.RES	ERJ12Y0R00U	B	152.8/97.2
R93	7030003430	S.RES	ERJ3GEYJ 821 V (820)	B	97.6/51.4
R94	7030004030	S.RES	ERJ3GEYJ 5R6 V (5.6)	B	96.9/53.7
R95	7030003430	S.RES	ERJ3GEYJ 821 V (820)	B	97.6/55.9
R96	7030003370	S.RES	ERJ3GEYJ 271 V (270)	B	146.5/86.5
R97	7030003230	S.RES	ERJ3GEYJ 180 V (18)	B	149.1/89.1
R98	7030003370	S.RES	ERJ3GEYJ 271 V (270)	B	149.8/86.5
R101	7030003860	S.RES	ERJ3GE JPW V	T	117.9/107.4
R108	7030003440	S.RES	ERJ3GEYJ 102 V (1K)	T	115.2/105.4
R109	7030003440	S.RES	ERJ3GEYJ 102 V (1K)	T	117.3/99.8
R110	7030003440	S.RES	ERJ3GEYJ 102 V (1K)	T	117.3/98.6

M.=Mounted side (T: Mounted on the Top side, B: Mounted on the Bottom side)
S.=Surface mount

[PLL UNIT]

REF NO.	PARTS NO.	DESCRIPTION	M.	H/V LOCATION
R111	7030003440	S.RES ERJ3GEYJ 102 V (1K)	T	117.3/97.4
R112	7030003440	S.RES ERJ3GEYJ 102 V (1K)	T	115.3/94.6
R113	7030003510	S.RES ERJ3GEYJ 392 V (3.9K)	T	104.8/96.9
R114	7030003320	S.RES ERJ3GEYJ 101 V (100)	B	101.5/99.9
R115	7030003320	S.RES ERJ3GEYJ 101 V (100)	B	103.1/100.7
R116	7030003440	S.RES ERJ3GEYJ 102 V (1K)	T	105.9/108
R131	7030003320	S.RES ERJ3GEYJ 101 V (100)	T	93.1/76.3
R133	7030003350	S.RES ERJ3GEYJ 181 V (180)	T	93.9/78.2
R152	7030003400	S.RES ERJ3GEYJ 471 V (470)	T	124.6/105.3
R154	7030003320	S.RES ERJ3GEYJ 101 V (100)	B	115/101
R155	7030003480	S.RES ERJ3GEYJ 222 V (2.2K)	B	125/104.4
R157	7030003360	S.RES ERJ3GEYJ 221 V (220)	B	121.7/103.5
R158	7030003560	S.RES ERJ3GEYJ 103 V (10K)	B	120.7/107.2
R159	7030003200	S.RES ERJ3GEYJ 100 V (10)	T	85.5/67.3
R160	7030003370	S.RES ERJ3GEYJ 271 V (270)	T	84.7/69.4
R161	7030003640	S.RES ERJ3GEYJ 473 V (47K)	T	82.7/72.1
R181	7030003440	S.RES ERJ3GEYJ 102 V (1K)	T	55.8/78
R182	7030003530	S.RES ERJ3GEYJ 562 V (5.6K)	T	53.8/80.1
R191	7030003320	S.RES ERJ3GEYJ 101 V (100)	T	75.7/39.8
R192	7030003480	S.RES ERJ3GEYJ 222 V (2.2K)	T	77.6/39
R193	7030003440	S.RES ERJ3GEYJ 102 V (1K)	T	78.2/34.6
R202	7030003860	S.RES ERJ3GE JPW V	T	61.9/88.1
R203	7030006521	S.RES ERA3YED 561V (560)	T	73.7/104.9
R204	7030003560	S.RES ERJ3GEYJ 103 V (10K)	T	72.4/99.5
R222	7030009841	S.RES ERA3YHD 330V (33)	T	45/88.1
R223	7030009861	S.RES ERA3YED 471V (470)	T	56.9/104.9
R224	7030003560	S.RES ERJ3GEYJ 103 V (10K)	T	55.5/99.5
R252	7030009851	S.RES ERA3YED 271V (270)	T	28.3/88.1
R253	7030006521	S.RES ERA3YED 561V (560)	T	40.1/104.9
R254	7030003560	S.RES ERJ3GEYJ 103 V (10K)	T	38.8/99.5
R272	7030006521	S.RES ERA3YED 561V (560)	T	12.3/87.9
R273	7030006521	S.RES ERA3YED 561V (560)	T	23.3/104.9
R274	7030003560	S.RES ERJ3GEYJ 103 V (10K)	T	22/99.6
R275	7030003280	S.RES ERJ3GEYJ 470 V (47)	T	30.6/77.9
R281	7030008240	S.RES ERJ12Y0R00U	B	33.1/92.5
R282	7030008240	S.RES ERJ12Y0R00U	B	49.7/92.5
R283	7030008240	S.RES ERJ12Y0R00U	B	66.4/92.5
R284	7030008240	S.RES ERJ12Y0R00U	B	78.2/106.7
R301	7030003470	S.RES ERJ3GEYJ 182 V (1.8K)	T	33.2/77.9
R302	7030003480	S.RES ERJ3GEYJ 222 V (2.2K)	T	31.2/76.1
R303	7030003440	S.RES ERJ3GEYJ 102 V (1K)	T	38.8/74.2
R304	7030003260	S.RES ERJ3GEYJ 330 V (33)	T	31.7/71.5
R305	7030003860	S.RES ERJ3GE JPW V	T	45.1/74.2
R309	7030003410	S.RES ERJ3GEYJ 561 V (560)	T	63.4/67.5
R321	7030003860	S.RES ERJ3GE JPW V	T	45.1/71.5
R323	7030003200	S.RES ERJ3GEYJ 100 V (10)	T	40.4/63.6
R352	7030003410	S.RES ERJ3GEYJ 561 V (560)	T	14.2/78.3
R353	7030007860	S.RES ERJ3GEYJ 8R2V (8.2)	T	13.5/75.2
R354	7030003410	S.RES ERJ3GEYJ 561 V (560)	T	12.3/75.2
R361	7030003440	S.RES ERJ3GEYJ 102 V (1K)	B	25.6/73.2
R362	7030003320	S.RES ERJ3GEYJ 101 V (100)	B	21.7/74.2
R363	7030003560	S.RES ERJ3GEYJ 103 V (10K)	B	20/75
R380	7030003560	S.RES ERJ3GEYJ 103 V (10K)	T	71/66.2
R385	7030003440	S.RES ERJ3GEYJ 102 V (1K)	T	75.5/68.1
R386	7030003440	S.RES ERJ3GEYJ 102 V (1K)	T	75.6/69.3
R387	7030003360	S.RES ERJ3GEYJ 221 V (220)	T	75.5/70.5
R392	7030003860	S.RES ERJ3GE JPW V	T	68/74.5
R393	7030009961	S.RES ERA3YED 221V (220)	T	69.3/74.5
R394	7030007230	S.RES ERA3YED 102V (1K)	T	66/73.8
R401	7030007220	S.RES ERA3YED 202V (2K)	T	115.7/28.7
R402	7030007220	S.RES ERA3YED 202V (2K)	T	114.4/28.7
R403	7030007230	S.RES ERA3YED 102V (1K)	T	115.1/30.8
R404	7030007220	S.RES ERA3YED 202V (2K)	T	112.1/27.4
R405	7030007230	S.RES ERA3YED 102V (1K)	T	113/29.4
R406	7030007220	S.RES ERA3YED 202V (2K)	T	110.3/27.2
R407	7030007230	S.RES ERA3YED 102V (1K)	T	110.9/29.3
R408	7030007220	S.RES ERA3YED 202V (2K)	T	109/27.2
R409	7030007230	S.RES ERA3YED 102V (1K)	T	108.1/30.6
R410	7030007220	S.RES ERA3YED 202V (2K)	T	107.7/27.2
R411	7030007230	S.RES ERA3YED 102V (1K)	T	108.1/29.3
R412	7030007220	S.RES ERA3YED 202V (2K)	T	106.4/27.2
R413	7030007230	S.RES ERA3YED 102V (1K)	T	105.2/30.6
R414	7030007220	S.RES ERA3YED 202V (2K)	T	105.1/27.2
R415	7030007210	S.RES ERA3YEB 102V (1K)	T	105.2/29.3
R416	7030007200	S.RES ERA3YEB 202V (2K)	T	103.8/27.2
R417	7030007210	S.RES ERA3YEB 102V (1K)	T	102.3/30.6
R418	7030007200	S.RES ERA3YEB 202V (2K)	T	102.5/27.2
R419	7030007210	S.RES ERA3YEB 102V (1K)	T	102.3/29.3
R420	7030007200	S.RES ERA3YEB 202V (2K)	T	101.2/27.2
R421	7030007210	S.RES ERA3YEB 102V (1K)	T	99.4/30.6
R422	7030007200	S.RES ERA3YEB 202V (2K)	T	99.9/27.2
R423	7030007210	S.RES ERA3YEB 102V (1K)	T	99.4/29.3
R424	7030007200	S.RES ERA3YEB 202V (2K)	T	98.6/27.2
R425	7030009861	S.RES ERA3YED 471V (470)	T	97.3/27.2
R427	7030003800	S.RES ERJ3GEYJ 105 V (1M)	T	92.9/9.2
R428	7030003320	S.RES ERJ3GEYJ 101 V (100)	B	115.9/3.9
R430	7030003200	S.RES ERJ3GEYJ 100 V (10)	T	88.1/11.3
R431	7030003320	S.RES ERJ3GEYJ 101 V (100)	T	90/23.7
R432	7030003680	S.RES ERJ3GEYJ 104 V (100K)	T	95/23.9
R433	7030003360	S.RES ERJ3GEYJ 221 V (220)	T	92.1/16.4
R434	7030003240	S.RES ERJ3GEYJ 220 V (22)	T	89.4/16.4
R435	7030003330	S.RES ERJ3GEYJ 121 V (120)	T	97.1/2.8
R436	7030003220	S.RES ERJ3GEYJ 150 V (15)	T	94.5/2.8
R437	7030003680	S.RES ERJ3GEYJ 104 V (100K)	T	97.1/4.3
R438	7030003320	S.RES ERJ3GEYJ 101 V (100)	B	91.7/11
R439	7030003650	S.RES ERJ3GEYJ 563 V (56K)	T	115.6/10.6
R440	7030003370	S.RES ERJ3GEYJ 271 V (270)	T	115.7/8.2
R441	7030003320	S.RES ERJ3GEYJ 101 V (100)	T	90.4/21.6
R442	7030003440	S.RES ERJ3GEYJ 102 V (1K)	B	99.6/6.5
R443	7030003440	S.RES ERJ3GEYJ 102 V (1K)	B	116.3/20.5
R444	7030003440	S.RES ERJ3GEYJ 102 V (1K)	B	114.7/20.5
R445	7030003440	S.RES ERJ3GEYJ 102 V (1K)	T	115/20.8
R446	7030003360	S.RES ERJ3GEYJ 221 V (220)	T	116.2/20
R447	7030003440	S.RES ERJ3GEYJ 102 V (1K)	B	100.4/14.9

[PLL UNIT]

REF NO.	PARTS NO.	DESCRIPTION	M.	H/V LOCATION
R448	7030003860	S.RES ERJ3GE JPW V	T	115.7/9.4
R449	7030003440	S.RES ERJ3GEYJ 102 V (1K)	T	115.2/5.1
R450	7030003560	S.RES ERJ3GEYJ 103 V (10K)	T	66.9/33.2
R451	7030005871	S.RES ERA3YKD 104V (100K)	T	64/46.2
R452	7030005871	S.RES ERA3YKD 104V (100K)	T	56.1/43.7
R453	7030003340	S.RES ERJ3GEYJ 151 V (150)	T	56.5/38.7
R454	7030003320	S.RES ERJ3GEYJ 101 V (100)	T	58.7/46.3
R455	7030003350	S.RES ERJ3GEYJ 181 V (180)	T	61.3/46.2
R456	7030003650	S.RES ERJ3GEYJ 563 V (56K)	T	60.1/33.1
R457	7030003360	S.RES ERJ3GEYJ 221 V (220)	T	54.2/34.8
R459	7030003220	S.RES ERJ3GEYJ 150 V (15)	T	57.1/31.9
R460	7030003220	S.RES ERJ3GEYJ 150 V (15)	T	55.2/31.2
R461	7030003310	S.RES ERJ3GEYJ 820 V (82)	T	58.9/31.2
R462	7030003320	S.RES ERJ3GEYJ 101 V (100)	T	115.9/15.6
R463	7030003640	S.RES ERJ3GEYJ 473 V (47K)	T	72.6/51.3
R464	7030003640	S.RES ERJ3GEYJ 473 V (47K)	T	71.3/52
R471	7030003860	S.RES ERJ3GE JPW V	T	89.8/18.3
R481	7030003440	S.RES ERJ3GEYJ 102 V (1K)	T	20.9/34.2
R482	7030003530	S.RES ERJ3GEYJ 562 V (5.6K)	T	19.6/32.4
R502	7030006521	S.RES ERA3YED 561V (560)	T	42.9/21.9
R503	7030006521	S.RES ERA3YED 561V (560)	T	31.1/5.1
R504	7030003560	S.RES ERJ3GEYJ 103 V (10K)	T	32.2/10.5
R522	7030009841	S.RES ERA3YHD 330V (33)	T	26/21.9
R523	7030009861	S.RES ERA3YED 471V (470)	T	14.2/5.1
R524	7030003560	S.RES ERJ3GEYJ 103 V (10K)	T	15.3/10.4
R552	7030009851	S.RES ERA3YED 271V (270)	T	59.7/21.8
R553	7030006521	S.RES ERA3YED 561V (560)	T	47.8/5.1
R554	7030003560	S.RES ERJ3GEYJ 103 V (10K)	T	48.9/10.4
R572	7030006521	S.RES ERA3YED 561V (560)	T	75.5/21.8
R573	7030006521	S.RES ERA3YED 561V (560)	T	64.6/5.1
R574	7030003560	S.RES ERJ3GEYJ 103 V (10K)	T	65.7/10.4
R575	7030003280	S.RES ERJ3GEYJ 470 V (47)	B	35/35.4
R581	7030008240	S.RES ERJ12Y0R00U	B	21.8/17.6
R582	7030008240	S.RES ERJ12Y0R00U	B	37.8/17.6
R583	7030008240	S.RES ERJ12Y0R00U	B	54.8/17.6
R601	7030003470	S.RES ERJ3GEYJ 182 V (1.8K)	T	38.7/37.4
R602	7030003480	S.RES ERJ3GEYJ 222 V (2.2K)	T	44.1/36.5
R603	7030003440	S.RES ERJ3GEYJ 102 V (1K)	T	44.1/38.9
R604	7030003260	S.RES ERJ3GEYJ 330 V (33)	B	40.7/39.7
R609	7030003860	S.RES ERJ3GE JPW V	T	18.7/40.4
R621	7030003860	S.RES ERJ3GE JPW V	T	41.9/47.3
R623	7030003200	S.RES ERJ3GEYJ 100 V (10)	T	31.2/47.4
R624	7030003860	S.RES ERJ3GE JPW V	T	36.5/48.1
R652	7030003370	S.RES ERJ3GEYJ 271 V (270)	T	5/27
R653	7030003230	S.RES ERJ3GEYJ 180 V (18)	T	5/22.9
R654	7030003370	S.RES ERJ3GEYJ 271 V (270)	T	3.7/24.1
R661	7030003440	S.RES ERJ3GEYJ 102 V (1K)	T	3.5/30.3
R662	7030003320	S.RES ERJ3GEYJ 101 V (100)	B	4.5/29.9
R663	7030003560	S.RES ERJ3GEYJ 103 V (10K)	B	2.1/29.6
R680	7030003560	S.RES ERJ3GEYJ 103 V (10K)	B	41.4/46.8
R685	7030003440	S.RES ERJ3GEYJ 102 V (1K)	T	23.5/41.7
R686	7030003440	S.RES ERJ3GEYJ 102 V (1K)	T	23.5/40.5
R687	7030003360	S.RES ERJ3GEYJ 221 V (220)	T	23.5/39.3
R692	7030003860	S.RES ERJ3GE JPW V	T	25.2/34.7
R693	7030009651	S.RES ERA3YHD 820V (82)	T	28.2/34.7
R694	7030007230	S.RES ERA3YED 102V (1K)	T	29.5/34.5
R701	7030007200	S.RES ERA3YEB 202V (2K)	T	135.4/5.4
R702	7030007210	S.RES ERA3YEB 102V (1K)	T	134.6/3.4
R703	7030007200	S.RES ERA3YEB 202V (2K)	T	134.1/5.4
R704	7030007210	S.RES ERA3YEB 102V (1K)	T	133.3/2.1
R705	7030007200	S.RES ERA3YEB 202V (2K)	T	132.8/5.4
R706	7030007210	S.RES ERA3YEB 102V (1K)	T	132/3.4
R707	7030007220	S.RES ERA3YED 202V (2K)	T	131.5/5.4
R708	7030007230	S.RES ERA3YED 102V (1K)	T	130.7/2.1
R709	7030007220	S.RES ERA3YED 202V (2K)	T	130.2/5.5
R710	7030007230	S.RES ERA3YED 102V (1K)	T	129.4/3.6
R711	7030007220	S.RES ERA3YED 202V (2K)	T	128.9/5.5
R712	7030007230	S.RES ERA3YED 102V (1K)	T	128.1/2.3
R713	7030007220	S.RES ERA3YED 202V (2K)	T	127.6/5.5
R714	7030007230	S.RES ERA3YED 102V (1K)	T	126.8/3.6
R715	7030007220	S.RES ERA3YED 202V (2K)	T	126.3/5.5
R716	7030007230	S.RES ERA3YED 102V (1K)	T	124.4/2.3
R717	7030007220	S.RES ERA3YED 202V (2K)	T	125/5.5
R718	7030007230	S.RES ERA3YED 102V (1K)	T	124.2/3.6
R719	7030007220	S.RES ERA3YED 202V (2K)	T	123.7/5.5
R720	7030007220	S.RES ERA3YED 202V (2K)	T	122.4/5.5
R721	7030003650	S.RES ERJ3GEYJ 563 V (56K)	B	124.9/14.6
R722	7030003370	S.RES ERJ3GEYJ 271 V (270)	B	124.9/16.7
R724	7030003460	S.RES ERJ3GEYJ 152 V (1.5K)	T	145/10.8
R726	7030003520	S.RES ERJ3GEYJ 472 V (4.7K)	T	143.9/17.8
R727	7030003440	S.RES ERJ3GEYJ 102 V (1K)	T	127.8/23.7
R728	7030003440	S.RES ERJ3GEYJ 102 V (1K)	T	126.6/23.7
R729	7030003360	S.RES ERJ3GEYJ 221 V (220)	T	129/23.7
R730	7030003440	S.RES ERJ3GEYJ 102 V (1K)	T	139.6/15.4
R731	7030003470	S.RES ERJ3GEYJ 182 V (1.8K)	T	142/17.3
R732	7030003340	S.RES ERJ3GEYJ 151 V (150)	T	144.6/19.8
R734	7030003340	S.RES ERJ3GEYJ 151 V (150)	B	148.1/15.4
R735	7030003360	S.RES ERJ3GEYJ 221 V (220)	B	150.4/14.6
R736	7030003320	S.RES ERJ3GEYJ 101 V (100)	B	124.9/20.9
R801	7030003260	S.RES ERJ3GEYJ 330 V (33)	T	125.6/50.4
R802	7030003320	S.RES ERJ3GEYJ 101 V (100)	T	125.6/45.2
R803	7030003500	S.RES ERJ3GEYJ 332 V (3.3K)	T	130.3/47
R804	7030003540	S.RES ERJ3GEYJ 682 V (6.8K)	T	133.4/47.7
R805	7030003370	S.RES ERJ3GEYJ 271 V (270)	B	128.5/37.1
R806	7030003230	S.RES ERJ3GEYJ 180 V (18)	B	126.4/36.3
R807	7030003370	S.RES ERJ3GEYJ 271 V (270)	B	124.3/35.5
R808	7030003350	S.RES ERJ3GEYJ 181 V (180)	T	128.7/43.7
R811	7030003370	S.RES ERJ3GEYJ 271 V (270)	T	143.5/22.4
R812	7030003230	S.RES ERJ3GEYJ 180 V (18)	T	140.4/23.1
R813	7030003370	S.RES ERJ3GEYJ 271 V (270)	T	143.5/23.7
R831	7030003330	S.RES ERJ3GEYJ 121 V (120)	B	141.5/35.7
R832	7030003280	S.RES ERJ3GEYJ 470 V (47)	B	139.4/36.3
R833	7030003330	S.RES ERJ3GEYJ 121 V (120)	B	141.5/37.1
R834	7030003380	S.RES ERJ3GEYJ 331 V (330)	T	152.2/38.1

M.=Mounted side (T: Mounted on the Top side, B: Mounted on the Bottom side)
S.=Surface mount

[PLL UNIT]

REF NO.	PARTS NO.	DESCRIPTION	M.	H/V LOCATION
R835	7030003320	S.RES ERJ3GEYJ 101 V (100)	B	154/36.4
R836	7030003370	S.RES ERJ3GEYJ 271 V (270)	B	149.5/27.7
R837	7030003230	S.RES ERJ3GEYJ 180 V (18)	B	148.8/25.4
R838	7030003370	S.RES ERJ3GEYJ 271 V (270)	B	150.4/25.4
R851	7030003860	S.RES ERJ3GE JPW V	T	141/51.5
R852	7030003860	S.RES ERJ3GE JPW V	B	111.2/57.4
R1201	7030003490	S.RES ERJ3GEYJ 272 V (2.7K)	T	38.9/63.6
R1202	7030003470	S.RES ERJ3GEYJ 182 V (1.8K)	T	37.5/62.1
R1205	7030003860	S.RES ERJ3GE JPW V	T	2.4/60.4
R1221	7030003640	S.RES ERJ3GEYJ 473 V (47K)	B	19.5/69.9
R1222	7030003320	S.RES ERJ3GEYJ 101 V (100)	T	23/73.4
R1223	7030003440	S.RES ERJ3GEYJ 102 V (1K)	T	25.1/72.9
R1224	7030003440	S.RES ERJ3GEYJ 102 V (1K)	T	34.3/62.4
R1521	7030003560	S.RES ERJ3GEYJ 103 V (10K)	B	19.6/66.5
R2201	7030003490	S.RES ERJ3GEYJ 272 V (2.7K)	T	25.4/47.7
R2202	7030003470	S.RES ERJ3GEYJ 182 V (1.8K)	T	23/47.7
R2205	7030003860	S.RES ERJ3GE JPW V	T	2.4/49.7
R2221	7030003640	S.RES ERJ3GEYJ 473 V (47K)	T	8/41.3
R2222	7030003320	S.RES ERJ3GEYJ 101 V (100)	B	3.3/36.8
R2223	7030003440	S.RES ERJ3GEYJ 102 V (1K)	B	3.3/34.1
R2224	7030003440	S.RES ERJ3GEYJ 102 V (1K)	T	14.3/43.6
R2512	7030003560	S.RES ERJ3GEYJ 103 V (10K)	B	5.7/41
C1	4030007130	S.CER C1608 CH 1H 101J-T	T	153.7/79.5
C2	4030007130	S.CER C1608 CH 1H 101J-T	T	141.8/78.5
C3	4030007130	S.CER C1608 CH 1H 101J-T	T	153.7/77.5
C5	4030006900	S.CER C1608 JB 1H 103K-T	T	153.7/73.5
C6	4030006900	S.CER C1608 JB 1H 103K-T	T	141.8/72.5
C7	4030006900	S.CER C1608 JB 1H 103K-T	T	153.7/71.5
C8	4030006900	S.CER C1608 JB 1H 103K-T	T	141.8/70.5
C9	4030006900	S.CER C1608 JB 1H 103K-T	T	153.4/67.5
C10	4030006900	S.CER C1608 JB 1H 103K-T	T	141.4/64.8
C11	4030006900	S.CER C1608 JB 1H 103K-T	B	141.8/63.9
C12	4030006900	S.CER C1608 JB 1H 103K-T	T	153.5/61.5
C13	4030006900	S.CER C1608 JB 1H 103K-T	T	143.6/59.1
C14	4030019500	S.CER GRM21BB31A106KE18 (GRM40 B)	B	90.5/60.1
C15	4030011600	S.CER C1608 JB 1E 104K-T	B	92.4/64.1
C16	4030011600	S.CER C1608 JB 1E 104K-T	B	96.5/64.1
C17	4030019500	S.CER GRM21BB31A106KE18 (GRM40 B)	B	98.4/60.7
C18	4030011600	S.CER C1608 JB 1E 104K-T	T	131/58.1
C19	4030011600	S.CER C1608 JB 1E 104K-T	T	124.9/70.5
C20	4030011600	S.CER C1608 JB 1E 104K-T	T	136.6/80.8
C22	4030006900	S.CER C1608 JB 1H 103K-T	B	130.6/75
C23	4030006900	S.CER C1608 JB 1H 103K-T	T	125.8/72.4
C24	4030006900	S.CER C1608 JB 1H 103K-T	B	128.2/74
C25	4030006900	S.CER C1608 JB 1H 103K-T	B	128.2/75.6
C26	4030006900	S.CER C1608 JB 1H 103K-T	T	127.8/70.8
C51	4030007070	S.CER C1608 CH 1H 330J-T	T	94.4/40.8
C52	4030006900	S.CER C1608 JB 1H 103K-T	T	95.7/42.3
C53	4030006860	S.CER C1608 JB 1H 102K-T	T	99.1/38.8
C54	4030006900	S.CER C1608 JB 1H 103K-T	T	102.3/38.5
C55	4030007120	S.CER C1608 CH 1H 820J-T	T	104.7/38.5
C56	4030007040	S.CER C1608 CH 1H 180J-T	T	105.8/40.6
C57	4030007120	S.CER C1608 CH 1H 820J-T	T	105.9/38.5
C58	4030006900	S.CER C1608 JB 1H 103K-T	T	107.8/41.3
C61	4030007170	S.CER C1608 CH 1H 221J-T	T	109.7/39.3
C62	4030007050	S.CER C1608 CH 1H 220J-T	B	115.1/43.4
C63	4030006900	S.CER C1608 JB 1H 103K-T	T	109.7/44.6
C64	4030009510	S.CER C1608 CH 1H 010B-T	T	114.9/45.7
C65	4030007050	S.CER C1608 CH 1H 220J-T	T	114.9/48.5
C67	4030006900	S.CER C1608 JB 1H 103K-T	T	112.9/50.9
C75	4030006900	S.CER C1608 JB 1H 103K-T	T	107.3/52.1
C76	4030007090	S.CER C1608 CH 1H 470J-T	T	103.8/55.2
C77	4030007000	S.CER C1608 CH 1H 090D-T	T	103/53.3
C78	4030007120	S.CER C1608 CH 1H 820J-T	T	102.5/55.2
C79	4030009910	S.CER C1608 CH 1H 040B-T	T	100.4/52
C80	4030007100	S.CER C1608 CH 1H 560J-T	T	99.9/55.2
C83	4030007100	S.CER C1608 CH 1H 560J-T	T	99.3/53.3
C84	4030007170	S.CER C1608 CH 1H 221J-T	T	97.3/54.1
C85	4030007100	S.CER C1608 CH 1H 560J-T	T	98/51.5
C86	4030006900	S.CER C1608 JB 1H 103K-T	B	95.3/53.7
C87	4030006900	S.CER C1608 JB 1H 103K-T	T	105.2/49.3
C88	4030006900	S.CER C1608 JB 1H 103K-T	T	130.8/90.6
C89	4030011600	S.CER C1608 JB 1E 104K-T	T	129.6/85.3
C90	4030011600	S.CER C1608 JB 1E 104K-T	T	133.5/90.1
C92	4030007000	S.CER C1608 CH 1H 090D-T	T	136.7/87.2
C93	4030007090	S.CER C1608 CH 1H 470J-T	T	136.7/89.8
C94	4030007120	S.CER C1608 CH 1H 820J-T	T	138.1/89.8
C95	4030009910	S.CER C1608 CH 1H 040B-T	T	138.8/87.8
C96	4030007100	S.CER C1608 CH 1H 560J-T	T	141.6/87.8
C97	4030007170	S.CER C1608 CH 1H 221J-T	T	143.7/88.5
C98	4030007100	S.CER C1608 CH 1H 560J-T	T	145.1/88.5
C99	4030007100	S.CER C1608 CH 1H 560J-T	T	139.5/89.8
C101	4550007090	S.TAN TEESVA 1A 226M8R	B	109.4/84.1
C102	4030011600	S.CER C1608 JB 1E 104K-T	T	115.3/89
C103	4030011600	S.CER C1608 JB 1E 104K-T	B	106/101
C105	4030011600	S.CER C1608 JB 1E 104K-T	T	106/106.7
C106	4030011600	S.CER C1608 JB 1E 104K-T	T	108.5/108
C107	4030011600	S.CER C1608 JB 1E 104K-T	T	114.2/106.9
C108	4030011600	S.CER C1608 JB 1E 104K-T	T	112/107.4
C109	4030011600	S.CER C1608 JB 1E 104K-T	T	110.6/107.6
C110	4030011600	S.CER C1608 JB 1E 104K-T	T	103.7/103.3
C111	4030011600	S.CER C1608 JB 1E 104K-T	T	105.6/104.7
C112	4030011600	S.CER C1608 JB 1E 104K-T	T	104.2/101.4
C113	4030011600	S.CER C1608 JB 1E 104K-T	T	103/98.6
C114	4030011600	S.CER C1608 JB 1E 104K-T	T	107.1/93.8
C115	4030011600	S.CER C1608 JB 1E 104K-T	T	108.6/93.8
C119	4030011600	S.CER C1608 JB 1E 104K-T	T	104.8/95.7
C120	4030011600	S.CER C1608 JB 1E 104K-T	T	123.8/91.7
C121	4030011600	S.CER C1608 JB 1E 104K-T	T	113.2/86.3

[PLL UNIT]

REF NO.	PARTS NO.	DESCRIPTION	M.	H/V LOCATION
C122	4030019500	S.CER GRM21BB31A106KE18 (GRM40 B)	B	114.3/91.2
C123	4030011600	S.CER C1608 JB 1E 104K-T	T	113.3/90.3
C124	4030019500	S.CER GRM21BB31A106KE18 (GRM40 B)	B	114.5/94.8
C128	4030007140	S.CER C1608 CH 1H 121J-T	T	98.7/88.3
C129	4030007060	S.CER C1608 CH 1H 270J-T	B	102.2/96.9
C132	4030006900	S.CER C1608 JB 1H 103K-T	B	82.2/99.7
C133	4030006900	S.CER C1608 JB 1H 103K-T	B	81.7/92.5
C134	4030006900	S.CER C1608 JB 1H 103K-T	T	82.2/98.1
C137	4030006900	S.CER C1608 JB 1H 103K-T	B	85.6/100
C138	4030006900	S.CER C1608 JB 1H 103K-T	B	83.7/92.9
C139	4030006900	S.CER C1608 JB 1H 103K-T	T	83.4/98.1
C146	4030006900	S.CER C1608 JB 1H 103K-T	T	82.2/93.3
C147	4030006900	S.CER C1608 JB 1H 103K-T	T	83.4/93.3
C150	4030006900	S.CER C1608 JB 1H 103K-T	T	81.7/88.3
C151	4030006900	S.CER C1608 JB 1H 103K-T	B	122.9/107.2
C152	4030006900	S.CER C1608 JB 1H 103K-T	B	115.7/103.2
C153	4030007130	S.CER C1608 CH 1H 101J-T	B	110.8/105.8
C154	4030006900	S.CER C1608 JB 1H 103K-T	B	123.3/103.4
C155	4030006860	S.CER C1608 JB 1H 102K-T	T	94.9/94.3
C156	4030017800	S.CER C1608 CH 1H 561J-T	T	100.5/95.7
C157	4030011340	S.CER C1608 CH 1H 471J-T	T	100.8/88.3
C161	4030007070	S.CER C1608 CH 1H 330J-T	B	110.1/107.7
C163	4030006900	S.CER C1608 JB 1H 103K-T	T	82.6/68.3
C164	4030006900	S.CER C1608 JB 1H 103K-T	T	83.5/73.9
C165	4030010760	S.CER C1608 CH 1H 331J-T	T	91.2/78.6
C166	4030011280	S.CER C1608 CH 1H 271J-T	T	89.1/78.6
C167	4030010760	S.CER C1608 CH 1H 331J-T	T	82/64
C168	4030011280	S.CER C1608 CH 1H 271J-T	T	80.7/63.3
C181	4030006900	S.CER C1608 JB 1H 103K-T	T	51.3/77.5
C182	4550007520	S.TAN F931A106MAABMA	B	53.1/75.2
C183	4340000290	S.MYL ECHU 1C 103JX5	T	50.1/79.1
C184	4550007470	S.TAN F931A107MNMBMA	B	50.6/78.6
C192	4030011600	S.CER C1608 JB 1E 104K-T	T	75.7/36.9
C201	4340000290	S.MYL ECHU 1C 103JX5	T	64.7/86.4
C202	4030009990	S.CER C1608 CH 1H 200J-T	T	68.8/89.6
C203	4030006900	S.CER C1608 JB 1H 103K-T	T	64.2/94.4
C204	4030011340	S.CER C1608 CH 1H 471J-T	T	63.2/88.1
C205	4030006900	S.CER C1608 JB 1H 103K-T	T	73.7/106.1
C206	4030009500	S.CER C1608 CH 1H 0R5B-T	B	68.9/94.1
C207	4030006900	S.CER C1608 JB 1H 103K-T	T	74.3/100.1
C208	4610001860	S.TRI TZB4Z060AB10R00 (TZBX4Z060BA110)	T	70.8/92.6
C209	4030009350	S.CER C1608 CH 1H 3R5B-T	T	74.5/94.1
C222	4030007100	S.CER C1608 CH 1H 560J-T	T	51.6/89.7
C223	4030006900	S.CER C1608 JB 1H 103K-T	T	47.4/94.4
C224	4030011340	S.CER C1608 CH 1H 471J-T	T	46.3/88.1
C225	4030006900	S.CER C1608 JB 1H 103K-T	T	56.9/106.1
C226	4030009510	S.CER C1608 CH 1H 010B-T	B	52.4/94.1
C227	4030006900	S.CER C1608 JB 1H 103K-T	T	57.4/100.1
C228	4610001830	S.TRI TZB4S100AB10R00 (TZBX4N100BA110)	T	53.9/92.6
C229	4030009920	S.CER C1608 CH 1H 050B-T	T	57.7/94.1
C252	4030007150	S.CER C1608 CH 1H 151J-T	T	34.3/89.7
C253	4030006900	S.CER C1608 JB 1H 103K-T	T	30.6/94.4
C254	4030011340	S.CER C1608 CH 1H 471J-T	T	29.6/88.1
C255	4030006900	S.CER C1608 JB 1H 103K-T	T	40/106.1
C256	4030009510	S.CER C1608 CH 1H 010B-T	B	36.1/94.1
C257	4030006900	S.CER C1608 JB 1H 103K-T	T	40.8/100.1
C258	4610001830	S.TRI TZB4S100AB10R00 (TZBX4N100BA110)	T	36.8/92.6
C259	4030011770	S.CER C1608 CH 1H 060B-T	T	41/94.1
C272	4030007130	S.CER C1608 CH 1H 101J-T	T	17.6/89.7
C273	4030006900	S.CER C1608 JB 1H 103K-T	T	13.8/94.4
C274	4030011340	S.CER C1608 CH 1H 471J-T	T	11/87.9
C275	4030006900	S.CER C1608 JB 1H 103K-T	T	23.3/106.1
C276	4030009510	S.CER C1608 CH 1H 010B-T	B	18.3/94.1
C277	4030006900	S.CER C1608 JB 1H 103K-T	T	23.9/100.1
C278	4610001830	S.TRI TZB4S100AB10R00 (TZBX4N100BA110)	T	19.8/92.6
C279	4030007020	S.CER C1608 CH 1H 120J-T	T	24.2/94.1
C301	4030006900	S.CER C1608 JB 1H 103K-T	T	35.2/75.3
C302	4030007080	S.CER C1608 CH 1H 390J-T	T	37.1/76.1
C309	4030006900	S.CER C1608 JB 1H 103K-T	T	29.8/72.2
C310	4030006900	S.CER C1608 JB 1H 103K-T	T	29.8/70.7
C320	4030007080	S.CER C1608 CH 1H 390J-T	T	39.7/77.3
C321	4030007120	S.CER C1608 CH 1H 820J-T	T	39.7/76.1
C322	4030006900	S.CER C1608 JB 1H 103K-T	T	43.9/70.2
C323	4030006900	S.CER C1608 JB 1H 103K-T	T	40.7/66.7
C324	4030006900	S.CER C1608 JB 1H 103K-T	T	44.6/63.1
C326	4030011600	S.CER C1608 JB 1E 104K-T	T	44.6/64.3
C328	4030006990	S.CER C1608 CH 1H 080D-T	T	41.5/75.4
C329	4030007060	S.CER C1608 CH 1H 270J-T	T	42.7/75.4
C330	4030006990	S.CER C1608 CH 1H 080D-T	T	43.2/73.5
C345	4030006900	S.CER C1608 JB 1H 103K-T	B	23.6/76.8
C361	4030006900	S.CER C1608 JB 1H 103K-T	T	14.2/77.1
C362	4030006900	S.CER C1608 JB 1H 103K-T	T	28.1/74.1
C363	4030006900	S.CER C1608 JB 1H 103K-T	T	12.3/77.8
C364	4030006900	S.CER C1608 JB 1H 103K-T	B	23.2/73.9
C381	4030006900	S.CER C1608 JB 1H 103K-T	T	67.3/66.8
C382	4030007130	S.CER C1608 CH 1H 101J-T	T	65.3/68.3
C386	4550005980	S.TAN TEESVA 1A 475M8R	T	67.9/76.8
C387	4030006900	S.CER C1608 JB 1H 103K-T	T	72.2/74.9
C389	4030011340	S.CER C1608 CH 1H 471J-T	T	72.2/73.7
C392	4030006900	S.CER C1608 JB 1H 103K-T	T	72.9/66.8
C393	4340000290	S.MYL ECHU 1C 103JX5	T	63/74.2
C394	4030011340	S.CER C1608 CH 1H 471J-T	T	63.2/75.7
C395	4030006900	S.CER C1608 JB 1H 103K-T	T	65.3/70.9
C396	4030019500	S.CER GRM21BB31A106KE18 (GRM40 B)	B	66.4/68.6
C401	4030019500	S.CER GRM21BB31A106KE18 (GRM40 B)	B	97.9/10.6
C402	4030011600	S.CER C1608 JB 1E 104K-T	T	112.9/21.7

M.=Mounted side (T: Mounted on the Top side, B: Mounted on the Bottom side)
S.=Surface mount

[PLL UNIT]

REF NO.	PARTS NO.	DESCRIPTION	M.	H/V LOCATION
C403	4030011600	S.CER C1608 JB 1E 104K-T	T	100.1/24
C404	4030011600	S.CER C1608 JB 1E 104K-T	B	99.4/22.2
C405	4030011600	S.CER C1608 JB 1E 104K-T	T	94.6/18
C406	4030011600	S.CER C1608 JB 1E 104K-T	T	94.6/15.2
C407	4030011600	S.CER C1608 JB 1E 104K-T	T	93.8/13
C408	4030011600	S.CER C1608 JB 1E 104K-T	T	94.8/11.1
C409	4030006900	S.CER C1608 JB 1H 103K-T	T	99.2/3.6
C410	4030011600	S.CER C1608 JB 1E 104K-T	B	96.9/7.1
C411	4030011600	S.CER C1608 JB 1E 104K-T	T	100.5/3.2
C412	4030011600	S.CER C1608 JB 1E 104K-T	T	103.9/3.5
C413	4550007470	S.TAN F931A107MNMBMA	B	95.7/17.7
C414	4030011600	S.CER C1608 JB 1E 104K-T	T	113.6/11.3
C415	4030011600	S.CER C1608 JB 1E 104K-T	T	112.9/20.5
C416	4030011600	S.CER C1608 JB 1E 104K-T	T	97.3/30.1
C417	4030011600	S.CER C1608 JB 1E 104K-T	T	88.5/27.4
C418	4030011600	S.CER C1608 JB 1E 104K-T	T	90/11.8
C419	4030006900	S.CER C1608 JB 1H 103K-T	T	93.1/22.8
C420	4030011600	S.CER C1608 JB 1E 104K-T	T	91.7/17.6
C421	4550007520	S.TAN F931A106MAABMA	B	93.4/6.4
C422	4030006900	S.CER C1608 JB 1H 103K-T	T	115.9/14.4
C423	4030006900	S.CER C1608 JB 1H 103K-T	T	106.1/3
C424	4030006900	S.CER C1608 JB 1H 103K-T	B	106.3/8.7
C425	4030006900	S.CER C1608 JB 1H 103K-T	B	106.5/10.2
C426	4030006900	S.CER C1608 JB 1H 103K-T	T	108.4/3.2
C427	4030006900	S.CER C1608 JB 1H 103K-T	T	110.3/3.9
C428	4030006900	S.CER C1608 JB 1H 103K-T	T	110.3/2.7
C429	4030011600	S.CER C1608 JB 1E 104K-T	B	96.2/8.5
C430	4030011600	S.CER C1608 JB 1E 104K-T	T	113.5/8.4
C431	4030011600	S.CER C1608 JB 1E 104K-T	T	113.6/13.9
C432	4030006900	S.CER C1608 JB 1H 103K-T	B	81.4/10.2
C433	4030006900	S.CER C1608 JB 1H 103K-T	B	79.1/5.7
C434	4030006900	S.CER C1608 JB 1H 103K-T	B	79.1/1.7
C435	4030011600	S.CER C1608 JB 1E 104K-T	T	90.6/13.7
C436	4030006900	S.CER C1608 JB 1H 103K-T	T	91.8/13.7
C437	4030006900	S.CER C1608 JB 1H 103K-T	T	83.5/18.5
C438	4030006900	S.CER C1608 JB 1H 103K-T	T	83.5/10.5
C439	4030006900	S.CER C1608 JB 1H 103K-T	T	81.8/3.1
C440	4030011600	S.CER C1608 JB 1E 104K-T	T	93.9/7.2
C441	4030006900	S.CER C1608 JB 1H 103K-T	T	117.1/6
C444	4030011600	S.CER C1608 JB 1E 104K-T	T	116.2/3.2
C445	4030011600	S.CER C1608 JB 1E 104K-T	T	113.4/5.8
C446	4030006900	S.CER C1608 JB 1H 103K-T	B	77.5/1.9
C447	4030006900	S.CER C1608 JB 1H 103K-T	T	83.5/8.7
C450	4030006900	S.CER C1608 JB 1H 103K-T	T	83.5/23.3
C451	4030006900	S.CER C1608 JB 1H 103K-T	T	65.1/32
C452	4030007070	S.CER C1608 CH 1H 330J-T	T	68.2/35.1
C453	4030009910	S.CER C1608 CH 1H 040B-T	T	65.5/35.1
C454	4610001850	S.TRI TZB4R200AB10R00 (TZBX4R200BA110)	T	61.2/39.4
C455	4030016550	S.CER CM105 CH 151G 50AT	T	64.7/43
C456	4030016550	S.CER CM105 CH 151G 50AT	T	58.7/43.7
C457	4030016550	S.CER CM105 CH 151G 50AT	T	57.4/43
C458	4030019500	S.CER GRM21BB31A106KE18 (GRM40 B)	T	55.5/46.2
C459	4030006900	S.CER C1608 JB 1H 103K-T	T	54.8/44.1
C460	4030006900	S.CER C1608 JB 1H 103K-T	T	63.4/44.3
C461	4030009920	S.CER C1608 CH 1H 050B-T	B	58.4/35
C462	4030011600	S.CER C1608 JB 1E 104K-T	T	54.7/36.7
C463	4030006900	S.CER C1608 JB 1H 103K-T	T	55.5/33.1
C464	4030006900	S.CER C1608 JB 1H 103K-T	T	74.5/51.3
C465	4030007160	S.CER C1608 CH 1H 181J-T	T	56.7/36.8
C466	4030007150	S.CER C1608 CH 1H 151J-T	T	58/36.8
C467	4030011600	S.CER C1608 JB 1E 104K-T	B	68.9/50.1
C472	4030006990	S.CER C1608 CH 1H 080D-T	B	104.8/22.5
C473	4030007030	S.CER C1608 CH 1H 150J-T	B	103/21.7
C474	4030007060	S.CER C1608 CH 1H 270J-T	B	101.2/22.5
C481	4030006900	S.CER C1608 JB 1H 103K-T	T	19.7/34.2
C482	4550007520	S.TAN F931A106MAABMA	B	18.4/31.7
C483	4030006900	S.CER C1608 JB 1H 103K-T	T	23.3/32.1
C501	4030006900	S.CER C1608 JB 1H 103K-T	T	40.1/23.5
C502	4030009990	S.CER C1608 CH 1H 200J-T	T	36.1/20.3
C503	4030006900	S.CER C1608 JB 1H 103K-T	T	40.4/15.6
C504	4030011340	S.CER C1608 CH 1H 471J-T	T	41.6/21.9
C505	4030006900	S.CER C1608 JB 1H 103K-T	T	31.1/3.9
C506	4030009510	S.CER C1608 CH 1H 010B-T	B	34.9/15.9
C507	4030006900	S.CER C1608 JB 1H 103K-T	T	30.3/9.9
C508	4610001860	S.TRI TZB4Z060AB10R00 (TZBX4Z060BA110)	T	33.8/17.4
C509	4030009350	S.CER C1608 CH 1H 3R5B-T	T	30.1/15.8
C522	4030007100	S.CER C1608 CH 1H 560J-T	T	18.9/20.3
C523	4030006900	S.CER C1608 JB 1H 103K-T	T	23.6/15.6
C524	4030011340	S.CER C1608 CH 1H 471J-T	T	24.7/21.9
C525	4030006900	S.CER C1608 JB 1H 103K-T	T	14.2/3.9
C526	4030009510	S.CER C1608 CH 1H 010B-T	B	18.6/15.9
C527	4030006900	S.CER C1608 JB 1H 103K-T	T	13.4/9.9
C528	4610001830	S.TRI TZB4S100AB10R00 (TZBX4N100BA110)	T	17.2/17.4
C529	4030009920	S.CER C1608 CH 1H 050B-T	T	13.3/15.8
C552	4030007150	S.CER C1608 CH 1H 151J-T	T	52.9/20.3
C553	4030006900	S.CER C1608 JB 1H 103K-T	T	57.2/15.6
C554	4030011340	S.CER C1608 CH 1H 471J-T	T	58.4/21.8
C555	4030006900	S.CER C1608 JB 1H 103K-T	T	47.8/3.9
C556	4030009510	S.CER C1608 CH 1H 010B-T	B	51.7/15.9
C557	4030006900	S.CER C1608 JB 1H 103K-T	T	47/9.9
C558	4610001830	S.TRI TZB4S100AB10R00 (TZBX4N100BA110)	T	51/17.4
C559	4030011770	S.CER C1608 CH 1H 060B-T	T	46.9/15.8
C572	4030007130	S.CER C1608 CH 1H 101J-T	T	69.7/20.3
C573	4030006900	S.CER C1608 JB 1H 103K-T	T	74/15.6
C574	4030011340	S.CER C1608 CH 1H 471J-T	T	76.8/21.8
C575	4030006900	S.CER C1608 JB 1H 103K-T	T	64.6/3.9
C576	4030009510	S.CER C1608 CH 1H 010B-T	B	68.6/15.9
C577	4030006900	S.CER C1608 JB 1H 103K-T	T	63.8/9.9

[PLL UNIT]

REF NO.	PARTS NO.	DESCRIPTION	M.	H/V LOCATION
C578	4610001830	S.TRI TZB4S100AB10R00 (TZBX4N100BA110)	T	68/17.4
C579	4030007020	S.CER C1608 CH 1H 120J-T	T	63.8/15.9
C601	4030006900	S.CER C1608 JB 1H 103K-T	T	44.1/35.3
C602	4030007080	S.CER C1608 CH 1H 390J-T	T	41.2/40.2
C603	4030007010	S.CER C1608 CH 1H 100D-T	T	44.1/37.7
C609	4030006900	S.CER C1608 JB 1H 103K-T	T	44.1/34
C610	4030006900	S.CER C1608 JB 1H 103K-T	B	42.7/37.6
C620	4030007080	S.CER C1608 CH 1H 390J-T	T	41.2/42.8
C621	4030007120	S.CER C1608 CH 1H 820J-T	T	41.2/41.6
C622	4030006900	S.CER C1608 JB 1H 103K-T	T	40.4/47.3
C623	4030006900	S.CER C1608 JB 1H 103K-T	T	29.9/47.8
C624	4030006900	S.CER C1608 JB 1H 103K-T	T	36.5/45.4
C626	4030011600	S.CER C1608 JB 1E 104K-T	T	35.3/45.4
C628	4030006990	S.CER C1608 CH 1H 080D-T	T	44.1/42.8
C629	4030007060	S.CER C1608 CH 1H 270J-T	T	44.1/44.1
C630	4030006990	S.CER C1608 CH 1H 080D-T	T	44.1/45.3
C645	4030006900	S.CER C1608 JB 1H 103K-T	B	7.3/27.8
C661	4030006900	S.CER C1608 JB 1H 103K-T	T	5.8/24.9
C662	4030006900	S.CER C1608 JB 1H 103K-T	T	3.5/29
C663	4030006900	S.CER C1608 JB 1H 103K-T	T	3.7/27
C664	4030006900	S.CER C1608 JB 1H 103K-T	B	5.3/31.2
C681	4030006900	S.CER C1608 JB 1H 103K-T	T	34.9/42.1
C682	4030007130	S.CER C1608 CH 1H 101J-T	T	19.5/38.4
C686	4550005980	S.TAN TEESVA 1A 475M8R	T	30.4/32.2
C687	4030006900	S.CER C1608 JB 1H 103K-T	T	24.5/36.9
C689	4030011340	S.CER C1608 CH 1H 471J-T	T	25.6/43.2
C690	4030006900	S.CER C1608 JB 1H 103K-T	T	26.8/44.5
C691	4030011600	S.CER C1608 JB 1E 104K-T	B	27/37.2
C692	4030006860	S.CER C1608 JB 1H 102K-T	B	32.5/45.1
C693	4030006900	S.CER C1608 JB 1H 103K-T	T	30.7/34.5
C694	4030011340	S.CER C1608 CH 1H 471J-T	T	26.6/32.2
C695	4030006900	S.CER C1608 JB 1H 103K-T	T	34.8/39.4
C696	4030019500	S.CER GRM21BB31A106KE18 (GRM40 B)	T	30.2/43.7
C701	4030019500	S.CER GRM21BB31A106KE18 (GRM40 B)	B	134.7/19.9
C702	4030011600	S.CER C1608 JB 1E 104K-T	T	131/23
C703	4030011600	S.CER C1608 JB 1E 104K-T	T	123.9/20.5
C704	4030011600	S.CER C1608 JB 1E 104K-T	B	128.5/16.4
C705	4030011600	S.CER C1608 JB 1E 104K-T	T	122.8/12.1
C706	4030011600	S.CER C1608 JB 1E 104K-T	B	130.6/8.6
C707	4030011600	S.CER C1608 JB 1E 104K-T	T	138.4/12
C708	4030006900	S.CER C1608 JB 1H 103K-T	B	124.9/19.1
C709	4030011340	S.CER C1608 CH 1H 471J-T	T	139.1/2.1
C710	4030007120	S.CER C1608 CH 1H 820J-T	T	139.3/3.6
C711	4030017870	S.CER C1608 CH 1H 681J-T	T	141.4/3.3
C712	4030007060	S.CER C1608 CH 1H 270J-T	T	140.5/8.2
C713	4030017800	S.CER C1608 CH 1H 561J-T	T	142.7/3.2
C714	4030011280	S.CER C1608 CH 1H 271J-T	T	143.6/8.2
C715	4030006860	S.CER C1608 JB 1H 102K-T	T	144.6/6.6
C716	4030011280	S.CER C1608 CH 1H 271J-T	T	145/9.5
C717	4030011600	S.CER C1608 JB 1E 104K-T	T	124.5/21.7
C718	4030006900	S.CER C1608 JB 1H 103K-T	T	124.5/22.9
C719	4550007710	S.TAN TEESVB2 1A 476M8R	B	130.2/20.9
C720	4030006900	S.CER C1608 JB 1H 103K-T	T	137.3/2.8
C721	4030006900	S.CER C1608 JB 1H 103K-T	B	142.5/10.4
C722	4030011600	S.CER C1608 JB 1E 104K-T	T	142.9/12.8
C723	4030006900	S.CER C1608 JB 1H 103K-T	T	142.9/16
C724	4030011600	S.CER C1608 JB 1E 104K-T	T	141.7/21.6
C725	4030011600	S.CER C1608 JB 1E 104K-T	T	143.5/21.1
C726	4030017490	S.CER C1608 JB 1A 105K-T	T	142.9/14.7
C801	4030006900	S.CER C1608 JB 1H 103K-T	T	125.6/47.8
C802	4030006900	S.CER C1608 JB 1H 103K-T	T	131.6/47
C803	4030006900	S.CER C1608 JB 1H 103K-T	T	133.4/46.4
C804	4030006900	S.CER C1608 JB 1H 103K-T	B	126.6/42.5
C831	4030009910	S.CER C1608 CH 1H 040B-T	T	144.6/42.5
C832	4030009510	S.CER C1608 CH 1H 010B-T	T	154.8/42.1
C834	4030007030	S.CER C1608 CH 1H 150J-T	T	152.2/36.8
C835	4030006900	S.CER C1608 JB 1H 103K-T	T	154.8/36.8
C838	4030007020	S.CER C1608 CH 1H 120J-T	T	150.5/46.7
C851	4030006900	S.CER C1608 JB 1H 103K-T	T	143.1/50.7
C852	4030006900	S.CER C1608 JB 1H 103K-T	B	111.9/55.3
C853	4030006900	S.CER C1608 JB 1H 103K-T	T	140.5/49.8
C854	4030006900	S.CER C1608 JB 1H 103K-T	B	108.1/52.8
C855	4030019500	S.CER GRM21BB31A106KE18 (GRM40 B)	B	140.8/50.2
C856	4030019500	S.CER GRM21BB31A106KE18 (GRM40 B)	B	103.4/54.5
C1201	4030007080	S.CER C1608 CH 1H 390J-T	T	31.1/66.5
C1202	4030006980	S.CER C1608 CH 1H 070D-T	T	36.2/66.2
C1203	4030007020	S.CER C1608 CH 1H 120J-T	T	37.4/66.2
C1204	4030007080	S.CER C1608 CH 1H 390J-T	T	33/62.4
C1205	4030006900	S.CER C1608 JB 1H 103K-T	T	20.4/73.4
C1222	4030008560	S.CER C1608 CH 1H 300J-T	T	24.1/64.4
C1223	4030009530	S.CER C1608 CH 1H 030B-T	T	26/65.1
C1224	4030007070	S.CER C1608 CH 1H 330J-T	T	24.1/65.7
C1225	4030009520	S.CER C1608 CH 1H 020B-T	T	25.6/67
C1226	4030007050	S.CER C1608 CH 1H 220J-T	T	23.1/68.1
C1227	4030007100	S.CER C1608 CH 1H 560J-T	T	24.9/68.9
C1228	4030011280	S.CER C1608 CH 1H 271J-T	T	24.2/70.8
C1229	4030007100	S.CER C1608 CH 1H 560J-T	T	26.3/72.9
C1230	4030006900	S.CER C1608 JB 1H 103K-T	T	23/72.2
C1231	4030007010	S.CER C1608 CH 1H 100D-T	B	24.9/68.2
C1232	4030006900	S.CER C1608 JB 1H 103K-T	B	18.8/68.1
C1503	4030007010	S.CER C1608 CH 1H 100D-T	T	36.4/74.2
C1505	4030011810	S.CER C1608 JB 1A 224K-T	T	72.9/65.6
C1521	4030006900	S.CER C1608 JB 1H 103K-T	B	20.3/64.9
C1522	4030006900	S.CER C1608 JB 1H 103K-T	B	18.8/62.4
C2201	4030007080	S.CER C1608 CH 1H 390J-T	T	21.8/47.7
C2202	4030006980	S.CER C1608 CH 1H 070D-T	T	19.5/42.5
C2203	4030007020	S.CER C1608 CH 1H 120J-T	T	24.2/46.9
C2204	4030007080	S.CER C1608 CH 1H 390J-T	T	19.2/48.4
C2205	4030006900	S.CER C1608 JB 1H 103K-T	T	26.8/47.7

M.=Mounted side (T: Mounted on the Top side, B: Mounted on the Bottom side)
S.=Surface mount

[PLL UNIT]

REF NO.	PARTS NO.	DESCRIPTION		M.	H/V LOCATION
C2222	4030008560	S.CER	C1608 CH 1H 300J-T	T	9.6/46.6
C2223	4030009530	S.CER	C1608 CH 1H 030B-T	T	10.3/44.8
C2224	4030007070	S.CER	C1608 CH 1H 330J-T	T	9.6/42.9
C2225	4030009520	S.CER	C1608 CH 1H 020B-T	T	11.4/37.3
C2226	4030007050	S.CER	C1608 CH 1H 220J-T	T	7/38.7
C2227	4030007100	S.CER	C1608 CH 1H 560J-T	T	7.9/36.6
C2228	4030011280	S.CER	C1608 CH 1H 271J-T	T	7.1/34.4
C2229	4030007100	S.CER	C1608 CH 1H 560J-T	T	8.8/34.4
C2230	4030006900	S.CER	C1608 JB 1H 103K-T	B	4.9/34.1
C2231	4030007010	S.CER	C1608 CH 1H 100D-T	T	11.5/41.3
C2232	4030006900	S.CER	C1608 JB 1H 103K-T	B	5.7/42.5
C2511	4030006900	S.CER	C1608 JB 1H 103K-T	B	9.5/47.3
C2512	4030006900	S.CER	C1608 JB 1H 103K-T	T	5.7/47.1
J1	6510022581	S.CON	24FMN-BMTTR-A-TBT(LF)(SN)	T	147.7/71
J51	6510007020	CON	TMP-J01X-V6		
J81	6510007020	CON	TMP-J01X-V6		
J351	6510007020	CON	TMP-J01X-V6		
J651	6510007020	CON	TMP-J01X-V6		
J701	6510007020	CON	TMP-J01X-V6		
J831	6510007020	CON	TMP-J01X-V6		
J851	6510007020	CON	TMP-J01X-V6		
EP1	6910019900	S.BEA	MPZ1608S601AT	T	142.1/60.5
EP2	6910015970	S.BEA	MMZ1608B 301CT-AS	B	148.3/59.4
EP3	6910015970	S.BEA	MMZ1608B 301CT-AS	B	142.5/59
EP4	6910019900	S.BEA	MPZ1608S601AT	T	142.1/62.9
EP5	6910019900	S.BEA	MPZ1608S601AT	B	149.3/67.5
EP6	6910015970	S.BEA	MMZ1608B 301CT-AS	B	141.8/70.5
EP7	6910015970	S.BEA	MMZ1608B 301CT-AS	B	149.3/71.5
EP8	6910015970	S.BEA	MMZ1608B 301CT-AS	B	141.8/72.5
EP9	6910015970	S.BEA	MMZ1608B 301CT-AS	B	149.3/73.5
EP103	6910012350	S.BEA	MMZ1608Y 102BT	T	103/101.4
EP204	6910012350	S.BEA	MMZ1608Y 102BT	B	71.1/101.2
EP224	6910012350	S.BEA	MMZ1608Y 102BT	B	62.8/105.3
EP254	6910012350	S.BEA	MMZ1608Y 102BT	B	48.1/105.7
EP274	6910012350	S.BEA	MMZ1608Y 102BT	B	20.7/101.2
EP382	6910012350	S.BEA	MMZ1608Y 102BT	T	66/75.1
EP401	6910012350	S.BEA	MMZ1608Y 102BT	T	106.1/4.2
EP402	6910015970	S.BEA	MMZ1608B 301CT-AS	B	106.7/5.4
EP403	6910015970	S.BEA	MMZ1608B 301CT-AS	B	96.7/3.2
EP404	6910015970	S.BEA	MMZ1608B 301CT-AS	B	108.3/5.4
EP405	6910015970	S.BEA	MMZ1608B 301CT-AS	B	96/1.8
EP406	6910015970	S.BEA	MMZ1608B 301CT-AS	B	109.9/5.4
EP407	6910015970	S.BEA	MMZ1608B 301CT-AS	T	115.2/6.3
EP504	6910012350	S.BEA	MMZ1608Y 102BT	B	37/4.6
EP524	6910012350	S.BEA	MMZ1608Y 102BT	B	20.5/4.3
EP554	6910012350	S.BEA	MMZ1608Y 102BT	B	53.9/4.4
EP574	6910012350	S.BEA	MMZ1608Y 102BT	B	71/4.1
EP682	6910012350	S.BEA	MMZ1608Y 102BT	T	25.2/33.5
EP1503	6910015970	S.BEA	MMZ1608B 301CT-AS	T	39.6/65.4
EP2501	6910015970	S.BEA	MMZ1608B 301CT-AS	T	28.4/47.7

[RF UNIT]

REF NO.	PARTS NO.	DESCRIPTION		M.	H/V LOCATION
IC161	1190001930	S.IC	PS7122AL-1A-E3	T	134.8/91.3
IC201	1110007400	S.IC	BGA616	T	4.1/33.2
IC301	1130011530	S.IC	CD74HC4094M96	B	40.1/13.4
IC303	1130011530	S.IC	CD74HC4094M96	B	40.1/24.3
IC305	1130011530	S.IC	CD74HC4094M96	B	29/19
IC1401	1110006420	S.IC	UPC2708TB-E3-A	T	53.6/40
Q101	1590003680	S.TRA	KRC402 RTK/P	T	9.2/68
Q102	1590003680	S.TRA	KRC402 RTK/P	T	5.6/68.4
Q103	1530003900	S.TRA	KTC4075 BL-RTK/P	B	74.7/71.7
Q104	1590003770	S.TRA	KRA302E-RTK/P	B	72.4/73.2
Q151	1590003680	S.TRA	KRC402 RTK/P	T	46.8/83.2
Q152	1590003680	S.TRA	KRC402 RTK/P	T	44/81.2
Q153	1590003680	S.TRA	KRC402 RTK/P	T	49.5/83.3
Q161	1590003680	S.TRA	KRC402 RTK/P	B	115.2/81
Q162	1590003680	S.TRA	KRC402 RTK/P	T	143/85.6
Q201	1590003770	S.TRA	KRA302E-RTK/P	T	7.5/27.8
Q202	1590003680	S.TRA	KRC402 RTK/P	T	8/30.8
Q203	1590003680	S.TRA	KRC402 RTK/P	T	9.5/34.5
Q204	1590003680	S.TRA	KRC402 RTK/P	T	6.7/34.4
Q303	1590003680	S.TRA	KRC402 RTK/P	T	44.5/13.5
Q307	1590003680	S.TRA	KRC402 RTK/P	T	38/13.3
Q308	1590003770	S.TRA	KRA302E-RTK/P	T	38.2/7.9
Q309	1590003680	S.TRA	KRC402 RTK/P	T	38/16.2
Q310	1590003770	S.TRA	KRA302E-RTK/P	T	40.3/7.9
Q311	1590003680	S.TRA	KRC402 RTK/P	T	43.6/9.6
Q312	1590003770	S.TRA	KRA302E-RTK/P	T	44/7
Q313	1590003680	S.TRA	KRC402 RTK/P	T	34/11.5
Q314	1590003770	S.TRA	KRA302E-RTK/P	T	31.7/11.1
Q317	1590003680	S.TRA	KRC402 RTK/P	T	43.4/24.3
Q318	1590003770	S.TRA	KRA302E-RTK/P	T	28.3/6.5
Q319	1590003680	S.TRA	KRC402 RTK/P	T	39.3/23.1
Q320	1590003770	S.TRA	KRA302E-RTK/P	T	27.9/9.7
Q321	1590003680	S.TRA	KRC402 RTK/P	B	31.1/7.5
Q322	1590003770	S.TRA	KRA302E-RTK/P	B	28.6/5.7
Q323	1590003680	S.TRA	KRC402 RTK/P	B	32.4/11.1
Q324	1590003770	S.TRA	KRA302E-RTK/P	B	27.8/8.3
Q325	1590003680	S.TRA	KRC402 RTK/P	T	33/25.1
Q326	1590003770	S.TRA	KRA302E-RTK/P	T	25.4/8.3
Q327	1590003680	S.TRA	KRC402 RTK/P	B	28.5/12.5
Q328	1590003770	S.TRA	KRA302E-RTK/P	B	27/10.3
Q329	1590003680	S.TRA	KRC402 RTK/P	T	32.9/27.6
Q330	1590003770	S.TRA	KRA302E-RTK/P	T	30.1/28.2
Q331	1590003680	S.TRA	KRC402 RTK/P	B	29/29.3
Q332	1590003770	S.TRA	KRA302E-RTK/P	B	28.5/32.1
Q333	1590003680	S.TRA	KRC402 RTK/P	B	24.9/31.4
Q334	1590003770	S.TRA	KRA302E-RTK/P	B	22.2/30.9
Q335	1590003680	S.TRA	KRC402 RTK/P	B	24.9/28.8
Q336	1590003770	S.TRA	KRA302E-RTK/P	B	22.1/28.3
Q337	1590003680	S.TRA	KRC402 RTK/P	T	26.5/17.8
Q338	1590003770	S.TRA	KRA302E-RTK/P	T	26/20.9
Q339	1590003680	S.TRA	KRC402 RTK/P	B	24.9/26.2
Q340	1590003770	S.TRA	KRA302E-RTK/P	B	22.1/25.7
Q341	1590003680	S.TRA	KRC402 RTK/P	T	27.7/25
Q342	1590003770	S.TRA	KRA302E-RTK/P	T	25.2/24.4
Q343	1590003680	S.TRA	KRC402 RTK/P	T	26.3/27.7
Q344	1590003770	S.TRA	KRA302E-RTK/P	T	23.8/27.1
Q345	1590003680	S.TRA	KRC402 RTK/P	T	24.9/30.4
Q346	1590003770	S.TRA	KRA302E-RTK/P	T	22.4/29.8
Q1001	1560000641	S.FET	2SK1740-4/5-TB-E	T	72.6/26.6
Q1002	1560000641	S.FET	2SK1740-4/5-TB-E	T	72.6/23.5
Q1003	1560000641	S.FET	2SK1740-4/5-TB-E	B	92.6/27.5
Q1004	1560000641	S.FET	2SK1740-4/5-TB-E	T	90.1/31.9
Q1005	1560000641	S.FET	2SK1740-4/5-TB-E	T	90.1/24.1
Q1006	1560000641	S.FET	2SK1740-4/5-TB-E	B	92.6/23.4
Q1007	1530003900	S.TRA	KTC4075 BL-RTK/P	T	106.8/33.2
Q1008	1530003340	S.TRA	2SC3357-T1 RF	T	107.6/20.6
Q1101	1530003340	S.TRA	2SC3357-T1 RF	T	81.1/19.7
Q1201	1560000641	S.FET	2SK1740-4/5-TB-E	T	72.3/48.5
Q1202	1560000641	S.FET	2SK1740-4/5-TB-E	T	72.3/45.5
Q1203	1560000641	S.FET	2SK1740-4/5-TB-E	B	92.6/49.9
Q1204	1560000641	S.FET	2SK1740-4/5-TB-E	T	89.2/51.1
Q1205	1560000641	S.FET	2SK1740-4/5-TB-E	T	89.2/45.5
Q1206	1560000641	S.FET	2SK1740-4/5-TB-E	B	92.6/46.5
Q1207	1530003900	S.TRA	KTC4075 BL-RTK/P	T	103.3/58.6
Q1208	1530003340	S.TRA	2SC3357-T1 RF	T	108.5/51.8
Q1209	1530003851	S.TRA	2SC5551F-TD-E	B	98.9/56.2
Q1301	1530003340	S.TRA	2SC3357-T1 RF	T	75.5/62.4
Q1551	1560000561	S.FET	2SK882-GR(TE85L,F)	B	121/70.1
Q1901	1590003680	S.TRA	KRC402 RTK/P	T	130.9/27.2
Q1902	1590003770	S.TRA	KRA302E-RTK/P	T	130.9/29.5
Q2001	1560000641	S.FET	2SK1740-4/5-TB-E	T	106.6/76
D101	1790000980	S.DIO	MA742(TX)	B	83.2/72.4
D104	1750000581	S.DIO	1SV307(TPH3,F)	B	14.1/79.4
D105	1750001320	S.DIO	KDS4148U RTK/P	B	77.4/74.7
D106	1750001320	S.DIO	KDS4148U RTK/P	T	59.4/77.7
D107	1750001320	S.DIO	KDS4148U RTK/P	T	67/75.1
D108	1750001320	S.DIO	KDS4148U RTK/P	B	86.2/75
D109	1750001320	S.DIO	KDS4148U RTK/P	B	94.7/75.7
D151	1750000581	S.DIO	1SV307(TPH3,F)	T	46/86
D152	1750000581	S.DIO	1SV307(TPH3,F)	B	16.4/82.1
D161	1750001320	S.DIO	KDS4148U RTK/P	B	111/83.4
D201	1750000581	S.DIO	1SV307(TPH3,F)	B	2.9/77.8
D501	1750000581	S.DIO	1SV307(TPH3,F)	T	20.5/71.8
D502	1750000581	S.DIO	1SV307(TPH3,F)	T	28.8/41.8
D551	1750000581	S.DIO	1SV307(TPH3,F)	T	31/74.8
D552	1750000581	S.DIO	1SV307(TPH3,F)	T	33/44.6
D601	1750000581	S.DIO	1SV307(TPH3,F)	T	21.4/75.2
D602	1750000581	S.DIO	1SV307(TPH3,F)	T	25.7/74.5
D603	1750000581	S.DIO	1SV307(TPH3,F)	T	28.8/43.6
D604	1750000581	S.DIO	1SV307(TPH3,F)	B	42/44.9

M.=Mounted side (T: Mounted on the Top side, B: Mounted on the Bottom side)
S.=Surface mount

[RF UNIT]

REF NO.	PARTS NO.	DESCRIPTION	M.	H/V LOCATION
D651	1750000581	S.DIO 1SV307(TPH3,F)	T	43.8/74.2
D652	1750000581	S.DIO 1SV307(TPH3,F)	T	42.5/45.6
D701	1750000581	S.DIO 1SV307(TPH3,F)	B	41.6/75.9
D702	1750000581	S.DIO 1SV307(TPH3,F)	B	45.1/45.3
D751	1750000581	S.DIO 1SV307(TPH3,F)	B	37.2/76
D752	1750000581	S.DIO 1SV307(TPH3,F)	B	35.7/45.3
D801	1750000581	S.DIO 1SV307(TPH3,F)	T	10.9/65.6
D802	1750000581	S.DIO 1SV307(TPH3,F)	T	34.8/42.5
D851	1750000581	S.DIO 1SV307(TPH3,F)	B	20.5/72.6
D852	1750000581	S.DIO 1SV307(TPH3,F)	B	32/44.8
D951	1750000581	S.DIO 1SV307(TPH3,F)	T	51.8/29.1
D1001	1750000971	S.DIO CPH5513-TL-E	T	103.5/27.5
D1002	1750000441	S.DIO 1SV263-TL-E	T	109.8/31.8
D1003	1750000971	S.DIO CPH5513-TL-E	T	107.1/27.5
D1004	1750001320	S.DIO KDS4148U RTK/P	B	109/32.4
D1201	1750000971	S.DIO CPH5513-TL-E	T	103.5/46.2
D1202	1750001310	S.DIO KDS114 RTK/PA	T	100.2/60.7
D1203	1750000441	S.DIO 1SV263-TL-E	T	103.8/50.5
D1204	1750000971	S.DIO CPH5513-TL-E	T	107/46.2
D1205	1750001320	S.DIO KDS4148U RTK/P	T	102.5/62.1
D1301	1750000581	S.DIO 1SV307(TPH3,F)	T	93.4/64.1
D1302	1750000581	S.DIO 1SV307(TPH3,F)	B	88.6/65.6
D1401	1750000581	S.DIO 1SV307(TPH3,F)	B	46.9/35.1
D1451	1750000431	S.DIO HSB88WSTR-E	T	80.2/71
D1501	1750001310	S.DIO KDS114 RTK/PA	T	102.7/68.6
D1551	1750000581	S.DIO 1SV307(TPH3,F)	T	124.2/30.5
D1601	1750000581	S.DIO 1SV307(TPH3,F)	T	122.1/30.5
D1701	1750000581	S.DIO 1SV307(TPH3,F)	B	149.5/43.3
D1702	1750000581	S.DIO 1SV307(TPH3,F)	B	150.4/79.8
D1703	1750000581	S.DIO 1SV307(TPH3,F)	B	125.2/37.5
D1704	1750000581	S.DIO 1SV307(TPH3,F)	B	131.8/78.9
D1705	1750000581	S.DIO 1SV307(TPH3,F)	B	137.9/37.5
D1706	1750000581	S.DIO 1SV307(TPH3,F)	B	139.9/78.3
L101	6200007780	S.COI LQW2BHNR12J03L	T	46.2/89.3
L102	6200007760	S.COI LQW2BHN82NJ03L	T	40.1/88.4
L103	6200010730	S.COI C2520C-68NG-A	T	14.7/83.4
L104	6200005491	S.COI NLV32T-331J	B	9.3/67.5
L137	6190001650	COI ELC06D102E		
L151	6200005491	S.COI NLV32T-331J	T	44.8/78
L161	6200002041	S.COI NLV25T-101J	B	99.2/88.4
L201	6200009810	S.COI LQH31HNR61J03L	T	3.8/20
L202	6200002181	S.COI NLV25T-R12J	T	3.3/23
L203	6200005041	S.COI NLV25T-220J	T	3.9/27.6
L251	6200005491	S.COI NLV32T-331J	B	12.2/76.1
L252	6200005491	S.COI NLV32T-331J	B	10.4/72.5
L253	6180003560	COI SP0406-5R6K-6		
L271	6180003550	COI SP0406-4R7K-6		
L501	6200010780	S.COI C2520C-1R0G-A	T	15.1/65.7
L502	6200010970	S.COI C2520C-1R8G-A(1.8U)	T	15.1/60.1
L503	6200010970	S.COI C2520C-1R8G-A(1.8U)	T	15.1/54.4
L504	6200010780	S.COI C2520C-1R0G-A	T	15.2/43.4
L505	6200010970	S.COI C2520C-1R8G-A(1.8U)	T	15.1/49.2
L551	6200010770	S.COI C2520C-R68G-A	T	34.8/70.4
L552	6200010950	S.COI C2520C-1R5G-A (1.5U)	T	34.8/64.7
L553	6200010950	S.COI C2520C-1R5G-A (1.5U)	T	34.8/59.1
L554	6200010770	S.COI C2520C-R68G-A	T	34.9/47.7
L555	6200010950	S.COI C2520C-1R5G-A (1.5U)	T	34.9/53.3
L601	6200010530	S.COI C2520C-R56G-A (0.56U)	T	25.1/70.3
L602	6200010450	S.COI C2520C-R82G-A (0.82U)	T	25.1/64.6
L603	6200010450	S.COI C2520C-R82G-A (0.82U)	T	25.1/59
L604	6200010530	S.COI C2520C-R56G-A (0.56U)	T	25.1/48
L605	6200010450	S.COI C2520C-R82G-A (0.82U)	T	25/53.3
L651	6200010870	S.COI C2520C-R33G-A (0.33U)	T	44.3/69.8
L652	6200010770	S.COI C2520C-R68G-A	T	44.3/64.1
L653	6200010770	S.COI C2520C-R68G-A	T	44.2/58.7
L654	6200010870	S.COI C2520C-R33G-A (0.33U)	T	44.4/47.5
L655	6200010770	S.COI C2520C-R68G-A	T	44.3/53.4
L701	6200010980	S.COI LQW2BHNR27J03L	B	45.1/67.2
L702	6200008080	S.COI LQW2BHNR22J03L	B	45.6/58.9
L703	6200010980	S.COI LQW2BHNR27J03L	B	44.6/55.7
L751	6200008100	S.COI LQH31HNR14J03L	B	33.8/70
L753	6200007810	S.COI LQH31HN95NK03L	B	38.6/59.5
L754	6200008100	S.COI LQH31HNR14J03L	B	34.2/49.2
L801	6200010800	S.COI C2520C-4R7G-A	T	33.8/34.4
L802	6200010800	S.COI C2520C-4R7G-A	T	34.3/38.2
L803	6200009060	S.COI LQH32CN101K23L	T	22.7/38
L851	6200007810	S.COI LQH31HN95NK03L	B	25/69.5
L852	6200009810	S.COI LQH31HNR61J03L	B	25/64.4
L853	6200009810	S.COI LQH31HNR61J03L	B	28.5/60
L854	6200009810	S.COI LQH31HNR61J03L	B	25/54.5
L855	6200007810	S.COI LQH31HN95NK03L	B	25/49.5
L901	6200005491	S.COI NLV32T-331J	B	42.7/32.1
L904	6140004680	S.COI LR-528 4KBL	T	54.5/24.4
L905	6140004680	S.COI LR-528 4KBL	T	56.7/13.2
L971	6200005491	S.COI NLV32T-331J	B	25.9/41.7
L972	6200005491	S.COI NLV32T-331J	B	25.9/37.5
L1001	6200012470	S.COI 0.30-1.7-7TL 45.3N <COMO>	T	61.6/20.2
L1002	6200013080	S.COI 0.25-1.9-10TL 97.0N <COMO>	T	62.8/24.3
L1003	6200013000	S.COI 0.25-1.9-13TL 135N <COMO>	T	62.8/29.1
L1004	6200008940	S.COI LQH32MN331K23L	T	65.7/33.6
L1005	6200010870	S.COI C2520C-R33G-A (0.33U)	T	72.4/31.7
L1006	6200009060	S.COI LQH32CN101K23L	B	85.6/18.3
L1007	6140004420	COI LR-501		
L1008	6200007780	S.COI LQW2BHNR12J03L	B	94.9/33.8
L1009	6200007780	S.COI LQW2BHNR12J03L	B	95.4/19.6
L1010	6200009060	S.COI LQH32CN101K23L	T	99.9/21.2
L1011	6150005320	COI LS-546 7K7		
L1012	6200005011	S.COI NLV25T-100J	B	105.3/24.5
L1013	6200005011	S.COI NLV25T-100J	T	112.6/31.2
L1014	6200005011	S.COI NLV25T-100J	B	108.9/29.7
L1015	6200005011	S.COI NLV25T-100J	T	113.7/27.1
L1016	6200005011	S.COI NLV25T-100J	T	112/12.5

[RF UNIT]

REF NO.	PARTS NO.	DESCRIPTION	M.	H/V LOCATION
L1017	6200010740	S.COI C2520C-R27G-A	T	108.9/15.7
L1018	6140002810	S.COI LR-317	T	122.7/35.1
L1019	6190001650	COI ELC06D102E		
L1020	6200003711	S.COI NLV25T-2R7J	B	111.3/14.6
L1101	6130002961	S.COI #617DB-1327=P3	T	90.7/20.1
L1102	6200008090	S.COI LQW2BHN68NJ03L	T	93.3/15.1
L1103	6200008090	S.COI LQW2BHN68NJ03L	T	89.4/13.6
L1104	6200007750	S.COI LQW2BHN56NJ03L	T	85.8/13.1
L1105	6200005011	S.COI NLV25T-100J	T	79.5/12.1
L1106	6200003281	S.COI NLV25T-2R2J	T	75.4/15.5
L1201	6200012470	S.COI 0.30-1.7-7TL 45.3N <COMO>	T	61.8/37.8
L1202	6200013080	S.COI 0.25-1.9-10TL 97.0N <COMO>	T	62.6/42.2
L1203	6200013000	S.COI 0.25-1.9-13TL 135N <COMO>	T	62/47
L1204	6200008940	S.COI LQH32MN331K23L	T	65.3/50.7
L1205	6200010870	S.COI C2520C-R33G-A (0.33U)	T	72.4/52.2
L1206	6200009060	S.COI LQH32CN101K23L	B	79.6/50.8
L1207	6140004420	COI LR-501		
L1208	6200007780	S.COI LQW2BHNR12J03L	B	92.4/42.5
L1209	6200007780	S.COI LQW2BHNR12J03L	B	89.3/53.5
L1210	6200009060	S.COI LQH32CN101K23L	T	98.6/54.4
L1211	6150005320	COI LS-546 7K7		
L1212	6200005011	S.COI NLV25T-100J	B	105.3/45.1
L1214	6200005011	S.COI NLV25T-100J	B	112.1/52.3
L1215	6200005011	S.COI NLV25T-100J	B	104.6/49
L1216	6200005011	S.COI NLV25T-100J	B	110.8/46.4
L1217	6200005011	S.COI NLV25T-100J	T	113.7/56.7
L1218	6200010740	S.COI C2520C-R27G-A	T	114.3/48.7
L1219	6200003711	S.COI NLV25T-2R7J	B	111/64.4
L1220	6200010980	S.COI LQW2BHNR27J03L	B	94.7/59.4
L1221	6200005011	S.COI NLV25T-100J	B	91.9/60.5
L1242	6200005011	S.COI NLV25T-100J	B	106.7/58.5
L1301	6130002961	S.COI #617DB-1327=P3	T	91.8/54.9
L1302	6200003281	S.COI NLV25T-2R2J	B	99.4/63
L1303	6200008090	S.COI LQW2BHN68NJ03L	T	89.5/62.4
L1304	6200008090	S.COI LQW2BHN68NJ03L	T	86.9/58.8
L1305	6200007750	S.COI LQW2BHN56NJ03L	T	85.9/63.2
L1306	6200005011	S.COI NLV25T-100J	T	80.2/55.7
L1307	6200003281	S.COI NLV25T-2R2J	T	79.2/58.9
L1401	6200005041	S.COI NLV25T-220J	T	50.2/40.2
L1402	6200002641	S.COI NLV25T-R15J	T	52/46.4
L1403	6200002431	S.COI NLV25T-082J	T	51.4/51.2
L1451	6130002961	S.COI #617DB-1327=P3	T	73.9/71
L1452	6130002961	S.COI #617DB-1327=P3	T	86.6/71
L1551	6200004600	S.COI MLF1608D R15K-T	B	98.7/69.4
L1552	6200004600	S.COI MLF1608D R15K-T	B	103.3/72
L1553	6150004280	COI LS-484B (C-14927)		
L1554	6200002611	S.COI NLV25T-R47J	B	124.2/71
L1555	6200003281	S.COI NLV25T-2R2J	B	127.6/60
L1601	6200010760	S.COI C2520C-27NG-A	T	132.6/32.7
L1602	6200003281	S.COI NLV25T-2R2J	T	119.8/30.5
L1703	6200003281	S.COI NLV25T-2R2J	B	143.4/46.4
L1704	6200003281	S.COI NLV25T-2R2J	B	144.2/74.4
R101	7540000130	ABS 2P-50A-301		
R102	7030003560	S.RES ERJ3GEYJ 103 V (10K)	T	52.4/91.5
R103	7030003480	S.RES ERJ3GEYJ 222 V (2.2K)	B	77.7/70.9
R104	7030003680	S.RES ERJ3GEYJ 104 V (100K)	B	74.6/69.3
R105	7030003860	S.RES ERJ3GE JPW V	B	80.5/70.9
R106	7030003340	S.RES ERJ3GEYJ 151 V (150)	B	69.5/89.5
R107	7030008180	S.RES ERJ12YJ331U (330)	B	12.8/67.5
R108	7030003680	S.RES ERJ3GEYJ 104 V (100K)	T	6.3/70.4
R109	7030003560	S.RES ERJ3GEYJ 103 V (10K)	T	5.8/66.4
R110	7030003270	S.RES ERJ3GEYJ 390 V (39)	B	70.2/87.2
R111	7030003340	S.RES ERJ3GEYJ 151 V (150)	B	71.1/89.5
R112	7030003310	S.RES ERJ3GEYJ 820 V (82)	B	65.4/89.5
R113	7030003320	S.RES ERJ3GEYJ 101 V (100)	B	66.2/87.2
R114	7030003310	S.RES ERJ3GEYJ 820 V (82)	B	67/89.5
R115	7030003340	S.RES ERJ3GEYJ 151 V (150)	B	74.2/75
R116	7030003340	S.RES ERJ3GEYJ 151 V (150)	T	22.1/27
R117	7030003340	S.RES ERJ3GEYJ 151 V (150)	T	21.4/10.2
R118	7030003340	S.RES ERJ3GEYJ 151 V (150)	T	87/75.4
R119	7030003340	S.RES ERJ3GEYJ 151 V (150)	T	92.9/75.3
R151	7030003560	S.RES ERJ3GEYJ 103 V (10K)	T	52.1/83.7
R152	7540000130	ABS 2P-50A-301		
R153	7030003560	S.RES ERJ3GEYJ 103 V (10K)	B	6.5/84.2
R154	7030003680	S.RES ERJ3GEYJ 104 V (100K)	T	47.4/81.2
R155	7030003480	S.RES ERJ3GEYJ 222 V (2.2K)	T	47.6/86.1
R156	7030008180	S.RES ERJ12YJ331U (330)	T	40.9/81.9
R157	7030003680	S.RES ERJ3GEYJ 104 V (100K)	T	47.4/79.4
R161	7540000270	S.ABS ERZVF2M201	T	134.3/83
R162	7030003200	S.RES ERJ3GEYJ 100 V (10)	B	102/80.5
R163	7030003390	S.RES ERJ3GEYJ 391 V (390)	T	140.5/85.4
R201	7030003400	S.RES ERJ3GEYJ 471 V (470)	T	5.8/17
R202	7030003200	S.RES ERJ3GEYJ 100 V (10)	T	3.9/17.5
R203	7030003400	S.RES ERJ3GEYJ 471 V (470)	T	5.8/18.2
R207	7030003220	S.RES ERJ3GEYJ 150 V (15)	T	7.4/25.8
R208	7030003560	S.RES ERJ3GEYJ 103 V (10K)	T	8.9/37.3
R209	7030003380	S.RES ERJ3GEYJ 331 V (330)	T	3.8/40.7
R210	7030003220	S.RES ERJ3GEYJ 150 V (15)	T	6/42.2
R211	7030003380	S.RES ERJ3GEYJ 331 V (330)	T	3.8/42.5
R212	7030003350	S.RES ERJ3GEYJ 181 V (180)	T	4.1/44.5
R213	7030003680	S.RES ERJ3GEYJ 104 V (100K)	T	7.6/37.6
R251	7030003680	S.RES ERJ3GEYJ 104 V (100K)	B	8/76.9
R301	7030003560	S.RES ERJ3GEYJ 103 V (10K)	T	28.6/4.6
R302	7030003560	S.RES ERJ3GEYJ 103 V (10K)	T	25.2/6.4
R303	7030003560	S.RES ERJ3GEYJ 103 V (10K)	B	26.6/5.8
R304	7030003560	S.RES ERJ3GEYJ 103 V (10K)	B	24.7/7.9
R305	7030003560	S.RES ERJ3GEYJ 103 V (10K)	T	22.9/7.7
R306	7030003560	S.RES ERJ3GEYJ 103 V (10K)	B	25/12.7
R307	7030003560	S.RES ERJ3GEYJ 103 V (10K)	T	28.4/30.5
R308	7030003560	S.RES ERJ3GEYJ 103 V (10K)	T	27.9/32.4
R309	7030003560	S.RES ERJ3GEYJ 103 V (10K)	B	21.2/33
R310	7030003560	S.RES ERJ3GEYJ 103 V (10K)	T	19.8/29.2

M.=Mounted side (T: Mounted on the Top side, B: Mounted on the Bottom side)
S.=Surface mount

[RF UNIT]

REF NO.	PARTS NO.	DESCRIPTION	M.	H/V LOCATION
R311	7030003560	S.RES ERJ3GEYJ 103 V (10K)	T	26/13.8
R312	7030003560	S.RES ERJ3GEYJ 103 V (10K)	T	19.8/27.2
R313	7030003560	S.RES ERJ3GEYJ 103 V (10K)	T	26/15.3
R314	7030003560	S.RES ERJ3GEYJ 103 V (10K)	T	37.1/10.4
R315	7030003560	S.RES ERJ3GEYJ 103 V (10K)	T	46.2/8.6
R316	7030003560	S.RES ERJ3GEYJ 103 V (10K)	T	42.4/7.1
R360	7030003860	S.RES ERJ3GE JPW V	B	24.6/4.7
R361	7030003860	S.RES ERJ3GE JPW V	B	19.5/29.3
R362	7030003860	S.RES ERJ3GE JPW V	B	46/11.7
R451	7030004050	S.RES ERJ3GEYJ 1R0 V (1)	T	147.5/13.4
R452	7030004050	S.RES ERJ3GEYJ 1R0 V (1)	T	146.3/13.4
R501	7030003320	S.RES ERJ3GEYJ 101 V (100)	T	18.4/64.8
R502	7030003320	S.RES ERJ3GEYJ 101 V (100)	T	17.7/41.5
R551	7030003320	S.RES ERJ3GEYJ 101 V (100)	T	37.6/71.6
R552	7030003320	S.RES ERJ3GEYJ 101 V (100)	T	37.7/46.2
R601	7030003320	S.RES ERJ3GEYJ 101 V (100)	T	27.9/71.3
R602	7030003320	S.RES ERJ3GEYJ 101 V (100)	T	28/46.4
R651	7030003320	S.RES ERJ3GEYJ 101 V (100)	T	46.8/67.5
R652	7030003320	S.RES ERJ3GEYJ 101 V (100)	T	46.9/45.7
R701	7030003320	S.RES ERJ3GEYJ 101 V (100)	B	42.2/66.4
R702	7030003320	S.RES ERJ3GEYJ 101 V (100)	B	41.4/50
R751	7030003320	S.RES ERJ3GEYJ 101 V (100)	B	31.8/70.1
R752	7030003860	S.RES ERJ3GE JPW V	B	35.6/67.7
R753	7030003860	S.RES ERJ3GE JPW V	B	32.9/56.7
R754	7030003320	S.RES ERJ3GEYJ 101 V (100)	B	38/49
R801	7030003320	S.RES ERJ3GEYJ 101 V (100)	T	26.3/37.4
R802	7030003860	S.RES ERJ3GE JPW V	T	26.3/36
R803	7030003320	S.RES ERJ3GEYJ 101 V (100)	T	28.9/37.4
R851	7030003320	S.RES ERJ3GEYJ 101 V (100)	B	29.4/65.8
R852	7030003320	S.RES ERJ3GEYJ 101 V (100)	B	28.5/52
R901	7030009220	S.RES ERJ12YJ561U	B	46.5/30.2
R902	7030003320	S.RES ERJ3GEYJ 101 V (100)	T	54.5/17.8
R951	7030003640	S.RES ERJ3GEYJ 473 V (47K)	T	52.1/30.7
R952	7030003650	S.RES ERJ3GEYJ 563 V (56K)	T	48.4/27.8
R953	7030003570	S.RES ERJ3GEYJ 123 V (12K)	T	48.4/30.4
R954	7030003480	S.RES ERJ3GEYJ 222 V (2.2K)	T	49.6/27.8
R971	7030008180	S.RES ERJ12YJ331U (330)	B	32/41.7
R972	7030009220	S.RES ERJ12YJ561U	B	32/37.5
R1001	7030003270	S.RES ERJ3GEYJ 390 V (39)	T	66.7/30.8
R1002	7030003400	S.RES ERJ3GEYJ 471 V (470)	B	85.9/29.6
R1003	7030003400	S.RES ERJ3GEYJ 471 V (470)	T	87.2/29.7
R1004	7030003400	S.RES ERJ3GEYJ 471 V (470)	T	87.2/24.5
R1005	7030003400	S.RES ERJ3GEYJ 471 V (470)	B	85.9/22.6
R1006	7310004650	S.TRI EVM-2WSX80 B53 (502)	T	87.2/27.7
R1007	7310004650	S.TRI EVM-2WSX80 B53 (502)	T	92.1/27.7
R1008	7030003320	S.RES ERJ3GEYJ 101 V (100)	B	94.4/36.4
R1009	7030003320	S.RES ERJ3GEYJ 101 V (100)	B	95.5/21.8
R1010	7030003360	S.RES ERJ3GEYJ 221 V (220)	B	97.8/27.7
R1011	7030003480	S.RES ERJ3GEYJ 222 V (2.2K)	T	105.8/31.1
R1012	7030003460	S.RES ERJ3GEYJ 152 V (1.5K)	T	103.2/31.2
R1013	7030003440	S.RES ERJ3GEYJ 102 V (1K)	T	102.1/33
R1014	7030003220	S.RES ERJ3GEYJ 150 V (15)	T	109.3/24.2
R1015	7030003560	S.RES ERJ3GEYJ 103 V (10K)	T	104.8/32.9
R1016	7030003250	S.RES ERJ3GEYJ 270 V (27)	T	111.5/24.9
R1017	7030003420	S.RES ERJ3GEYJ 681 V (680)	T	112.6/18.3
R1018	7030003480	S.RES ERJ3GEYJ 222 V (2.2K)	T	112.6/17.1
R1019	7030003400	S.RES ERJ3GEYJ 471 V (470)	T	111.7/15.9
R1020	7030003320	S.RES ERJ3GEYJ 101 V (100)	T	118/38
R1021	7030003200	S.RES ERJ3GEYJ 100 V (10)	T	110.8/22.8
R1101	7030007860	S.RES ERJ3GEYJ 8R2V (8.2)	T	95.9/19.5
R1102	7030003340	S.RES ERJ3GEYJ 151 V (150)	T	94.7/18.3
R1103	7030007860	S.RES ERJ3GEYJ 8R2V (8.2)	T	94.7/21
R1104	7030004040	S.RES ERJ3GEYJ 4R7 V (4.7)	T	79.9/16.5
R1106	7030003420	S.RES ERJ3GEYJ 681 V (680)	T	76.1/18.5
R1107	7030003450	S.RES ERJ3GEYJ 122 V (1.2K)	T	76.2/20.9
R1108	7030003380	S.RES ERJ3GEYJ 331 V (330)	T	83.9/21.6
R1201	7030003270	S.RES ERJ3GEYJ 390 V (39)	T	66.6/46.7
R1202	7030003400	S.RES ERJ3GEYJ 471 V (470)	B	85.8/52.6
R1203	7030003400	S.RES ERJ3GEYJ 471 V (470)	T	86.3/50.5
R1204	7030003400	S.RES ERJ3GEYJ 471 V (470)	T	86.3/44.5
R1205	7030003400	S.RES ERJ3GEYJ 471 V (470)	B	86.2/43.8
R1206	7310004650	S.TRI EVM-2WSX80 B53 (502)	T	87/48.2
R1207	7310004650	S.TRI EVM-2WSX80 B53 (502)	T	92/48.2
R1208	7030003320	S.RES ERJ3GEYJ 101 V (100)	B	92.4/40.2
R1209	7030003320	S.RES ERJ3GEYJ 101 V (100)	B	91.8/53.2
R1210	7030003360	S.RES ERJ3GEYJ 221 V (220)	B	101.3/47.8
R1212	7030003480	S.RES ERJ3GEYJ 222 V (2.2K)	B	103.9/57.2
R1213	7030003480	S.RES ERJ3GEYJ 222 V (2.2K)	T	103.3/52.8
R1214	7030003460	S.RES ERJ3GEYJ 152 V (1.5K)	T	105.2/53.4
R1215	7030003440	S.RES ERJ3GEYJ 102 V (1K)	T	103.3/54
R1216	7030003220	S.RES ERJ3GEYJ 150 V (15)	T	110.1/47.4
R1217	7030003560	S.RES ERJ3GEYJ 103 V (10K)	T	103.6/56.7
R1218	7030003250	S.RES ERJ3GEYJ 270 V (27)	T	110.8/45.5
R1219	7030003420	S.RES ERJ3GEYJ 681 V (680)	T	107.8/56.2
R1220	7030003480	S.RES ERJ3GEYJ 222 V (2.2K)	T	105.9/55.2
R1221	7030003400	S.RES ERJ3GEYJ 471 V (470)	T	112.1/49.6
R1222	7030003280	S.RES ERJ3GEYJ 470 V (47)	B	100.5/52.3
R1223	7030003530	S.RES ERJ3GEYJ 562 V (5.6K)	B	95/56.1
R1224	7030003440	S.RES ERJ3GEYJ 102 V (1K)	B	91.2/56.5
R1225	7030003200	S.RES ERJ3GEYJ 100 V (10)	T	112.1/46.7
R1226	7030003520	S.RES ERJ3GEYJ 472 V (4.7K)	T	99.1/57
R1229	7030003400	S.RES ERJ3GEYJ 471 V (470)	B	108.9/56.1
R1301	7030007860	S.RES ERJ3GEYJ 8R2V (8.2)	T	94.3/62
R1302	7030003340	S.RES ERJ3GEYJ 151 V (150)	T	95.6/62
R1303	7030007860	S.RES ERJ3GEYJ 8R2V (8.2)	T	95.6/59.3
R1304	7030003440	S.RES ERJ3GEYJ 102 V (1K)	T	94/58.8
R1305	7030004040	S.RES ERJ3GEYJ 4R7 V (4.7)	T	73.9/59.2
R1307	7030003420	S.RES ERJ3GEYJ 681 V (680)	T	79.9/61.6
R1308	7030003450	S.RES ERJ3GEYJ 122 V (1.2K)	T	79.9/63.1
R1309	7030003380	S.RES ERJ3GEYJ 331 V (330)	T	72.3/63.1
R1401	7030003340	S.RES ERJ3GEYJ 151 V (150)	T	50.7/35.2
R1402	7030003270	S.RES ERJ3GEYJ 390 V (39)	T	50.7/36.4
R1403	7030003340	S.RES ERJ3GEYJ 151 V (150)	T	52.6/36.3
R1404	7030003320	S.RES ERJ3GEYJ 101 V (100)	T	54.5/36.9

[RF UNIT]

REF NO.	PARTS NO.	DESCRIPTION	M.	H/V LOCATION
R1405	7030003320	S.RES ERJ3GEYJ 101 V (100)	T	54.8/50.5
R1406	7030003200	S.RES ERJ3GEYJ 100 V (10)	T	51.4/43.1
R1451	7030003430	S.RES ERJ3GEYJ 821 V (820)	B	91.1/73.8
R1452	7030003430	S.RES ERJ3GEYJ 821 V (820)	B	88.4/73.8
R1453	7030004030	S.RES ERJ3GEYJ 5R6 V (5.6)	B	86.8/69.4
R1454	7030003430	S.RES ERJ3GEYJ 821 V (820)	B	88.6/69.4
R1502	7030003480	S.RES ERJ3GEYJ 222 V (2.2K)	T	100.4/69.4
R1503	7030003290	S.RES ERJ3GEYJ 560 V (56)	T	97.6/70.5
R1504	7030003480	S.RES ERJ3GEYJ 222 V (2.2K)	T	95.8/68.6
R1552	7030003320	S.RES ERJ3GEYJ 101 V (100)	B	118.8/69.9
R1553	7510001491	S.THE NTCG16 3NH 681JT	B	121.1/66.7
R1554	7030003480	S.RES ERJ3GEYJ 222 V (2.2K)	B	122.4/66.7
R1555	7030003440	S.RES ERJ3GEYJ 102 V (1K)	B	125/69
R1556	7030003340	S.RES ERJ3GEYJ 151 V (150)	B	127.5/68.2
R1557	7030004040	S.RES ERJ3GEYJ 4R7 V (4.7)	B	127.7/71
R1558	7030003440	S.RES ERJ3GEYJ 102 V (1K)	B	129.1/63.5
R1601	7030003480	S.RES ERJ3GEYJ 222 V (2.2K)	T	120.8/27.8
R1602	7030003280	S.RES ERJ3GEYJ 470 V (47)	T	128.1/35.2
R1603	7030003280	S.RES ERJ3GEYJ 470 V (47)	T	129/32.7
R1604	7030003480	S.RES ERJ3GEYJ 222 V (2.2K)	T	120.8/26.6
R1701	7030003400	S.RES ERJ3GEYJ 471 V (470)	B	145.5/42.7
R1702	7030003440	S.RES ERJ3GEYJ 102 V (1K)	B	156/43.2
R1703	7030003440	S.RES ERJ3GEYJ 102 V (1K)	B	127.8/38.6
R1704	7030003440	S.RES ERJ3GEYJ 102 V (1K)	T	138/37.5
R1705	7030003440	S.RES ERJ3GEYJ 102 V (1K)	B	141.5/73.4
R1706	7030003440	S.RES ERJ3GEYJ 102 V (1K)	B	130.6/75.2
R1707	7030003440	S.RES ERJ3GEYJ 102 V (1K)	B	150.2/73.1
R1708	7030003400	S.RES ERJ3GEYJ 471 V (470)	B	144.4/78
R1901	7030003560	S.RES ERJ3GEYJ 103 V (10K)	T	128.2/28.1
R2001	7030003440	S.RES ERJ3GEYJ 102 V (1K)	T	103/72.8
R2002	7030003200	S.RES ERJ3GEYJ 100 V (10)	T	105.2/73.4
R2003	7030003600	S.RES ERJ3GEYJ 223 V (22K)	T	103/74.1
R2004	7030003340	S.RES ERJ3GEYJ 151 V (150)	T	106.9/78.2
R2005	7030003280	S.RES ERJ3GEYJ 470 V (47)	T	103/75.7
C101	4030007090	S.CER C1608 CH 1H 470J-T	T	41/91.7
C102	4030007030	S.CER C1608 CH 1H 150J-T	T	43.6/90.2
C103	4030007120	S.CER C1608 CH 1H 820J-T	T	39.8/91.7
C104	4030009560	S.CER C1608 CH 1H R75B-T	T	42.1/89.1
C105	4030007070	S.CER C1608 CH 1H 330J-T	T	38.6/91.7
C106	4030019320	S.CER C1608 X7R 1C 105K-T	T	37.2/89.4
C108	4030006930	S.CER C1608 CH 1H 020C-T	B	82.8/75.3
C109	4030007050	S.CER C1608 CH 1H 220J-T	B	84.4/75.3
C110	4030019320	S.CER C1608 X7R 1C 105K-T	T	14.1/80.3
C111	4030011600	S.CER C1608 JB 1E 104K-T	T	9.4/70
C112	4030011600	S.CER C1608 JB 1E 104K-T	T	8.4/65.9
C113	4030010760	S.CER C1608 CH 1H 331J-T	B	83.3/70
C114	4030006900	S.CER C1608 JB 1H 103K-T	T	57.9/78
C115	4030006900	S.CER C1608 JB 1H 103K-T	T	70.4/75.4
C116	4030006900	S.CER C1608 JB 1H 103K-T	B	75.8/75
C117	4030006900	S.CER C1608 JB 1H 103K-T	B	88/76
C118	4030006900	S.CER C1608 JB 1H 103K-T	B	96.6/75.3
C151	4030011600	S.CER C1608 JB 1E 104K-T	T	49.5/86.8
C152	4030011600	S.CER C1608 JB 1E 104K-T	T	43.5/84
C153	4030011600	S.CER C1608 JB 1E 104K-T	T	52.1/82.5
C154	4030011600	S.CER C1608 JB 1E 104K-T	T	44/85.8
C155	4030011600	S.CER C1608 JB 1E 104K-T	T	48.6/79.4
C161	4030006900	S.CER C1608 JB 1H 103K-T	B	96.6/90.6
C163	4030006900	S.CER C1608 JB 1H 103K-T	B	108.9/83.4
C164	4030006900	S.CER C1608 JB 1H 103K-T	B	113/80.9
C165	4030019540	S.CER GRM31BR72J472KW01L	B	122.2/86.7
C201	4030007010	S.CER C1608 CH 1H 100D-T	T	7.3/20.3
C202	4030007120	S.CER C1608 CH 1H 820J-T	T	7.3/21.5
C203	4030007020	S.CER C1608 CH 1H 120J-T	T	5.5/22.2
C204	4030007120	S.CER C1608 CH 1H 820J-T	T	7.3/23
C205	4030011600	S.CER C1608 JB 1E 104K-T	T	5.5/24.8
C206	4030011600	S.CER C1608 JB 1E 104K-T	T	4.6/29.8
C207	4030011600	S.CER C1608 JB 1E 104K-T	T	8.9/39.9
C208	4030011600	S.CER C1608 JB 1E 104K-T	T	6/39.6
C209	4030011600	S.CER C1608 JB 1E 104K-T	T	2.9/39
C210	4030011600	S.CER C1608 JB 1E 104K-T	T	7.3/24.5
C251	4030011600	S.CER C1608 JB 1E 104K-T	B	13.6/72.5
C252	4030011600	S.CER C1608 JB 1E 104K-T	B	9.8/76.1
C271	4030018600	S.CER C1608 CH 1H 152J-T	T	8.9/80.1
C272	4030018590	S.CER C1608 CH 1H 122J-T	T	8.9/78.9
C273	4030018620	S.CER C1608 CH 1H 222J-T	T	10.5/77
C274	4030018620	S.CER C1608 CH 1H 222J-T	T	12/77
C275	4030018620	S.CER C1608 CH 1H 222J-T	T	13.5/77
C276	4030018600	S.CER C1608 CH 1H 152J-T	T	16/77.5
C301	4030011600	S.CER C1608 JB 1E 104K-T	T	42.2/17.8
C302	4030011600	S.CER C1608 JB 1E 104K-T	B	35/28.7
C303	4030011600	S.CER C1608 JB 1E 104K-T	B	28.4/25.5
C304	4030011600	S.CER C1608 JB 1E 104K-T	T	38.5/10.4
C330	4030011600	S.CER C1608 JB 1E 104K-T	B	112.5/58.2
C332	4510008540	S.ELE EEE1CA100SR	T	106.8/61.9
C334	4030011600	S.CER C1608 JB 1E 104K-T	B	114.3/58.9
C451	4030011600	S.CER C1608 JB 1E 104K-T	B	149.6/15.8
C452	4030018960	S.CER C3216 JB 1C 106MT-N	T	157.3/14.8
C453	4030011600	S.CER C1608 JB 1E 104K-T	B	149.6/17.8
C454	4030019500	S.CER GRM21BB31A106KE18 (GRM40 B)	B	145.6/16.1
C455	4030011600	S.CER C1608 JB 1E 104K-T	B	150.6/26.5
C456	4030019500	S.CER GRM21BB31A106KE18 (GRM40 B)	B	150.4/24.5
C457	4030007130	S.CER C1608 CH 1H 101J-T	B	149.5/35.8
C458	4030007130	S.CER C1608 CH 1H 101J-T	B	153.4/34.8
C459	4030007130	S.CER C1608 CH 1H 101J-T	B	149.5/33.8
C460	4030007130	S.CER C1608 CH 1H 101J-T	B	153.5/32.8
C461	4030017810	S.CER C1608 CH 1H 102J-T	B	149.6/31.8
C462	4030017810	S.CER C1608 CH 1H 102J-T	B	153.5/30.8
C463	4030017810	S.CER C1608 CH 1H 102J-T	B	149.6/29.8
C464	4030017810	S.CER C1608 CH 1H 102J-T	B	145.5/28.5
C465	4030017810	S.CER C1608 CH 1H 102J-T	B	154.1/28.4

M.=Mounted side (T: Mounted on the Top side, B: Mounted on the Bottom side)
S.=Surface mount

[RF UNIT]

REF NO.	PARTS NO.	DESCRIPTION	M.	H/V LOCATION
C466	4030007130	S.CER C1608 CH 1H 101J-T	B	149.6/21.8
C467	4030017810	S.CER C1608 CH 1H 102J-T	B	149.7/19.8
C468	4030011600	S.CER C1608 JB 1E 104K-T	B	153.5/18.8
C469	4510008510	S.ELE EEE1CA471P	T	141.8/7.4
C470	4030011600	S.CER C1608 JB 1E 104K-T	B	141.2/17.8
C471	4030017810	S.CER C1608 CH 1H 102J-T	B	158.6/17.1
C472	4030017810	S.CER C1608 CH 1H 102J-T	B	141.4/19.8
C473	4030007130	S.CER C1608 CH 1H 101J-T	B	141.4/21.8
C474	4030011600	S.CER C1608 JB 1E 104K-T	B	158/25.5
C475	4030017810	S.CER C1608 CH 1H 102J-T	B	158.7/28.1
C476	4030017810	S.CER C1608 CH 1H 102J-T	B	141.4/27.8
C477	4030017810	S.CER C1608 CH 1H 102J-T	B	141.5/29.8
C478	4030017810	S.CER C1608 CH 1H 102J-T	B	158.6/32
C479	4030017810	S.CER C1608 CH 1H 102J-T	B	141.3/31.8
C480	4030007130	S.CER C1608 CH 1H 101J-T	B	153.5/22.7
C481	4030007130	S.CER C1608 CH 1H 101J-T	B	157.9/21.9
C501	4030007170	S.CER C1608 CH 1H 221J-T	T	17.4/68.6
C502	4030011600	S.CER C1608 JB 1E 104K-T	T	18.2/66.6
C503	4030007110	S.CER C1608 CH 1H 680J-T	T	18.6/68.6
C504	4030007090	S.CER C1608 CH 1H 470J-T	T	19.3/59.1
C505	4030007090	S.CER C1608 CH 1H 470J-T	T	19.3/57.9
C506	4030007070	S.CER C1608 CH 1H 330J-T	T	16.1/57.2
C507	4030007070	S.CER C1608 CH 1H 330J-T	T	17.3/57.2
C508	4030007090	S.CER C1608 CH 1H 470J-T	T	19.3/56.4
C509	4030007090	S.CER C1608 CH 1H 470J-T	T	19.3/55.2
C510	4030007070	S.CER C1608 CH 1H 330J-T	T	12.4/51.8
C511	4030007070	S.CER C1608 CH 1H 330J-T	T	13.6/51.8
C512	4030007090	S.CER C1608 CH 1H 470J-T	T	18.2/52.6
C513	4030007090	S.CER C1608 CH 1H 470J-T	T	18.2/51.4
C514	4030007170	S.CER C1608 CH 1H 221J-T	T	18.2/47.7
C515	4030011600	S.CER C1608 JB 1E 104K-T	T	19.7/45
C516	4030007110	S.CER C1608 CH 1H 680J-T	T	18.2/46.4
C551	4030007160	S.CER C1608 CH 1H 181J-T	T	38.1/73.6
C552	4030011600	S.CER C1608 JB 1E 104K-T	T	37.4/67.8
C553	4030007090	S.CER C1608 CH 1H 470J-T	T	36.8/73.6
C554	4030007040	S.CER C1608 CH 1H 180J-T	T	39/63.9
C555	4030007090	S.CER C1608 CH 1H 470J-T	T	39/62.6
C556	4030007050	S.CER C1608 CH 1H 220J-T	T	37.1/61.9
C557	4030007030	S.CER C1608 CH 1H 150J-T	T	35.9/61.9
C558	4030006990	S.CER C1608 CH 1H 080D-T	T	39/61.1
C559	4030007090	S.CER C1608 CH 1H 470J-T	T	39/59.9
C560	4030007050	S.CER C1608 CH 1H 220J-T	T	31.5/56.1
C561	4030007030	S.CER C1608 CH 1H 150J-T	T	32.8/56.1
C562	4030007040	S.CER C1608 CH 1H 180J-T	T	38.1/56.6
C563	4030007090	S.CER C1608 CH 1H 470J-T	T	38.1/55.3
C564	4030007160	S.CER C1608 CH 1H 181J-T	T	38/50.7
C565	4030011600	S.CER C1608 JB 1E 104K-T	T	39.5/49.4
C566	4030007090	S.CER C1608 CH 1H 470J-T	T	38/52
C601	4030007040	S.CER C1608 CH 1H 180J-T	T	27.2/73.3
C602	4030011600	S.CER C1608 JB 1E 104K-T	T	27.5/67.8
C603	4030007140	S.CER C1608 CH 1H 121J-T	T	28.5/73.3
C604	4030007040	S.CER C1608 CH 1H 180J-T	T	29.4/62.7
C605	4030007070	S.CER C1608 CH 1H 330J-T	T	29.4/63.9
C606	4030007070	S.CER C1608 CH 1H 330J-T	T	26.2/61.9
C607	4030007010	S.CER C1608 CH 1H 100D-T	T	27.5/61.9
C609	4030007090	S.CER C1608 CH 1H 470J-T	T	29.4/59.9
C610	4030007070	S.CER C1608 CH 1H 330J-T	T	21.7/56
C611	4030007010	S.CER C1608 CH 1H 100D-T	T	23/56
C612	4030007040	S.CER C1608 CH 1H 180J-T	T	28.4/56.5
C613	4030007070	S.CER C1608 CH 1H 330J-T	T	28.4/55.2
C614	4030007040	S.CER C1608 CH 1H 180J-T	T	28.4/52.1
C615	4030011600	S.CER C1608 JB 1E 104K-T	T	29.8/49.6
C616	4030007140	S.CER C1608 CH 1H 121J-T	T	28.4/50.8
C651	4030007130	S.CER C1608 CH 1H 101J-T	T	46/73.3
C652	4030011600	S.CER C1608 JB 1E 104K-T	T	46.8/71.3
C653	4030007030	S.CER C1608 CH 1H 150J-T	T	47.2/73.3
C654	4030007050	S.CER C1608 CH 1H 220J-T	T	48.8/63.5
C655	4030007020	S.CER C1608 CH 1H 120J-T	T	48.8/62.2
C656	4030007050	S.CER C1608 CH 1H 220J-T	T	45.5/61.5
C658	4030007050	S.CER C1608 CH 1H 220J-T	T	48.8/60.7
C659	4030006980	S.CER C1608 CH 1H 070D-T	T	48.8/59.5
C660	4030007050	S.CER C1608 CH 1H 220J-T	T	40.9/56
C662	4030007050	S.CER C1608 CH 1H 220J-T	T	47.7/56.8
C663	4030007020	S.CER C1608 CH 1H 120J-T	T	47.7/55.6
C664	4030007130	S.CER C1608 CH 1H 101J-T	T	46.1/49.9
C665	4030011600	S.CER C1608 JB 1E 104K-T	T	47.6/52.3
C666	4030007030	S.CER C1608 CH 1H 150J-T	T	46.1/51.1
C701	4030007100	S.CER C1608 CH 1H 560J-T	B	45.1/69.2
C702	4030011600	S.CER C1608 JB 1E 104K-T	B	44/62.7
C704	4030007110	S.CER C1608 CH 1H 680J-T	B	47.7/62.3
C706	4030007100	S.CER C1608 CH 1H 560J-T	B	44.6/51.7
C707	4030011600	S.CER C1608 JB 1E 104K-T	B	42.5/58.7
C752	4030011600	S.CER C1608 JB 1E 104K-T	B	32.1/73.9
C756	4030007090	S.CER C1608 CH 1H 470J-T	B	35.6/64.4
C757	4030006990	S.CER C1608 CH 1H 080D-T	B	33.8/64.4
C760	4030007090	S.CER C1608 CH 1H 470J-T	B	35.6/61.1
C765	4030011600	S.CER C1608 JB 1E 104K-T	B	39/52.3
C801	4030011600	S.CER C1608 JB 1E 104K-T	T	28.9/36
C803	4030018600	S.CER C1608 CH 1H 152J-T	T	29.6/39.5
C804	4030018610	S.CER C1608 CH 1H 182J-T	T	28.4/39.5
C805	4030018610	S.CER C1608 CH 1H 182J-T	T	31.5/39.6
C806	4030018600	S.CER C1608 CH 1H 152J-T	T	31.5/37.2
C807	4030018600	S.CER C1608 CH 1H 152J-T	T	31.5/38.4
C808	4030018600	S.CER C1608 CH 1H 152J-T	T	32/41.6
C809	4030018610	S.CER C1608 CH 1H 182J-T	T	33.3/41.6
C810	4030011600	S.CER C1608 JB 1E 104K-T	T	19.6/37.7
C845	4030011770	S.CER C1608 CH 1H 060B-T	B	29.4/62.4
C851	4030007140	S.CER C1608 CH 1H 121J-T	B	25/67
C852	4030011600	S.CER C1608 JB 1E 104K-T	B	28.7/67.4
C853	4030011770	S.CER C1608 CH 1H 060B-T	B	29.4/64
C855	4030009550	S.CER C1608 CH 1H 2R5B-T	B	23.2/61.1
C856	4030009920	S.CER C1608 CH 1H 050B-T	B	25/61.1
C857	4030007010	S.CER C1608 CH 1H 100D-T	B	29.4/57.8
C858	4030009920	S.CER C1608 CH 1H 050B-T	B	23.2/57.8

[RF UNIT]

REF NO.	PARTS NO.	DESCRIPTION	M.	H/V LOCATION
C859	4030009550	S.CER C1608 CH 1H 2R5B-T	B	25/57.8
C860	4030011770	S.CER C1608 CH 1H 060B-T	B	29.4/54.2
C861	4030011770	S.CER C1608 CH 1H 060B-T	B	29.4/56
C862	4030007030	S.CER C1608 CH 1H 150J-T	B	25/52
C863	4030007140	S.CER C1608 CH 1H 121J-T	B	25/47.3
C864	4030011600	S.CER C1608 JB 1E 104K-T	B	29.3/50.1
C901	4030011600	S.CER C1608 JB 1E 104K-T	T	50.1/13.8
C951	4030011600	S.CER C1608 JB 1E 104K-T	T	49.6/30.4
C952	4030007170	S.CER C1608 CH 1H 221J-T	T	48.4/25.2
C971	4030011600	S.CER C1608 JB 1E 104K-T	B	35.7/39.7
C1001	4030007050	S.CER C1608 CH 1H 220J-T	T	66.4/20.6
C1002	4030007140	S.CER C1608 CH 1H 121J-T	T	59.2/22.6
C1004	4030007070	S.CER C1608 CH 1H 330J-T	T	66.4/23
C1005	4030007080	S.CER C1608 CH 1H 390J-T	T	66.4/21.8
C1006	4030007090	S.CER C1608 CH 1H 470J-T	T	59.9/25.3
C1007	4030007080	S.CER C1608 CH 1H 390J-T	T	66.4/24.2
C1008	4030007100	S.CER C1608 CH 1H 560J-T	T	66.4/25.4
C1009	4030007030	S.CER C1608 CH 1H 150J-T	T	64.4/26.6
C1010	4030007100	S.CER C1608 CH 1H 560J-T	T	66.4/26.6
C1011	4030011600	S.CER C1608 JB 1E 104K-T	T	66.4/27.8
C1012	4030007030	S.CER C1608 CH 1H 150J-T	T	73.2/29
C1013	4030011600	S.CER C1608 JB 1E 104K-T	T	73/21.4
C1014	4030007020	S.CER C1608 CH 1H 120J-T	B	86.2/27
C1015	4030011600	S.CER C1608 JB 1E 104K-T	B	85.9/31.4
C1016	4030011600	S.CER C1608 JB 1E 104K-T	T	87.2/30.9
C1017	4030011600	S.CER C1608 JB 1E 104K-T	T	87.2/25.7
C1018	4030011600	S.CER C1608 JB 1E 104K-T	B	85.9/24.4
C1019	4030007030	S.CER C1608 CH 1H 150J-T	T	93.2/30.3
C1020	4030007030	S.CER C1608 CH 1H 150J-T	T	93.1/25.1
C1021	4030011600	S.CER C1608 JB 1E 104K-T	B	101.6/27.7
C1022	4030011340	S.CER C1608 CH 1H 471J-T	T	103.8/24.9
C1023	4030006900	S.CER C1608 JB 1H 103K-T	T	106.4/24.9
C1024	4030011340	S.CER C1608 CH 1H 471J-T	T	105.8/29.9
C1025	4030011600	S.CER C1608 JB 1E 104K-T	T	100.9/33
C1026	4030006900	S.CER C1608 JB 1H 103K-T	T	108.4/29.9
C1027	4030006900	S.CER C1608 JB 1H 103K-T	T	110.1/28.5
C1028	4030006900	S.CER C1608 JB 1H 103K-T	T	110.1/26.5
C1029	4030011600	S.CER C1608 JB 1E 104K-T	T	109.6/33.8
C1030	4030019500	S.CER GRM21BB31A106KE18 (GRM40 B)	B	105.5/31
C1031	4030011600	S.CER C1608 JB 1E 104K-T	T	112.6/19.5
C1032	4030006900	S.CER C1608 JB 1H 103K-T	T	112.5/14.7
C1033	4030011600	S.CER C1608 JB 1E 104K-T	T	108.6/11.6
C1034	4030009530	S.CER C1608 CH 1H 030B-T	T	112.6/20.7
C1035	4030007030	S.CER C1608 CH 1H 150J-T	B	112.6/19.6
C1036	4540000020	S.TRI TZY2Z060A001R00 (TZVY2Z060A110)	T	113.5/22.7
C1037	4030011600	S.CER C1608 JB 1E 104K-T	B	96.2/12.5
C1038	4510008540	S.ELE EEE1CA100SR	T	104.9/14
C1039	4030011600	S.CER C1608 JB 1E 104K-T	B	99.5/12.5
C1040	4030011600	S.CER C1608 JB 1E 104K-T	B	113.7/13.9
C1041	4030009920	S.CER C1608 CH 1H 050B-T	T	114.2/24.8
C1042	4030017810	S.CER C1608 CH 1H 102J-T	B	113.3/30.4
C1101	4030007040	S.CER C1608 CH 1H 180J-T	T	89.6/17
C1102	4030006980	S.CER C1608 CH 1H 070D-T	T	89.6/15.8
C1103	4030008560	S.CER C1608 CH 1H 300J-T	T	87/17
C1104	4030007020	S.CER C1608 CH 1H 120J-T	T	87/15.8
C1105	4030007060	S.CER C1608 CH 1H 270J-T	T	85.2/16.5
C1107	4030006900	S.CER C1608 JB 1H 103K-T	T	77.7/15.3
C1108	4030011600	S.CER C1608 JB 1E 104K-T	T	76.1/12
C1110	4030006900	S.CER C1608 JB 1H 103K-T	T	77.4/20.9
C1111	4030006900	S.CER C1608 JB 1H 103K-T	T	73/20.2
C1201	4030007050	S.CER C1608 CH 1H 220J-T	T	67.1/37.9
C1202	4030007140	S.CER C1608 CH 1H 121J-T	T	63.9/39.9
C1204	4030007070	S.CER C1608 CH 1H 330J-T	T	67.1/40.3
C1205	4030007080	S.CER C1608 CH 1H 390J-T	T	67.1/39.1
C1206	4030007090	S.CER C1608 CH 1H 470J-T	T	61/44.2
C1207	4030007080	S.CER C1608 CH 1H 390J-T	T	67.1/41.5
C1208	4030007100	S.CER C1608 CH 1H 560J-T	T	67.1/42.7
C1209	4030007030	S.CER C1608 CH 1H 150J-T	T	64.9/44.5
C1210	4030007100	S.CER C1608 CH 1H 560J-T	T	67.1/43.9
C1211	4030011600	S.CER C1608 JB 1E 104K-T	T	67.1/45.1
C1212	4030007030	S.CER C1608 CH 1H 150J-T	B	73.8/50.6
C1213	4030011600	S.CER C1608 JB 1E 104K-T	T	72.5/43.3
C1214	4030007020	S.CER C1608 CH 1H 120J-T	B	85.3/48.1
C1215	4030011600	S.CER C1608 JB 1E 104K-T	B	85.8/50.8
C1216	4030011600	S.CER C1608 JB 1E 104K-T	T	86.3/51.7
C1217	4030011600	S.CER C1608 JB 1E 104K-T	T	86.3/45.7
C1218	4030011600	S.CER C1608 JB 1E 104K-T	B	86.2/45.6
C1219	4030007030	S.CER C1608 CH 1H 150J-T	T	93/50.8
C1220	4030007030	S.CER C1608 CH 1H 150J-T	T	93/45.3
C1221	4030011600	S.CER C1608 JB 1E 104K-T	B	97.7/48.2
C1222	4030007040	S.CER C1608 CH 1H 180J-T	B	99.4/60.2
C1223	4030011340	S.CER C1608 CH 1H 471J-T	T	103.9/43.9
C1224	4030006900	S.CER C1608 JB 1H 103K-T	B	104.7/55.5
C1225	4030006900	S.CER C1608 JB 1H 103K-T	T	106.5/43.9
C1226	4030011340	S.CER C1608 CH 1H 471J-T	T	103.9/48.6
C1227	4030011600	S.CER C1608 JB 1E 104K-T	T	103.3/55.2
C1228	4030006900	S.CER C1608 JB 1H 103K-T	T	105.8/49.1
C1229	4030006900	S.CER C1608 JB 1H 103K-T	T	108.9/48.6
C1230	4030006900	S.CER C1608 JB 1H 103K-T	T	109.6/45.5
C1231	4030011600	S.CER C1608 JB 1E 104K-T	T	102.6/60.5
C1232	4030019500	S.CER GRM21BB31A106KE18 (GRM40 B)	T	102.5/64.1
C1233	4030011600	S.CER C1608 JB 1E 104K-T	T	109/56.3
C1234	4030006900	S.CER C1608 JB 1H 103K-T	T	114.5/53.2
C1235	4030011600	S.CER C1608 JB 1E 104K-T	T	111.1/57.2
C1236	4030009530	S.CER C1608 CH 1H 030B-T	T	110.3/54.6
C1237	4030007030	S.CER C1608 CH 1H 150J-T	T	114.5/46.1
C1238	4540000020	S.TRI TZY2Z060A001R00 (TZVY2Z060A110)	T	112.4/53.2
C1239	4030011600	S.CER C1608 JB 1E 104K-T	B	114.8/65.2
C1240	4030007000	S.CER C1608 CH 1H 090D-T	B	102.8/52.1
C1241	4030011600	S.CER C1608 JB 1E 104K-T	B	88.8/59.4

M.=Mounted side (T: Mounted on the Top side, B: Mounted on the Bottom side)
S.=Surface mount

[RF UNIT]

REF NO.	PARTS NO.	DESCRIPTION		M.	H/V LOCATION
C1242	4030011600	S.CER	C1608 JB 1E 104K-T	B	93/55.8
C1243	4030009920	S.CER	C1608 CH 1H 050B-T	T	112.1/44
C1245	4030017810	S.CER	C1608 CH 1H 102J-T	B	106/61.5
C1246	4030007010	S.CER	C1608 CH 1H 100D-T	T	99.1/58.2
C1247	4550007650	S.TAN	F931V105MAABMA	B	106.9/53.5
C1301	4030006900	S.CER	C1608 JB 1H 103K-T	T	96.7/57.5
C1302	4030006900	S.CER	C1608 JB 1H 103K-T	B	102.9/61.2
C1303	4030006900	S.CER	C1608 JB 1H 103K-T	T	96.4/64.1
C1304	4030007040	S.CER	C1608 CH 1H 180J-T	T	92.8/59.7
C1305	4030006980	S.CER	C1608 CH 1H 070D-T	T	91.8/62
C1306	4030008560	S.CER	C1608 CH 1H 300J-T	T	91/58.6
C1307	4030007020	S.CER	C1608 CH 1H 120J-T	T	89.1/59
C1308	4030007060	S.CER	C1608 CH 1H 270J-T	T	91/59.8
C1310	4030006900	S.CER	C1608 JB 1H 103K-T	T	82.2/60.8
C1311	4030011600	S.CER	C1608 JB 1E 104K-T	T	77/58.5
C1313	4030006900	S.CER	C1608 JB 1H 103K-T	T	79.9/64.3
C1314	4030006900	S.CER	C1608 JB 1H 103K-T	B	70.1/61.2
C1400	4030011600	S.CER	C1608 JB 1E 104K-T	T	49.5/46.2
C1401	4030011600	S.CER	C1608 JB 1E 104K-T	T	54.5/38.1
C1402	4030011600	S.CER	C1608 JB 1E 104K-T	T	50.7/37.6
C1403	4030011600	S.CER	C1608 JB 1E 104K-T	T	52.9/41.9
C1404	4030011600	S.CER	C1608 JB 1E 104K-T	T	54.8/42.4
C1405	4030007120	S.CER	C1608 CH 1H 820J-T	T	54/44.3
C1406	4030007040	S.CER	C1608 CH 1H 180J-T	T	51.4/48.6
C1407	4030007130	S.CER	C1608 CH 1H 101J-T	T	54/48.6
C1408	4030007110	S.CER	C1608 CH 1H 680J-T	T	53.6/50.5
C1409	4030007100	S.CER	C1608 CH 1H 560J-T	T	54.1/52.4
C1452	4030009920	S.CER	C1608 CH 1H 050B-T	T	82.6/71
C1453	4030011600	S.CER	C1608 JB 1E 104K-T	B	86/72
C1454	4030011600	S.CER	C1608 JB 1E 104K-T	B	91.1/68.2
C1501	4030006900	S.CER	C1608 JB 1H 103K-T	T	98.4/68.6
C1502	4030006900	S.CER	C1608 JB 1H 103K-T	T	99.7/71.3
C1550	4030017810	S.CER	C1608 CH 1H 102J-T	B	125.1/64.3
C1551	4030007100	S.CER	C1608 CH 1H 560J-T	B	96.3/70.1
C1552	4030006980	S.CER	C1608 CH 1H 070D-T	B	98.7/70.9
C1553	4030007100	S.CER	C1608 CH 1H 560J-T	B	101.1/71
C1556	4030006900	S.CER	C1608 JB 1H 103K-T	B	116.6/66.7
C1557	4030007010	S.CER	C1608 CH 1H 100D-T	B	117.1/69.9
C1558	4030011600	S.CER	C1608 JB 1E 104K-T	B	119.2/67.4
C1559	4030006970	S.CER	C1608 CH 1H 060D-T	B	124/66.7
C1560	4030017810	S.CER	C1608 CH 1H 102J-T	B	125.9/66.7
C1561	4030017810	S.CER	C1608 CH 1H 102J-T	B	129.1/68.7
C1563	4030017810	S.CER	C1608 CH 1H 102J-T	B	124.9/58.9
C1601	4030007170	S.CER	C1608 CH 1H 221J-T	T	130.3/33.1
C1603	4030006900	S.CER	C1608 JB 1H 103K-T	T	127.4/32.7
C1604	4030006900	S.CER	C1608 JB 1H 103K-T	T	128.2/30.7
C1651	4030009920	S.CER	C1608 CH 1H 050B-T	B	125.8/25.4
C1701	4030006900	S.CER	C1608 JB 1H 103K-T	B	128.3/30.2
C1704	4030006900	S.CER	C1608 JB 1H 103K-T	B	149.7/84.4
C1705	4030006900	S.CER	C1608 JB 1H 103K-T	B	159/43.2
C1706	4030006900	S.CER	C1608 JB 1H 103K-T	B	127.6/35.4
C1707	4030006900	S.CER	C1608 JB 1H 103K-T	T	140.2/36.7
C1708	4030006900	S.CER	C1608 JB 1H 103K-T	B	138.1/71.3
C1709	4030006900	S.CER	C1608 JB 1H 103K-T	B	130.6/71
C1710	4030006900	S.CER	C1608 JB 1H 103K-T	B	147.2/73.1
C1901	4030011600	S.CER	C1608 JB 1E 104K-T	T	128.2/29.5
C2001	4030006900	S.CER	C1608 JB 1H 103K-T	T	104.5/71.4
C2002	4030011600	S.CER	C1608 JB 1E 104K-T	T	103/77.1
C2003	4030006900	S.CER	C1608 JB 1H 103K-T	T	109.7/77
C9001	4030006900	S.CER	C1608 JB 1H 103K-T	T	4.6/59.4
C9002	4030006900	S.CER	C1608 JB 1H 103K-T	T	7.4/59.4
C9007	4030006900	S.CER	C1608 JB 1H 103K-T	T	42/38.9
C9008	4030006900	S.CER	C1608 JB 1H 103K-T	T	42/36.1
C9011	4030006900	S.CER	C1608 JB 1H 103K-T	T	26/82.4
C9012	4030006900	S.CER	C1608 JB 1H 103K-T	T	26/79.6
C9015	4030006900	S.CER	C1608 JB 1H 103K-T	T	54.6/67.5
C9016	4030006900	S.CER	C1608 JB 1H 103K-T	T	57.4/67.5
C9018	4030006900	S.CER	C1608 JB 1H 103K-T	T	20.6/17.5
C9020	4030006900	S.CER	C1608 JB 1H 103K-T	T	23.4/17.5
C9021	4030006900	S.CER	C1608 JB 1H 103K-T	T	49.4/17.5
C9024	4030006900	S.CER	C1608 JB 1H 103K-T	T	46.6/17.5
C9026	4030006900	S.CER	C1608 JB 1H 103K-T	T	44.1/42.9
C9027	4030006900	S.CER	C1608 JB 1H 103K-T	T	44.1/40.1
C9031	4030006900	S.CER	C1608 JB 1H 103K-T	T	154.9/54.3
C9035	4030006900	S.CER	C1608 JB 1H 103K-T	T	142.9/62.7
C9036	4030006900	S.CER	C1608 JB 1H 103K-T	T	146.3/62.7
C9061	4030006900	S.CER	C1608 JB 1H 103K-T	T	150.6/77.8
C9062	4030006900	S.CER	C1608 JB 1H 103K-T	T	149/74.4
C9065	4030006900	S.CER	C1608 JB 1H 103K-T	T	148.9/42.2
C9066	4030006900	S.CER	C1608 JB 1H 103K-T	T	150.6/38.8
C9071	4030006900	S.CER	C1608 JB 1H 103K-T	T	137.9/77.8
C9072	4030006900	S.CER	C1608 JB 1H 103K-T	T	137.9/74.4
C9075	4030006900	S.CER	C1608 JB 1H 103K-T	T	137.9/42.2
C9076	4030006900	S.CER	C1608 JB 1H 103K-T	T	136.1/38.8
C9081	4030006900	S.CER	C1608 JB 1H 103K-T	T	125.2/77.8
C9082	4030006900	S.CER	C1608 JB 1H 103K-T	T	125.2/74.4
C9085	4030006900	S.CER	C1608 JB 1H 103K-T	T	125.2/42.2
C9086	4030006900	S.CER	C1608 JB 1H 103K-T	T	125.2/38.8
RL101	6330001860	REL	UA2-12NU		
RL102	6330001860	REL	UA2-12NU		
RL103	6330001860	REL	UA2-12NU		
RL104	6330001860	REL	UA2-12NU		
RL105	6330001860	REL	UA2-12NU		
RL161	6330000540	REL	2-1419131-2(OMR-109F)		
J101	6510007020	CON	TMP-J01X-V6		
J102	6450001130	CON	JPJ2042-01-110		
J103	6450001800	CON	JPJ1044-01-010		
J161	6450001130	CON	JPJ2042-01-110		
J201	6510007020	CON	TMP-J01X-V6		
J451	6510022581	S.CON	24FMN-BMTTR-A-TBT(LF)(SN)	T	151.7/24.3

[RF UNIT]

REF NO.	PARTS NO.	DESCRIPTION		M.	H/V LOCATION
J801	6910016430	CON	IMSA-9210B-1-05Z869-PT1		
J802	6910016430	CON	IMSA-9210B-1-05Z869-PT1		
J803	6910016430	CON	IMSA-9210B-1-05Z869-PT1		
J804	6910016430	CON	IMSA-9210B-1-05Z869-PT1		
J805	6910016430	CON	IMSA-9210B-1-05Z869-PT1		
J807	6910016430	CON	IMSA-9210B-1-05Z869-PT1		
J809	6910016430	CON	IMSA-9210B-1-05Z869-PT1		
J951	6510007020	CON	TMP-J01X-V6		
J1101	6510007020	CON	TMP-J01X-V6		
J1301	6510007020	CON	TMP-J01X-V6		
J1651	6510007020	CON	TMP-J01X-V6		
J1701	6510007020	CON	TMP-J01X-V6		
J1702	6910004741	CON	IMSA-9202B-1-03Z041-PT1		
J1703	6910004741	CON	IMSA-9202B-1-03Z041-PT1		
J1704	6910004741	CON	IMSA-9202B-1-03Z041-PT1		
J1705	6910004741	CON	IMSA-9202B-1-03Z041-PT1		
J1706	6910004741	CON	IMSA-9202B-1-03Z041-PT1		
J1707	6910004741	CON	IMSA-9202B-1-03Z041-PT1		
J1708	6910004741	CON	IMSA-9202B-1-03Z041-PT1		
J1709	6910004741	CON	IMSA-9202B-1-03Z041-PT1		
J2001	6510007020	CON	TMP-J01X-V6		
EP451	6910015970	S.BEA	MMZ1608B 301CT-AS	T	145.6/35.8
EP452	6910015970	S.BEA	MMZ1608B 301CT-AS	T	156.3/36.2
EP453	6910015970	S.BEA	MMZ1608B 301CT-AS	T	145.6/33.8
EP454	6910015970	S.BEA	MMZ1608B 301CT-AS	T	157.6/32.8
EP455	6910015970	S.BEA	MMZ1608B 301CT-AS	T	145.6/31.8
EP456	6910015970	S.BEA	MMZ1608B 301CT-AS	T	157.6/30.8
EP457	6910015970	S.BEA	MMZ1608B 301CT-AS	T	145.6/29.8
EP458	6910015970	S.BEA	MMZ1608B 301CT-AS	T	145.6/27.8
EP459	6910015970	S.BEA	MMZ1608B 301CT-AS	T	157.5/26.8
EP460	6910019900	S.BEA	MPZ1608S601AT	T	157.5/24.8
EP461	6910019900	S.BEA	MPZ1608S601AT	T	145.6/21.8
EP462	6910019900	S.BEA	MPZ1608S601AT	T	145.6/19.8
EP463	6910019900	S.BEA	MPZ1608S601AT	T	157.4/18.8
EP464	6910019900	S.BEA	MPZ1608S601AT	T	145.6/17.8
EP465	6910019900	S.BEA	MPZ1608S601AT	T	35.5/7.5
EP466	6910019900	S.BEA	MPZ1608S601AT	T	32.6/4.2
EP467	6910019900	S.BEA	MPZ1608S601AT	T	157.5/22.8
EP1001	6910015970	S.BEA	MMZ1608B 301CT-AS	B	112.5/32.4
EP1009	6910019900	S.BEA	MPZ1608S601AT	T	120.6/9.9
EP1201	6910015970	S.BEA	MMZ1608B 301CT-AS	B	106/63
EP1406	6910015970	S.BEA	MMZ1608B 301CT-AS	T	50.7/44.3
EP1551	6910015970	S.BEA	MMZ1608B 301CT-AS	B	127.5/65.1
EP1701	6910015970	S.BEA	MMZ1608B 301CT-AS	B	158.2/41
EP1702	6910015970	S.BEA	MMZ1608B 301CT-AS	B	129.9/36.2
EP1703	6910015970	S.BEA	MMZ1608B 301CT-AS	T	137.2/35.5
EP1901	6910015970	S.BEA	MMZ1608B 301CT-AS	T	133.6/30
MP1	8930065741	SPR	2590 D-EARTH SPRING-1	B	100.3/94.8
MP2	8930065741	SPR	2590 D-EARTH SPRING-1	B	68.3/94.8
MP3	8930065741	SPR	2590 D-EARTH SPRING-1	B	26.3/94.8

M.=Mounted side (T: Mounted on the Top side, B: Mounted on the Bottom side)
S.=Surface mount

[BPF UNIT]

REF NO.	PARTS NO.	DESCRIPTION	M.	H/V LOCATION
D3201	1750000581	S.DIO 1SV307(TPH3,F)	B	39.6/48.2
D3202	1750000581	S.DIO 1SV307(TPH3,F)	B	48.2/9.2
D3301	1750000581	S.DIO 1SV307(TPH3,F)	B	33.9/45.3
D3302	1750000581	S.DIO 1SV307(TPH3,F)	B	30.9/3.5
D3401	1750000581	S.DIO 1SV307(TPH3,F)	B	21.7/44.3
D3402	1750000581	S.DIO 1SV307(TPH3,F)	B	27.5/5.7
D3501	1750000581	S.DIO 1SV307(TPH3,F)	B	36.5/48.4
D3502	1750000581	S.DIO 1SV307(TPH3,F)	B	40/10.5
D3601	1750000581	S.DIO 1SV307(TPH3,F)	B	26.6/41.6
D3602	1750000581	S.DIO 1SV307(TPH3,F)	B	27.5/3.9
L3201	6180003540	COI SP0406-3R9K-6		
L3202	6180003580	COI SP0406-120K-6		
L3203	6180003580	COI SP0406-120K-6		
L3204	6180003540	COI SP0406-3R9K-6		
L3205	6180003580	COI SP0406-120K-6		
L3301	6180003550	COI SP0406-4R7K-6		
L3302	6180003560	COI SP0406-5R6K-6		
L3303	6180003560	COI SP0406-5R6K-6		
L3304	6180003550	COI SP0406-4R7K-6		
L3305	6180003560	COI SP0406-5R6K-6		
L3401	6180003410	COI SP0406-2R2K-6		
L3402	6180003510	COI SP0406-6R8K-6		
L3403	6180003510	COI SP0406-6R8K-6		
L3404	6180003410	COI SP0406-2R2K-6		
L3405	6180003510	COI SP0406-6R8K-6		
L3501	6180003410	COI SP0406-2R2K-6		
L3502	6180003570	COI SP0406-3R3K-6		
L3503	6180003570	COI SP0406-3R3K-6		
L3504	6180003410	COI SP0406-2R2K-6		
L3505	6180003570	COI SP0406-3R3K-6		
L3601	6180003390	COI SP0406-1R2K-6		
L3602	6180003490	COI SP0406-2R7K-6		
L3603	6180003490	COI SP0406-2R7K-6		
L3604	6180003390	COI SP0406-1R2K-6		
L3605	6180003490	COI SP0406-2R7K-6		
R3201	7030003320	S.RES ERJ3GEYJ 101 V (100)	B	54.2/39.5
R3202	7030003320	S.RES ERJ3GEYJ 101 V (100)	B	56.9/25.8
R3301	7030003320	S.RES ERJ3GEYJ 101 V (100)	B	31.3/39.2
R3302	7030003320	S.RES ERJ3GEYJ 101 V (100)	B	30.2/12.7
R3401	7030003320	S.RES ERJ3GEYJ 101 V (100)	B	6/32.5
R3402	7030003320	S.RES ERJ3GEYJ 101 V (100)	B	6/17.5
R3501	7030003320	S.RES ERJ3GEYJ 101 V (100)	B	47.4/42.4
R3502	7030003320	S.RES ERJ3GEYJ 101 V (100)	B	45.2/23.4
R3601	7030003320	S.RES ERJ3GEYJ 101 V (100)	B	22/40.5
R3602	7030003320	S.RES ERJ3GEYJ 101 V (100)	B	20.2/11.1
C3201	4030017810	S.CER C1608 CH 1H 102J-T	B	53.6/41.5
C3202	4030011600	S.CER C1608 JB 1E 104K-T	B	51/41.6
C3203	4030017810	S.CER C1608 CH 1H 102J-T	B	53.6/43.3
C3204	4030010760	S.CER C1608 CH 1H 331J-T	B	50.4/39.2
C3205	4030007140	S.CER C1608 CH 1H 121J-T	B	50.4/37.4
C3206	4030007160	S.CER C1608 CH 1H 181J-T	B	48/33.6
C3207	4030007060	S.CER C1608 CH 1H 270J-T	B	48/35.4
C3208	4030010760	S.CER C1608 CH 1H 331J-T	B	49.4/31.8
C3209	4030007090	S.CER C1608 CH 1H 470J-T	B	49.4/30
C3210	4030007160	S.CER C1608 CH 1H 181J-T	B	47.9/27.3
C3211	4030007060	S.CER C1608 CH 1H 270J-T	B	49.7/27.3
C3212	4030010760	S.CER C1608 CH 1H 331J-T	B	49.4/24.6
C3213	4030007140	S.CER C1608 CH 1H 121J-T	B	49.4/22.8
C3214	4030017810	S.CER C1608 CH 1H 102J-T	B	53/20.3
C3215	4030011600	S.CER C1608 JB 1E 104K-T	B	53/24.8
C3216	4030017810	S.CER C1608 CH 1H 102J-T	B	53/22.1
C3301	4030017800	S.CER C1608 CH 1H 561J-T	B	29.2/34.8
C3302	4030011600	S.CER C1608 JB 1E 104K-T	B	31.2/31.2
C3303	4030010760	S.CER C1608 CH 1H 331J-T	B	29.2/33
C3304	4030007080	S.CER C1608 CH 1H 390J-T	B	31.2/29.4
C3305	4030010760	S.CER C1608 CH 1H 331J-T	B	31.2/27.6
C3306	4030010760	S.CER C1608 CH 1H 331J-T	B	34.4/25
C3307	4030007100	S.CER C1608 CH 1H 560J-T	B	32.6/25
C3308	4030007090	S.CER C1608 CH 1H 470J-T	B	30/24.4
C3309	4030010760	S.CER C1608 CH 1H 331J-T	B	30/22.6
C3310	4030010760	S.CER C1608 CH 1H 331J-T	B	32.6/21.3
C3311	4030007100	S.CER C1608 CH 1H 560J-T	B	34.4/21.3
C3312	4030007080	S.CER C1608 CH 1H 390J-T	B	30/20.6
C3313	4030010760	S.CER C1608 CH 1H 331J-T	B	31.2/18.8
C3314	4030017800	S.CER C1608 CH 1H 561J-T	B	32.2/12.9
C3315	4030011600	S.CER C1608 JB 1E 104K-T	B	29.3/16.7
C3316	4030010760	S.CER C1608 CH 1H 331J-T	B	34/12.9
C3401	4030011330	S.CER C1608 CH 1H 391J-T	B	10.2/32
C3402	4030011600	S.CER C1608 JB 1E 104K-T	B	10.2/30.2
C3403	4030017800	S.CER C1608 CH 1H 561J-T	B	10.2/33.8
C3404	4030007160	S.CER C1608 CH 1H 181J-T	B	10.2/26.6
C3405	4030007070	S.CER C1608 CH 1H 330J-T	B	10.2/28.4
C3406	4030007120	S.CER C1608 CH 1H 820J-T	B	12.9/27.4
C3407	4030007030	S.CER C1608 CH 1H 150J-T	B	14.7/27.4
C3408	4030007140	S.CER C1608 CH 1H 121J-T	B	11.5/22.8
C3409	4030007100	S.CER C1608 CH 1H 560J-T	B	11.5/24.6
C3410	4030007120	S.CER C1608 CH 1H 820J-T	B	15.9/20.7
C3411	4030007030	S.CER C1608 CH 1H 150J-T	B	14.1/20.7
C3412	4030007160	S.CER C1608 CH 1H 181J-T	B	13.5/16.4
C3413	4030007070	S.CER C1608 CH 1H 330J-T	B	13.5/18.2
C3414	4030011330	S.CER C1608 CH 1H 391J-T	B	13.8/11.3
C3415	4030011600	S.CER C1608 JB 1E 104K-T	B	12/14.7
C3416	4030017800	S.CER C1608 CH 1H 561J-T	B	12/11.3
C3501	4030010760	S.CER C1608 CH 1H 331J-T	B	45.4/42.4
C3502	4030011600	S.CER C1608 JB 1E 104K-T	B	41.8/40.8
C3503	4030007150	S.CER C1608 CH 1H 151J-T	B	43.6/42.4
C3504	4030007060	S.CER C1608 CH 1H 270J-T	B	40.8/38.2
C3505	4030007150	S.CER C1608 CH 1H 151J-T	B	40.8/36.4

[BPF UNIT]

REF NO.	PARTS NO.	DESCRIPTION	M.	H/V LOCATION
C3506	4030007140	S.CER C1608 CH 1H 121J-T	B	38/34.5
C3507	4030007060	S.CER C1608 CH 1H 270J-T	B	38/32.7
C3508	4030007010	S.CER C1608 CH 1H 100D-T	B	39.3/30.9
C3509	4030007150	S.CER C1608 CH 1H 151J-T	B	39.3/29.1
C3510	4030007140	S.CER C1608 CH 1H 121J-T	B	38.8/26.4
C3511	4030007060	S.CER C1608 CH 1H 270J-T	B	40.6/26.4
C3512	4030007060	S.CER C1608 CH 1H 270J-T	B	39.3/23.7
C3513	4030007150	S.CER C1608 CH 1H 151J-T	B	38.8/21.9
C3514	4030010760	S.CER C1608 CH 1H 331J-T	B	42.6/19.6
C3515	4030011600	S.CER C1608 JB 1E 104K-T	B	42.6/23.2
C3516	4030007150	S.CER C1608 CH 1H 151J-T	B	42.6/21.4
C3601	4030007170	S.CER C1608 CH 1H 221J-T	B	20.8/34.8
C3602	4030011600	S.CER C1608 JB 1E 104K-T	B	22/42.4
C3603	4030007170	S.CER C1608 CH 1H 221J-T	B	20.8/33
C3604	4030007130	S.CER C1608 CH 1H 101J-T	B	21.8/29.4
C3605	4030007050	S.CER C1608 CH 1H 220J-T	B	21.8/31.2
C3606	4030007080	S.CER C1608 CH 1H 390J-T	B	22/26.8
C3607	4030007070	S.CER C1608 CH 1H 330J-T	B	23.8/26.8
C3608	4030007120	S.CER C1608 CH 1H 820J-T	B	21.8/22.2
C3609	4030007050	S.CER C1608 CH 1H 220J-T	B	21.8/24
C3610	4030007080	S.CER C1608 CH 1H 390J-T	B	24.4/20.8
C3611	4030007070	S.CER C1608 CH 1H 330J-T	B	26.2/20.8
C3612	4030007130	S.CER C1608 CH 1H 101J-T	B	23/18.2
C3613	4030007050	S.CER C1608 CH 1H 220J-T	B	23/16.4
C3614	4030007170	S.CER C1608 CH 1H 221J-T	B	22.2/11.3
C3615	4030011600	S.CER C1608 JB 1E 104K-T	B	21.5/14.2
C3616	4030007170	S.CER C1608 CH 1H 221J-T	B	24/11.3

M.=Mounted side (T: Mounted on the Top side, B: Mounted on the Bottom side)
S.=Surface mount

[PREAMP UNIT]

REF NO.	PARTS NO.	DESCRIPTION		M.	H/V LOCATION
Q4101	1590003680	S.TRA	KRC402 RTK/P	T	49.4/33.7
Q4102	1590003770	S.TRA	KRA302E-RTK/P	T	47/31.7
Q4201	1530003851	S.TRA	2SC5551F-TD-E	T	43.8/24.4
Q4202	1530003851	S.TRA	2SC5551F-TD-E	T	36.3/12.9
Q4203	1590003770	S.TRA	KRA302E-RTK/P	T	21/10.2
Q4204	1590003770	S.TRA	KRA302E-RTK/P	T	20.5/4.7
Q4205	1590003770	S.TRA	KRA302E-RTK/P	B	45.7/24.5
Q4301	1590003770	S.TRA	KRA302E-RTK/P	T	23.5/25.7
Q4302	1530003851	S.TRA	2SC5551F-TD-E	B	6/18.9
Q4303	1590003770	S.TRA	KRA302E-RTK/P	T	22.7/23.6
Q4304	1590003770	S.TRA	KRA302E-RTK/P	T	18.9/8.4
Q4305	1590003680	S.TRA	KRC402 RTK/P	T	16.6/7.3
D4101	1750000581	S.DIO	1SV307(TPH3,F)	T	41.9/30.8
D4102	1750000581	S.DIO	1SV307(TPH3,F)	T	48.8/26.2
D4201	1750000581	S.DIO	1SV307(TPH3,F)	T	37.8/31.7
D4202	1750000581	S.DIO	1SV307(TPH3,F)	T	44.5/15.9
D4203	1750001320	S.DIO	KDS4148U RTK/P	T	21/7.5
D4301	1750000581	S.DIO	1SV307(TPH3,F)	T	35.1/32.1
D4302	1750000581	S.DIO	1SV307(TPH3,F)	T	48.4/7.4
D4303	1750001320	S.DIO	KDS4148U RTK/P	T	22.4/21.7
L4101	6200003221	S.COI	NLV32T-151J	B	47.5/33
L4201	6200003221	S.COI	NLV32T-151J	T	38/28.6
L4202	6140003800	COI	LR-439		
L4203	6200009060	S.COI	LQH32CN101K23L	T	38.1/17.5
L4204	6200009060	S.COI	LQH32CN101K23L	T	25.4/7.5
L4205	6140003810	COI	LR-440		
L4206	6140003810	COI	LR-440		
L4207	6200009060	S.COI	LQH32CN101K23L	T	31.6/7.5
L4208	6140003800	COI	LR-439		
L4209	6200003221	S.COI	NLV32T-151J	B	42.9/23.1
L4210	6200007780	S.COI	LQW2BHNR12J03L	B	42.4/17.5
L4301	6200003221	S.COI	NLV32T-151J	T	19.2/26.5
L4302	6140004430	COI	LR-500		
L4303	6140003900	COI	LR-489		
L4304	6200009060	S.COI	LQH32CN101K23L	T	15.1/24.1
L4305	6200003221	S.COI	NLV32T-151J	T	17.1/12.4
R4101	7030003280	S.RES	ERJ3GEYJ 470 V (47)	B	42.7/32.3
R4102	7030003280	S.RES	ERJ3GEYJ 470 V (47)	B	44.7/32.3
R4201	7030003280	S.RES	ERJ3GEYJ 470 V (47)	T	34.6/27.7
R4202	7030003280	S.RES	ERJ3GEYJ 470 V (47)	T	41.7/17
R4203	7030003280	S.RES	ERJ3GEYJ 470 V (47)	T	27.5/6.1
R4204	7030003440	S.RES	ERJ3GEYJ 102 V (1K)	T	44.5/19.9
R4205	7030003440	S.RES	ERJ3GEYJ 102 V (1K)	T	41.8/13.1
R4206	7030003490	S.RES	ERJ3GEYJ 272 V (2.7K)	T	41.8/18.8
R4207	7030003490	S.RES	ERJ3GEYJ 272 V (2.7K)	T	39.9/15
R4208	7030003280	S.RES	ERJ3GEYJ 470 V (47)	B	41.6/19.7
R4209	7030003220	S.RES	ERJ3GEYJ 150 V (15)	B	37.2/23.6
R4210	7030003220	S.RES	ERJ3GEYJ 150 V (15)	B	28.7/15.2
R4213	7030003280	S.RES	ERJ3GEYJ 470 V (47)	T	40.6/21.4
R4214	7030003280	S.RES	ERJ3GEYJ 470 V (47)	T	33.1/12.4
R4301	7030003280	S.RES	ERJ3GEYJ 470 V (47)	T	21.4/28.4
R4302	7030003510	S.RES	ERJ3GEYJ 392 V (3.9K)	B	13.3/25.7
R4303	7030003440	S.RES	ERJ3GEYJ 102 V (1K)	B	13.3/23.3
R4304	7030007860	S.RES	ERJ3GEYJ 8R2V (8.2)	B	1.6/19.3
R4305	7030003240	S.RES	ERJ3GEYJ 220 V (22)	B	11.9/28.7
R4306	7030003280	S.RES	ERJ3GEYJ 470 V (47)	T	15.4/10.3
R4307	7030003200	S.RES	ERJ3GEYJ 100 V (10)	T	14.3/28.6
R4308	7030003280	S.RES	ERJ3GEYJ 470 V (47)	B	5.2/26.4
C4101	4030011600	S.CER	C1608 JB 1E 104K-T	B	47.3/29.4
C4102	4030019320	S.CER	C1608 X7R 1C 105K-T	T	45.4/29.8
C4103	4030011600	S.CER	C1608 JB 1E 104K-T	T	48.4/30
C4104	4030011600	S.CER	C1608 JB 1E 104K-T	T	49.6/31.3
C4201	4030019320	S.CER	C1608 X7R 1C 105K-T	T	30.2/27.7
C4202	4030011600	S.CER	C1608 JB 1E 104K-T	T	44.1/28.3
C4205	4030017490	S.CER	C1608 JB 1A 105K-T	B	33.9/23.6
C4206	4030017490	S.CER	C1608 JB 1A 105K-T	T	26.7/18.8
C4207	4030017490	S.CER	C1608 JB 1A 105K-T	T	46.9/22.8
C4208	4030017490	S.CER	C1608 JB 1A 105K-T	T	40.6/13.1
C4209	4030019320	S.CER	C1608 X7R 1C 105K-T	B	35/18.9
C4210	4030019320	S.CER	C1608 X7R 1C 105K-T	B	26.5/8.1
C4211	4030019320	S.CER	C1608 X7R 1C 105K-T	B	39/16
C4212	4030019320	S.CER	C1608 X7R 1C 105K-T	B	33.5/8.9
C4213	4030017810	S.CER	C1608 CH 1H 102J-T	T	34.1/7.8
C4215	4030019320	S.CER	C1608 X7R 1C 105K-T	B	44/11.5
C4216	4030011600	S.CER	C1608 JB 1E 104K-T	B	43.7/26.4
C4217	4030007110	S.CER	C1608 CH 1H 680J-T	B	44.2/14.1
C4218	4030007110	S.CER	C1608 CH 1H 680J-T	B	42.5/15.6
C4221	4030009510	S.CER	C1608 CH 1H 010B-T	T	42.6/20.7
C4222	4030009510	S.CER	C1608 CH 1H 010B-T	T	38.1/10.1
C4223	4030007010	S.CER	C1608 CH 1H 100D-T	B	38.5/8
C4224	4030017810	S.CER	C1608 CH 1H 102J-T	T	29.6/18.9
C4225	4030017810	S.CER	C1608 CH 1H 102J-T	T	43.3/18.8
C4226	4030017810	S.CER	C1608 CH 1H 102J-T	T	39.4/13.1
C4301	4030011600	S.CER	C1608 JB 1E 104K-T	T	21.4/25.8
C4302	4030019320	S.CER	C1608 X7R 1C 105K-T	T	17.3/29.3
C4303	4030017810	S.CER	C1608 CH 1H 102J-T	B	10.2/24.2
C4304	4030017810	S.CER	C1608 CH 1H 102J-T	B	10.2/27.2
C4305	4030019320	S.CER	C1608 X7R 1C 105K-T	T	11.3/18.5
C4306	4030017490	S.CER	C1608 JB 1A 105K-T	T	14.5/13.3
C4307	4030017810	S.CER	C1608 CH 1H 102J-T	B	11.1/21.1
C4308	4030011600	S.CER	C1608 JB 1E 104K-T	T	18/10.3
C4309	4030006990	S.CER	C1608 CH 1H 080D-T	T	15.5/27.2
C4310	4550006120	S.TAN	TEESVA 0G 226M8R	T	11.6/25.9
C4311	4550006120	S.TAN	TEESVA 0G 226M8R	T	6.7/19.3
C4312	4030017490	S.CER	C1608 JB 1A 105K-T	T	9.8/27.2
C4313	4030017490	S.CER	C1608 JB 1A 105K-T	T	8.2/21.1

[MCF-M UNIT]

REF NO.	PARTS NO.	DESCRIPTION		M.	H/V LOCATION
FI5001	2030000740	S.MON	FL-425 (HF-734A 64.455M BW6K)	T	20/6
L5001	6200012350	S.COI	C2520C-R62G-A	T	8.9/7.6
L5002	6200012350	S.COI	C2520C-R62G-A	T	8.9/4.4
L5003	6200012350	S.COI	C2520C-R62G-A	T	31.2/7.6
L5004	6200012350	S.COI	C2520C-R62G-A	T	31.2/4.4
C5001	4030006900	S.CER	C1608 JB 1H 103K-T	T	6.2/6
C5002	4030007010	S.CER	C1608 CH 1H 100D-T	T	13.6/6.5
C5003	4030007010	S.CER	C1608 CH 1H 100D-T	T	14.9/6.5
C5004	4030007030	S.CER	C1608 CH 1H 150J-T	T	17.9/2.6
C5006	4030007010	S.CER	C1608 CH 1H 100D-T	T	25/5.5
C5007	4030007010	S.CER	C1608 CH 1H 100D-T	T	26.3/5.5
C5008	4030006900	S.CER	C1608 JB 1H 103K-T	T	33.9/6
EP5001	6910002161	CAS	CASE-BM7H-LF		
EP5002	6910002161	CAS	CASE-BM7H-LF		

[MCF-N UNIT]

REF NO.	PARTS NO.	DESCRIPTION		M.	H/V LOCATION
FI6001	2030000750	S.MON	FL-426 (HF-734A 64.455M BW3K)	T	20/6
L6001	6200010960	S.COI	C2520C-R47G-A (0.47U)	T	8.9/7.6
L6002	6200010960	S.COI	C2520C-R47G-A (0.47U)	T	8.9/4.4
L6003	6200010960	S.COI	C2520C-R47G-A (0.47U)	T	31.2/7.6
L6004	6200010960	S.COI	C2520C-R47G-A (0.47U)	T	31.2/4.4
C6001	4030006900	S.CER	C1608 JB 1H 103K-T	T	6.2/6
C6002	4030009990	S.CER	C1608 CH 1H 200J-T	T	13.6/6.5
C6004	4030007030	S.CER	C1608 CH 1H 150J-T	T	17.9/2.6
C6007	4030009990	S.CER	C1608 CH 1H 200J-T	T	26.3/5.5
C6008	4030006900	S.CER	C1608 JB 1H 103K-T	T	33.9/6
EP6001	6910002161	CAS	CASE-BM7H-LF		
EP6002	6910002161	CAS	CASE-BM7H-LF		

[MCF-W UNIT]

REF NO.	PARTS NO.	DESCRIPTION		M.	H/V LOCATION
FI7001	2030000730	S.MON	FL-424 (HF-734A 64.455M BW15K)	T	20/6
L7001	6200012350	S.COI	C2520C-R62G-A	T	8.9/7.6
L7002	6200012350	S.COI	C2520C-R62G-A	T	8.9/4.4
L7003	6200012350	S.COI	C2520C-R62G-A	T	31.2/7.6
L7004	6200012350	S.COI	C2520C-R62G-A	T	31.2/4.4
C7001	4030006900	S.CER	C1608 JB 1H 103K-T	T	6.2/6
C7002	4030007040	S.CER	C1608 CH 1H 180J-T	T	13.6/6.5
C7005	4030006990	S.CER	8P C1608 CH	T	17.9/2.6
C7007	4030007040	S.CER	C1608 CH 1H 180J-T	T	26.3/5.5
C7008	4030006900	S.CER	C1608 JB 1H 103K-T	T	33.9/6
EP7001	6910002161	CAS	CASE-BM7H-LF		
EP7002	6910002161	CAS	CASE-BM7H-LF		

M.=Mounted side (T: Mounted on the Top side, B: Mounted on the Bottom side)
S.=Surface mount

[PA UNIT]

REF NO.	PARTS NO.	DESCRIPTION		M.	H/V LOCATION
IC1	1180002020	S.REG	BA033FP-E2	T	21.5/71.2
IC2	1180002781	REG	KIA7805API-U/PF		
IC3	1180003150	REG	KIA7808API-U/PF		
IC101	1110006380	S.IC	LM2904PWR	T	53.2/11.7
Q1	1560001620	FET	RD06HVF1-101		
Q2	1560001530	FET	RD15HVF1-101		
Q3	1560001530	FET	RD15HVF1-101		
Q4	1560001640	FET	RD100HHF1C-103		
Q5	1560001640	FET	RD100HHF1C-103		
Q9	1590003680	S.TRA	KRC402 RTK/P	T	75.1/86.5
Q101	1520000651	S.TRA	2SB1201S-TL-E	T	63.4/9.5
Q102	1530002060	S.TRA	2SC4081 T106 R	T	58.2/10.8
D1	1160000060	S.DIO	DAN202U T106	T	28.7/20.7
D2	1160000060	S.DIO	DAN202U T106	T	32.7/55.8
D4	1790000700	DIO	DSA3A1		
D5	1790000700	DIO	DSA3A1		
D7	1160000060	S.DIO	DAN202U T106	T	74.1/82.2
D8	1790000700	DIO	DSA3A1		
D11	1160000060	S.DIO	DAN202U T106	T	84/60.7
D12	1160000060	S.DIO	DAN202U T106	T	74.8/8.9
D101	1730002341	S.ZEN	MAZ8047GML	T	59/14.1
L1	6140003240	COI	LR-361		
L4	6140001180	COI	LR-143		
L6	6140003510	COI	LR-393		
L7	6140000610	COI	LR-83		
L8	6140002030	COI	LR-230 (SK-10M-15Y 120)		
L14	6140003230	S.COI	LR-360	T	10/42.6
L21	6110001730	COI	LA-262		
R1	7030003370	S.RES	ERJ3GEYJ 271 V (270)	T	11.5/34.4
R2	7030003230	S.RES	ERJ3GEYJ 180 V (18)	T	9.6/35.2
R3	7030003370	S.RES	ERJ3GEYJ 271 V (270)	T	11.6/36
R4	7310005390	S.TRI	EVM-3VSX50 BQ3 (472)	T	13/52.3
R5	7030003480	S.RES	ERJ3GEYJ 222 V (2.2K)	T	12.8/48.7
R6	7030003360	S.RES	ERJ3GEYJ 221 V (220)	T	14.2/48.7
R7	7030006210	S.RES	ERJ12YJ4R7U (4.7)	T	16/38.8
R8	7030006270	S.RES	ERJ12YJ221U (220)	T	19.7/31.6
R9	7030003380	S.RES	ERJ3GEYJ 331 V (330)	T	16.6/41.3
R11	7030000220	S.RES	MCR10EZHJ 47 (470)	T	32.7/52.2
R12	7030000220	S.RES	MCR10EZHJ 47 (470)	T	30.5/18
R13	7030003440	S.RES	ERJ3GEYJ 102 V (1K)	T	32.9/58.9
R14	7310005390	S.TRI	EVM-3VSX50 BQ3 (472)	T	38.3/75.6
R15	7030003440	S.RES	ERJ3GEYJ 102 V (1K)	T	27.4/22.7
R16	7310005390	S.TRI	EVM-3VSX50 BQ3 (472)	T	22.5/22.9
R17	7030010480	S.RES	ERJ1TYJ 181U (180)	T	46.8/46.1
R18	7030010480	S.RES	ERJ1TYJ 181U (180)	T	41.3/12.5
R19	7030003480	S.RES	ERJ3GEYJ 222 V (2.2K)	T	34.8/47.3
R20	7030003480	S.RES	ERJ3GEYJ 222 V (2.2K)	T	31.4/15.9
R22	7030010950	S.RES	ERJ1TYJ 100U (10)	T	63/51.2
R23	7030003360	S.RES	ERJ3GEYJ 221 V (220)	T	10.7/46.8
R28	7030011240	S.RES	LRF3W-LF-01-R020F	T	136.9/85.3
R29	7030003440	S.RES	ERJ3GEYJ 102 V (1K)	T	131/83.5
R30	7030011240	S.RES	LRF3W-LF-01-R020F	T	144.3/85.3
R31	7030003440	S.RES	ERJ3GEYJ 102 V (1K)	T	132.9/82.4
R38	7030010570	S.RES	ERJ1TYJ 4R7U (4.7)	T	162.4/54.5
R39	7030010570	S.RES	ERJ1TYJ 4R7U (4.7)	T	162.4/58.2
R40	7030010570	S.RES	ERJ1TYJ 4R7U (4.7)	T	162.4/61.9
R44	7070000681	RES	ERX3SJ 3R9 (3.9)		
R45	7030003860	S.RES	ERJ3GE JPW V	T	6.2/24.7
R61	7030010520	S.RES	ERJ1TYJ 101U (100)	T	77/32.9
R62	7030010410	S.RES	ERJ1TYJ 220U (22)	T	87.2/56.1
R63	7030010410	S.RES	ERJ1TYJ 220U (22)	T	87.2/11
R64	7030003440	S.RES	ERJ3GEYJ 102 V (1K)	T	84.7/63.8
R65	7310005450	S.TRI	EVM-3VSX50 BE3 (222)	T	83.2/69
R66	7030003440	S.RES	ERJ3GEYJ 102 V (1K)	T	74.1/6.1
R67	7310005450	S.TRI	EVM-3VSX50 BE3 (222)	T	76.3/69
R69	7030010470	S.RES	ERJ1TYJ 5R6U (5.6)	T	80.8/50
R70	7030010470	S.RES	ERJ1TYJ 5R6U (5.6)	T	80.8/16
R72	7030003480	S.RES	ERJ3GEYJ 222 V (2.2K)	T	80.7/57.6
R73	7030003480	S.RES	ERJ3GEYJ 222 V (2.2K)	T	80.7/8.2
R74	7030011220	S.RES	ERJ1TY 180U (18)	T	87.6/28.2
R75	7030011220	S.RES	ERJ1TY 180U (18)	T	87.3/24.5
R76	7030011220	S.RES	ERJ1TY 180U (18)	T	87.5/38
R77	7030011220	S.RES	ERJ1TY 180U (18)	T	87.3/41.7
R83	7030010470	S.RES	ERJ1TYJ 5R6U (5.6)	T	80.8/53.7
R84	7030010470	S.RES	ERJ1TYJ 5R6U (5.6)	T	80.8/12.1
R85	7510001551	S.THE	NTCG16 4LH 333JT	T	93.2/6.6
R86	7030003470	S.RES	ERJ3GEYJ 182 V (1.8K)	T	91.7/5.4
R87	7030003860	S.RES	ERJ3GE JPW V	T	44.8/5.4
R88	7030003490	S.RES	ERJ3GEYJ 272 V (2.7K)	T	44.8/6.8
R103	7030003860	S.RES	ERJ3GE JPW V	T	54.5/16.5
R104	7030003860	S.RES	ERJ3GE JPW V	T	51.9/16.5
R105	7030008170	S.RES	ERJ12YJ1R0U (1)	T	68.9/12.6
R108	7030000340	S.RES	MCR10EZHJ 470 (471)	T	59/7.5
R109	7030003560	S.RES	ERJ3GEYJ 103 V (10K)	T	56.3/10.6
R110	7030003600	S.RES	ERJ3GEYJ 223 V (22K)	T	53.9/6.1
R111	7030003600	S.RES	ERJ3GEYJ 223 V (22K)	T	52.4/6.1
R112	7030003560	S.RES	ERJ3GEYJ 103 V (10K)	T	51.1/6.1
C1	4030011600	S.CER	C1608 JB 1E 104K-T	T	14/45
C2	4030006860	S.CER	C1608 JB 1H 102K-T	T	11.4/48.7
C3	4030011600	S.CER	C1608 JB 1E 104K-T	T	10/48.7
C4	4030006860	S.CER	C1608 JB 1H 102K-T	T	16.4/36.3
C5	4030011600	S.CER	C1608 JB 1E 104K-T	T	18.9/27.3
C6	4030006860	S.CER	C1608 JB 1H 102K-T	T	20.1/27.3
C7	4030011340	S.CER	C1608 CH 1H 471J-T	T	14.4/42.1

[PA UNIT]

REF NO.	PARTS NO.	DESCRIPTION		M.	H/V LOCATION
C8	4030011600	S.CER	C1608 JB 1E 104K-T	T	16.4/35.1
C14	4030008920	S.CER	C1608 JB 1H 473K-T	T	30.8/57.4
C15	4030008920	S.CER	C1608 JB 1H 473K-T	T	26.2/21.5
C16	4030012490	S.CER	GRM31M1X2A472JZ01L (GRM42-6 SL)	T	38.6/46.9
C17	4030012490	S.CER	GRM31M1X2A472JZ01L (GRM42-6 SL)	T	33.4/15.8
C19	4010005830	CER	HM74SJ SL 151J 500V		
C20	4030011600	S.CER	C1608 JB 1E 104K-T	T	61/59
C22	4030008920	S.CER	C1608 JB 1H 473K-T	T	82.1/63.8
C23	4030008920	S.CER	C1608 JB 1H 473K-T	T	75.4/6.1
C24	4030007090	S.CER	C1608 CH 1H 470J-T	T	9.6/38.1
C25	4030018530	S.CER	C3216 CH 1H 103J-T	T	32.5/44.9
C26	4030018530	S.CER	C3216 CH 1H 103J-T	T	33.7/24.7
C27	4030011600	S.CER	C1608 JB 1E 104K-T	T	83.4/63.8
C28	4030011600	S.CER	C1608 JB 1E 104K-T	T	76.7/6.1
C30	4030011600	S.CER	C1608 JB 1E 104K-T	T	125.3/68.8
C33	4030006900	S.CER	C1608 JB 1H 103K-T	T	132.9/78.9
C34	4030006900	S.CER	C1608 JB 1H 103K-T	T	131/80
C35	4030006860	S.CER	C1608 JB 1H 102K-T	T	125.3/67
C36	4510004601	ELE	16 ME 1000 HC		
C37	4030011600	S.CER	C1608 JB 1E 104K-T	T	151.3/79.9
C39	4510004601	ELE	16 ME 1000 HC		
C40	4510004601	ELE	16 ME 1000 HC		
C41	4030006860	S.CER	C1608 JB 1H 102K-T	T	14/46.3
C42	4030011600	S.CER	C1608 JB 1E 104K-T	T	74/84.1
C52	4030011740	S.CER	GRM32N2C2H201JV01L (GRM42-2 CH)	T	80.7/32.9
C57	4030018750	S.CER	C3225 CH 2J 682K-T	T	84.4/45.8
C58	4030018750	S.CER	C3225 CH 2J 682K-T	T	84.3/20.3
C62	4030012480	S.CER	GRM31M2C2H121JV01L (GRM42-6 CH)	T	117.8/51.6
C63	4030012480	S.CER	GRM31M2C2H121JV01L (GRM42-6 CH)	T	118/14.2
C64	4030011730	S.CER	GRM31M2C2H101JV01L (GRM42-6 CH)		
C65	4030011740	S.CER	GRM32N2C2H201JV01L (GRM42-2 CH)	T	110.6/33
C66	4030011740	S.CER	GRM32N2C2H201JV01L (GRM42-2 CH)	T	113.6/33
C67	4030011740	S.CER	GRM32N2C2H201JV01L (GRM42-2 CH)	T	116.6/33
C68	4030011740	S.CER	GRM32N2C2H201JV01L (GRM42-2 CH)	T	119.7/33
C71	4030011600	S.CER	C1608 JB 1E 104K-T	T	26/66.7
C72	4030011600	S.CER	C1608 JB 1E 104K-T	T	31.6/76.7
C73	4510009910	S.ELE	16 CE 10 LH	T	30/68.8
C74	4510009910	S.ELE	16 CE 10 LH	T	30/73.6
C75	4030011600	S.CER	C1608 JB 1E 104K-T	T	11.2/83.8
C76	4030011600	S.CER	C1608 JB 1E 104K-T	T	17.9/85.7
C77	4510009920	S.ELE	16 CE 100 LH	T	15.6/80.9
C78	4510009920	S.ELE	16 CE 100 LH	T	23.4/84.5
C79	4030011600	S.CER	C1608 JB 1E 104K-T	T	37.1/81.2
C80	4030011600	S.CER	C1608 JB 1E 104K-T	T	48.7/81.2
C81	4510009910	S.ELE	16 CE 10 LH	T	40.7/81.5
C82	4510009910	S.ELE	16 CE 10 LH	T	45.6/81.5
C89	4030011600	S.CER	C1608 JB 1E 104K-T	T	73.2/86.4
C90	4030011600	S.CER	C1608 JB 1E 104K-T	T	94.7/5.4
C91	4030011600	S.CER	C1608 JB 1E 104K-T	T	47.5/5.4
C101	4510009920	S.ELE	16 CE 100 LH	T	147.7/11.4
C102	4030006900	S.CER	C1608 JB 1H 103K-T	T	68.9/8.2
C103	4030006900	S.CER	C1608 JB 1H 103K-T	T	56.3/7.7
C104	4030011600	S.CER	C1608 JB 1E 104K-T	T	55.1/7.7
C107	4030006900	S.CER	C1608 JB 1H 103K-T	T	149.9/79.9
C108	4030006900	S.CER	C1608 JB 1H 103K-T	T	10.9/12.7
C109	4030006900	S.CER	C1608 JB 1H 103K-T	T	14.7/12.7
C110	4030006900	S.CER	C1608 JB 1H 103K-T	T	19.7/12.7
C111	4030006900	S.CER	C1608 JB 1H 103K-T	T	20.9/12.7
C112	4030006900	S.CER	C1608 JB 1H 103K-T	T	15.9/12.7
C113	4030006900	S.CER	C1608 JB 1H 103K-T	T	12.1/12.7
C114	4030006900	S.CER	C1608 JB 1H 103K-T	T	22.1/12.7
C115	4030006900	S.CER	C1608 JB 1H 103K-T	T	18/12.7
C121	4550007650	S.TAN	F931V105MAABMA	T	90.6/71.5
C131	4030018750	S.CER	C3225 CH 2J 682K-T	T	74.3/45.3
C132	4030018750	S.CER	C3225 CH 2J 682K-T	T	74.2/20.7
C133	4030012620	S.CER	GRM55R2C2H102JV01L (GRM44-1)	T	78.5/43.4
C134	4030012620	S.CER	GRM55R2C2H102JV01L (GRM44-1)	T	78.5/22.6
C135	4030011730	S.CER	GRM31M2C2H101JV01L (GRM42-6 CH)	T	70.3/44.4
C136	4030011730	S.CER	GRM31M2C2H101JV01L (GRM42-6 CH)	T	70.3/21.6
RL1	6330001471	REL	AJS1311F-K2		
CP1	6910009670	S.CHE	HK3-S-T	T	48.5/10
CP2	6910009670	S.CHE	HK3-S-T	T	48.5/8.2
J1	6510007020	CON	TMP-J01X-V6		
J2	6510007020	CON	TMP-J01X-V6		
J3	6510022601	S.CON	30FMN-BMTTR-A-TBT(LF)(SN)	T	25.4/7.7
J10	6510003081	CON	RT01T-1.0B(LF)		
J101	6510018961	S.CON	B2B-PH-SM4-TB(LF)(SN)	T	138.5/10.7
F1	5220000400	HOL	FHA010-01F		
F2	5210000940	FUS	1205		
W14	9016910440	WIR	23/06/050/D21/W05		

M.=Mounted side (T: Mounted on the Top side, B: Mounted on the Bottom side)
S.=Surface mount

[PA UNIT]

REF NO.	PARTS NO.	DESCRIPTION		M.	H/V LOCATION
EP2	6910019200	S.BEA	N2012ZPS121T50	T	28.1/56.7
EP4	6510018330	TER	F4053A		
EP5	6510018330	TER	F4053A		
EP6	6910019200	S.BEA	N2012ZPS121T50	T	65.2/56.6
EP19	6910019200	S.BEA	N2012ZPS121T50	T	60.2/52.8
EP20	6910019200	S.BEA	N2012ZPS121T50	T	60.2/49.5

[FILTER UNIT]

REF NO.	PARTS NO.	DESCRIPTION		M.	H/V LOCATION
Q101	1590003680	S.TRA	KRC402 RTK/P	T	145.4/87.7
Q102	1590003770	S.TRA	KRA302E-RTK/P	T	145.6/85.1
Q151	1590003680	S.TRA	KRC402 RTK/P	T	142.9/87.7
Q152	1590003770	S.TRA	KRA302E-RTK/P	T	143.1/85.1
Q201	1590003680	S.TRA	KRC402 RTK/P	T	140.4/87.7
Q202	1590003770	S.TRA	KRA302E-RTK/P	T	140.6/85.1
Q251	1590003680	S.TRA	KRC402 RTK/P	T	116.8/87.7
Q252	1590003770	S.TRA	KRA302E-RTK/P	T	117/85.1
Q301	1590003680	S.TRA	KRC402 RTK/P	T	114.3/87.7
Q302	1590003770	S.TRA	KRA302E-RTK/P	T	114.4/85.1
Q351	1590003680	S.TRA	KRC402 RTK/P	T	109.3/87.7
Q352	1590003770	S.TRA	KRA302E-RTK/P	T	109.5/85.1
Q401	1590003680	S.TRA	KRC402 RTK/P	T	106.8/87.7
Q402	1590003770	S.TRA	KRA302E-RTK/P	T	107/85.1
D102	1750001320	S.DIO	KDS4148U RTK/P	T	154.9/77.3
D152	1750001320	S.DIO	KDS4148U RTK/P	T	139.4/77.3
D154	1750001320	S.DIO	KDS4148U RTK/P	T	135.6/86.5
D155	1750001320	S.DIO	KDS4148U RTK/P	T	137.4/86.5
D202	1750001320	S.DIO	KDS4148U RTK/P	T	124/77.3
D252	1750001320	S.DIO	KDS4148U RTK/P	T	106.5/78.6
D302	1750001320	S.DIO	KDS4148U RTK/P	T	92.5/84
D352	1750001320	S.DIO	KDS4148U RTK/P	T	61.9/84
D402	1750001320	S.DIO	KDS4148U RTK/P	T	46.6/84
L1	6200002041	S.COI	NLV25T-101J	T	121/84.5
L102	6110003540	COI	LA-548 (LA-215A)		
L103	6110003570	COI	LA-550		
L104	6110003550	COI	LA-547 (LA-214A)		
L152	6110002920	COI	LA-481		
L153	6140004750	COI	LR-535		
L154	6140004750	COI	LR-535		
L202	6140003450	COI	LR-387 (T50-10)		
L203	6140003460	COI	LR-388 (T50-10)		
L204	6140003460	COI	LR-388 (T50-10)		
L252	6140001160	COI	LR-141 (T68-2)		
L253	6140001160	COI	LR-141 (T68-2)		
L254	6140001160	COI	LR-141 (T68-2)		
L302	6110002920	COI	LA-481		
L303	6110002910	COI	LA-480		
L352	6140001240	COI	LR-149 (T68-2)		
L353	6140001130	COI	LR-138 (T68-2)		
L401	6200002041	S.COI	NLV25T-101J	T	38.7/20.9
L402	6140002570	COI	LR-294 (T50-2)		
L403	6140002580	COI	LR-295 (T50-2)		
L501	6140003440	COI	LR-386 (FK-100E-5003H)		
L502	6140003440	COI	LR-386 (FK-100E-5003H)		
R101	7030003360	S.RES	ERJ3GEYJ 221 V (220)	T	158.1/77.3
R102	7030003360	S.RES	ERJ3GEYJ 221 V (220)	T	158.1/79.2
R151	7030003360	S.RES	ERJ3GEYJ 221 V (220)	T	142.5/77.3
R152	7030003360	S.RES	ERJ3GEYJ 221 V (220)	T	142.5/79.1
R201	7030003360	S.RES	ERJ3GEYJ 221 V (220)	T	127.2/77.3
R202	7030003360	S.RES	ERJ3GEYJ 221 V (220)	T	127.2/79.1
R251	7030003360	S.RES	ERJ3GEYJ 221 V (220)	T	110.4/79.4
R252	7030003360	S.RES	ERJ3GEYJ 221 V (220)	T	109.2/79.4
R301	7030003360	S.RES	ERJ3GEYJ 221 V (220)	T	95.6/84
R302	7030003360	S.RES	ERJ3GEYJ 221 V (220)	T	95.6/85.8
R351	7030003360	S.RES	ERJ3GEYJ 221 V (220)	T	65/84
R352	7030003360	S.RES	ERJ3GEYJ 221 V (220)	T	65/85.8
R401	7030003360	S.RES	ERJ3GEYJ 221 V (220)	T	49.7/84
R402	7030003360	S.RES	ERJ3GEYJ 221 V (220)	T	49.7/85.8
C101	4030006900	S.CER	C1608 JB 1H 103K-T	T	150/21
C105	4030011160	S.CER	GRM31M2C2H150JV01L (GRM42-6 CH)	T	161.6/26
C106	4030011120	S.CER	GRM31M2C2H100JV01L (GRM42-6 CH)	T	168.6/34.1
C107	4030011190	S.CER	GRM31M2C2H270JV01L (GRM42-6 CH)	T	155.4/39.7
C108	4030011240	S.CER	GRM31M2C2H470JV01L (GRM42-6 CH)	T	155.4/41.8
C109	4030011160	S.CER	GRM31M2C2H150JV01L (GRM42-6 CH)	T	168.6/44.1
C110	4030011240	S.CER	GRM31M2C2H470JV01L (GRM42-6 CH)	T	155.2/57.6
C111	4030011240	S.CER	GRM31M2C2H470JV01L (GRM42-6 CH)	T	155.2/60.4
C112	4030011100	S.CER	GRM31M2C2H8R0DV01L (GRM42-6 CH)	T	158.8/61.9
C113	4030011240	S.CER	GRM31M2C2H470JV01L (GRM42-6 CH)	T	155.2/63.5
C114	4030006900	S.CER	C1608 JB 1H 103K-T	T	155.2/79.2
C154	4030006900	S.CER	C1608 JB 1H 103K-T	T	137.1/18.1
C158	4030011180	S.CER	GRM31M2C2H220JV01L (GRM42-6 CH)	T	148.8/29.5
C159	4030011730	S.CER	GRM31M2C2H101JV01L (GRM42-6 CH)	T	150.4/36.4
C160	4030011730	S.CER	GRM31M2C2H101JV01L (GRM42-6 CH)	T	150.4/38.5
C162	4030011730	S.CER	GRM31M2C2H101JV01L (GRM42-6 CH)	T	141.4/48.9
C163	4030012480	S.CER	GRM31M2C2H121JV01L (GRM42-6 CH)	T	147.5/48.9
C165	4030012480	S.CER	GRM31M2C2H121JV01L (GRM42-6 CH)	T	147.5/51
C166	4030011510	S.CER	GRM31M2C2H560JV01L (GRM42-6 CH)	T	140.4/63.4
C170	4030014460	S.CER	GRM31M2C2H820JV01L (GRM42-6 CH)	T	146.2/65.6

M.=Mounted side (T: Mounted on the Top side, B: Mounted on the Bottom side)
S.=Surface mount

[FILTER UNIT]

REF NO.	PARTS NO.	DESCRIPTION		M.	H/V LOCATION
C172	4030006900	S.CER	C1608 JB 1H 103K-T	T	139.7/79.1
C201	4030006900	S.CER	C1608 JB 1H 103K-T	T	122.1/18.1
C203	4030011190	S.CER	GRM31M2C2H270JV01L (GRM42-6 CH)	T	126.1/32.1
C204	4030012480	S.CER	GRM31M2C2H121JV01L (GRM42-6 CH)	T	126.1/37.3
C206	4030011050	S.CER	GRM31M3C2H3R0CY21L (GRM42-6 CJ)	T	131.6/48.1
C207	4030011190	S.CER	GRM31M2C2H270JV01L (GRM42-6 CH)	T	131.6/50.2
C209	4030011550	S.CER	GRM31M2C2H680JV01L (GRM42-6 CH)	T	123.3/50.1
C210	4030011550	S.CER	GRM31M2C2H680JV01L (GRM42-6 CH)	T	123.3/48
C211	4030011120	S.CER	GRM31M2C2H100JV01L (GRM42-6 CH)	T	134.9/57.5
C212	4030011210	S.CER	GRM31M2C2H330JV01L (GRM42-6 CH)	T	124/62.9
C213	4030006900	S.CER	C1608 JB 1H 103K-T	T	124.3/79.1
C251	4030006900	S.CER	C1608 JB 1H 103K-T	T	106.7/17.8
C252	4010005880	CER	HM95SJ SL 271J 500V		
C253	4010005880	CER	HM95SJ SL 271J 500V		
C254	4030011730	S.CER	GRM31M2C2H101JV01L (GRM42-6 CH)	T	102.5/36.2
C255	4030011550	S.CER	GRM31M2C2H680JV01L (GRM42-6 CH)	T	104.8/36.2
C256	4010008300	CER	HM11TJ SL 391J 500V		
C257	4010008200	CER	HM11TJ SL 331J 500V		
C260	4030012480	S.CER	GRM31M2C2H121JV01L (GRM42-6 CH)	T	106.5/51.9
C261	4010008300	CER	HM11TJ SL 391J 500V		
C262	4030011230	S.CER	GRM31M2C2H390JV01L (GRM42-6 CH)	T	106.9/69.6
C263	4010008300	CER	HM11TJ SL 391J 500V		
C264	4010005880	CER	HM95SJ SL 271J 500V		
C265	4030006900	S.CER	C1608 JB 1H 103K-T	T	106.8/80.3
C301	4030006900	S.CER	C1608 JB 1H 103K-T	T	91.5/16.1
C302	4030012480	S.CER	GRM31M2C2H121JV01L (GRM42-6 CH)	T	96/20.7
C303	4030011170	S.CER	GRM31M2C2H180JV01L (GRM42-6 CH)	T	94/34.9
C304	4030012480	S.CER	GRM31M2C2H121JV01L (GRM42-6 CH)	T	90.1/45.2
C305	4030012480	S.CER	GRM31M2C2H121JV01L (GRM42-6 CH)	T	90.1/47.7
C306	4030011240	S.CER	GRM31M2C2H470JV01L (GRM42-6 CH)	T	95.4/55.2
C307	4030011730	S.CER	GRM31M2C2H101JV01L (GRM42-6 CH)	T	95.4/72.1
C308	4030006900	S.CER	C1608 JB 1H 103K-T	T	92.8/85.8
C351	4030006900	S.CER	C1608 JB 1H 103K-T	T	60.9/16.1
C352	4010005360	CER	HM11SJ SL 301J 500V		
C353	4010005360	CER	HM11SJ SL 301J 500V		
C354	4010005370	CER	HM11SJ SL 331J 500V		
C355	4010005360	CER	HM11SJ SL 301J 500V		
C356	4010005830	CER	HM74SJ SL 151J 500V		
C357	4010005360	CER	HM11SJ SL 301J 500V		
C358	4010005360	CER	HM11SJ SL 301J 500V		
C360	4030011730	S.CER	GRM31M2C2H101JV01L (GRM42-6 CH)	T	62.8/63.1
C361	4010005360	CER	HM11SJ SL 301J 500V		
C362	4010008300	CER	HM11TJ SL 391J 500V		
C363	4030006900	S.CER	C1608 JB 1H 103K-T	T	62.2/85.8
C401	4030006900	S.CER	C1608 JB 1H 103K-T	T	45.4/16
C402	4010007590	CER	HM15SJ SL 681J 500V		
C403	4010007590	CER	HM15SJ SL 681J 500V		
C404	4010007590	CER	HM15SJ SL 681J 500V		
C405	4010007590	CER	HM15SJ SL 681J 500V		
C406	4010006410	CER	HM13SJ SL 471J 500V		
C407	4010008260	CER	HM74TJ SL 151J 500V		
C408	4010008200	CER	HM11TJ SL 331J 500V		
C409	4010008280	CER	HM95TJ SL 221J 500V		
C410	4010005390	CER	HM15SJ SL 621J 500V		
C411	4010005390	CER	HM15SJ SL 621J 500V		
C412	4010005390	CER	HM15SJ SL 621J 500V		
C413	4010008200	CER	HM11TJ SL 331J 500V		
C415	4030012480	S.CER	GRM31M2C2H121JV01L (GRM42-6 CH)	T	55.5/61.2
C416	4010005390	CER	HM15SJ SL 621J 500V		
C417	4010005390	CER	HM15SJ SL 621J 500V		
C419	4030006900	S.CER	C1608 JB 1H 103K-T	T	46.9/85.8
C501	4030018980	S.CER	C1608 JB 1H 104K-T	T	24.5/85.7
C502	4030018980	S.CER	C1608 JB 1H 104K-T	T	15.5/85.7
C503	4030006880	S.CER	C1608 JB 1H 472K-T	T	26.5/85.7
C504	4030006880	S.CER	C1608 JB 1H 472K-T	T	13.5/85.7
C507	4030018980	S.CER	C1608 JB 1H 104K-T	T	20/84
C508	4030006880	S.CER	C1608 JB 1H 472K-T	T	20/80.5
C513	4030018980	S.CER	C1608 JB 1H 104K-T	T	30/47
C514	4030018980	S.CER	C1608 JB 1H 104K-T	T	10/47
C515	4030006880	S.CER	C1608 JB 1H 472K-T	T	30/44.5
C516	4030006880	S.CER	C1608 JB 1H 472K-T	T	10/44.5
C517	4510004330	ELE	35 ME 10 SWB		
C521	4030006880	S.CER	C1608 JB 1H 472K-T	T	33.1/21.4
C522	4030006880	S.CER	C1608 JB 1H 472K-T	T	6.8/21.4
C523	4030018980	S.CER	C1608 JB 1H 104K-T	T	33.1/19
C524	4030018980	S.CER	C1608 JB 1H 104K-T	T	6.8/19
C527	4030018980	S.CER	C1608 JB 1H 104K-T	T	20/8.3
C528	4510004330	ELE	35 ME 10 SWB		
RL101	6330001721	REL	ATN207-K1		
RL102	6330001721	REL	ATN207-K1		
RL151	6330001721	REL	ATN207-K1		
RL152	6330001721	REL	ATN207-K1		

[FILTER UNIT]

REF NO.	PARTS NO.	DESCRIPTION		M.	H/V LOCATION
RL201	6330001721	REL	ATN207-K1		
RL202	6330001721	REL	ATN207-K1		
RL251	6330001721	REL	ATN207-K1		
RL252	6330001721	REL	ATN207-K1		
RL301	6330001721	REL	ATN207-K1		
RL302	6330001721	REL	ATN207-K1		
RL351	6330001721	REL	ATN207-K1		
RL352	6330001721	REL	ATN207-K1		
RL401	6330001721	REL	ATN207-K1		
RL402	6330001721	REL	ATN207-K1		
J1	6510007020	CON	TMP-J01X-V6		
J2	6510007020	CON	TMP-J01X-V6		
J3	6510022621	S.CON	10FMN-BMTTR-A-TBT(LF)(SN)	T	128.5/86
W9	8900009621	CAB	OPC-961A		
W10	8900009631	CAB	OPC-962A		
EP501	6510018330	TER	F4053A		
EP502	6510018330	TER	F4053A		

M.=Mounted side (T: Mounted on the Top side, B: Mounted on the Bottom side)
S.=Surface mount

[CTRL UNIT]

REF NO.	PARTS NO.	DESCRIPTION		M.	H/V LOCATION
IC1	1110000960	S.IC	NJM4558M-TE1-#FMZB	T	112.5/54.9
IC21	1120002301	S.IC	TC74AC04F(F) S	T	104/68.5
IC22	1120002252	S.IC	TC74ACT32F(F)	T	121.5/68.8
IC23	1120002242	S.IC	TC74AC112F(F)	T	131.7/69
IC51	1110000960	S.IC	NJM4558M-TE1-#FMZB	T	116.6/80.8
IC81	1110002690	S.IC	NJM2903M-TE1-#FMZB	T	44.6/10
IC201	1140015071	S.IC	R5F212A7SNFP(SX-3073B-1)	T	153.9/68.5
IC202	1130011570	S.IC	BR24L32FV-WE2	T	172.3/63.6
IC203	1110005920	S.IC	S-80851CNMC-B9CT2G	T	142.2/76.8
IC204	1180001071	S.IC	TA7805F(TE16L,Q)	T	156.5/35.2
IC251	1130012620	S.IC	SN74AHCT1G86DCKR	T	176.5/86.1
IC261	1130011530	S.IC	CD74HC4094M96	T	146.4/28.4
Q41	1560000871	S.FET	2SK515-T1B-A (X33)	T	104.2/80.2
Q42	1590001330	S.TRA	DTA114EUA T106	T	108.2/86.4
Q101	1590003770	S.TRA	KRA302E-RTK/P	T	14.2/13
Q102	1590003680	S.TRA	KRC402 RTK/P	T	30.4/54.2
Q103	1590003770	S.TRA	KRA302E-RTK/P	T	34.9/53.9
Q104	1590003680	S.TRA	KRC402 RTK/P	T	14.2/10.1
Q105	1530003960	S.TRA	KTC2875-B-RTK/P	T	19.3/46.8
Q106	1590003680	S.TRA	KRC402 RTK/P	T	60.3/91.5
Q107	1590003770	S.TRA	KRA302E-RTK/P	T	62.8/91.2
Q108	1590003770	S.TRA	KRA302E-RTK/P	T	38.7/40.7
Q109	1590003770	S.TRA	KRA302E-RTK/P	T	72.5/16.6
Q110	1590003680	S.TRA	KRC402 RTK/P	T	38.5/43.4
Q111	1590003680	S.TRA	KRC402 RTK/P	T	69.9/16.3
Q112	1590003680	S.TRA	KRC402 RTK/P	T	23.2/61.8
Q131	1520000561	S.TRA	2SB1123 T-TD-E	T	26.7/81.3
Q132	1540000441	S.TRA	2SD1619T-TD-E	T	26.7/68.2
Q133	1590003680	S.TRA	KRC402 RTK/P	T	28.9/76.1
Q202	1590003770	S.TRA	KRA302E-RTK/P	T	167.6/91.3
Q203	1590003680	S.TRA	KRC402 RTK/P	T	170.1/88
Q241	1590003680	S.TRA	KRC402 RTK/P	T	184.2/89.1
Q242	1590003680	S.TRA	KRC402 RTK/P	T	186.7/89.1
Q243	1590003680	S.TRA	KRC402 RTK/P	T	178.9/89.1
Q244	1590003680	S.TRA	KRC402 RTK/P	T	181.4/89.1
Q245	1590003680	S.TRA	KRC402 RTK/P	T	186/79.1
Q246	1590003680	S.TRA	KRC402 RTK/P	T	188.5/79.1
Q247	1590003680	S.TRA	KRC402 RTK/P	T	180.6/79.1
Q248	1590003680	S.TRA	KRC402 RTK/P	T	183.1/79.1
Q249	1590003680	S.TRA	KRC402 RTK/P	T	150/92.5
Q261	1590003680	S.TRA	KRC402 RTK/P	T	163/41.8
Q263	1590003680	S.TRA	KRC402 RTK/P	T	171.1/77.2
Q264	1590003680	S.TRA	KRC402 RTK/P	T	172.2/73.5
D1	1790000491	S.DIO	HSM88ASTR-E	T	96/49
D2	1790000491	S.DIO	HSM88ASTR-E	T	96/60.7
D3	1750000201	S.DIO	1SS319(TE85R,F)	T	120.5/45.7
D21	1790000491	S.DIO	HSM88ASTR-E	T	103.7/62.1
D22	1790000491	S.DIO	HSM88ASTR-E	T	102.6/75
D23	1790000491	S.DIO	HSM88ASTR-E	T	127.9/84.6
D24	1790000491	S.DIO	HSM88ASTR-E	T	128.2/79.5
D41	1790000491	S.DIO	HSM88ASTR-E	T	97.4/82.2
D42	1790000491	S.DIO	HSM88ASTR-E	T	97.4/78.8
D51	1750000121	S.DIO	DWA010-TE-E	T	121.5/86.6
D81	1790000491	S.DIO	HSM88ASTR-E	T	36.1/10.9
D101	1750001320	S.DIO	KDS4148U RTK/P	T	14.2/15.2
D102	1750001320	S.DIO	KDS4148U RTK/P	T	38.2/54.3
D103	1750001320	S.DIO	KDS4148U RTK/P	T	67.9/91
D104	1750000851	S.DIO	MMBV3700LT1G	T	23.7/49
D105	1750000851	S.DIO	MMBV3700LT1G	T	26.7/48.9
D106	1750001320	S.DIO	KDS4148U RTK/P	T	75/16.2
D107	1750001320	S.DIO	KDS4148U RTK/P	T	38.3/38
D131	1710000140	DIO	U05G		
D202	1750001320	S.DIO	KDS4148U RTK/P	T	160.9/28.6
D241	1750000201	S.DIO	1SS319(TE85R,F)	T	181.5/75.2
D242	1750000201	S.DIO	1SS319(TE85R,F)	T	187.5/75.2
D243	1750000201	S.DIO	1SS319(TE85R,F)	T	179.7/85.5
D244	1750000201	S.DIO	1SS319(TE85R,F)	T	185.8/85.5
X201	6050009520	S.XTA	CR-520 SMD-49 19.6608 MHz	T	167/67
L1	6140003270	COI	LR-364 (TR10X5X5 3A6)		
L2	6200005011	S.COI	NLV25T-100J	T	123.8/51.8
L21	6140003270	COI	LR-364 (TR10X5X5 3A6)		
L22	6200005011	S.COI	NLV25T-100J	T	133/47
L41	6140003270	COI	LR-364 (TR10X5X5 3A6)		
L42	6180003300	COI	T6-222J (2.2M)		
L51	6200002041	S.COI	NLV25T-101J	T	126.6/52.9
L81	6140003270	COI	LR-364 (TR10X5X5 3A6)		
L82	6200002041	S.COI	NLV25T-101J	T	56.3/6.6
L83	6180003300	COI	T6-222J (2.2M)		
L102	6110001560	COI	LA-236		
L103	6110001630	COI	LA-246		
L133	6140004740	COI	LR-533		
L134	6140004740	COI	LR-533		
L201	6200009300	S.COI	ELJPA 100KF 10U	T	161.8/57.5
L202	6200002041	S.COI	NLV25T-101J	T	167.2/57.2
L240	6200005131	S.COI	NLC453232T-101K-PF	T	169.8/22.5
L251	6200002041	S.COI	NLV25T-101J	T	173.9/89.4
L261	6200002041	S.COI	NLV25T-101J	T	141.8/38.6
L262	6200002041	S.COI	NLV25T-101J	T	124.9/11.9
L291	6200005011	S.COI	NLV25T-100J	T	165.6/51.8
R1	7030010910	S.RES	ERJ1TYJ 150U (15)	T	95.8/52.7
R2	7030010910	S.RES	ERJ1TYJ 150U (15)	T	95.8/56.8
R3	7030003560	S.RES	ERJ3GEYJ 103 V (10K)	T	104.1/47.1
R4	7030003560	S.RES	ERJ3GEYJ 103 V (10K)	T	100.9/59.9
R5	7030003720	S.RES	ERJ3GEYJ 224 V (220K)	T	106.2/48.9

[CTRL UNIT]

REF NO.	PARTS NO.	DESCRIPTION		M.	H/V LOCATION
R6	7030003720	S.RES	ERJ3GEYJ 224 V (220K)	T	106.9/58.6
R7	7030003670	S.RES	ERJ3GEYJ 823 V (82K)	T	107.8/50.3
R8	7030003670	S.RES	ERJ3GEYJ 823 V (82K)	T	106.9/57.4
R9	7030003720	S.RES	ERJ3GEYJ 224 V (220K)	T	109.1/50.3
R10	7030003720	S.RES	ERJ3GEYJ 224 V (220K)	T	108.8/58.3
R11	7030003790	S.RES	ERJ3GEYJ 824 V (820K)	T	113.1/60.2
R12	7030003800	S.RES	ERJ3GEYJ 105 V (1M)	T	112.5/50.2
R13	7030003440	S.RES	ERJ3GEYJ 102 V (1K)	T	117.1/47.9
R14	7030003440	S.RES	ERJ3GEYJ 102 V (1K)	T	117.2/43.8
R18	7030003320	S.RES	ERJ3GEYJ 101 V (100)	T	100.8/62.3
R19	7030003320	S.RES	ERJ3GEYJ 101 V (100)	T	97.8/71.9
R21	7030010540	S.RES	ERJ1TYJ 330U (33)	T	92.4/69.8
R22	7030003860	S.RES	ERJ3GE JPW V	T	105/74.6
R23	7030003860	S.RES	ERJ3GE JPW V	T	107.4/61.7
R25	7030003800	S.RES	ERJ3GEYJ 105 V (1M)	T	106.3/74.6
R26	7030003800	S.RES	ERJ3GEYJ 105 V (1M)	T	107.4/63
R27	7030003280	S.RES	ERJ3GEYJ 470 V (47)	T	110.2/63
R28	7030003280	S.RES	ERJ3GEYJ 470 V (47)	T	115/73.3
R29	7030003440	S.RES	ERJ3GEYJ 102 V (1K)	T	116.4/68
R30	7030003440	S.RES	ERJ3GEYJ 102 V (1K)	T	116.4/71.8
R31	7030003280	S.RES	ERJ3GEYJ 470 V (47)	T	126.6/71
R32	7030003280	S.RES	ERJ3GEYJ 470 V (47)	T	120.9/62.6
R33	7030003280	S.RES	ERJ3GEYJ 470 V (47)	T	123.7/62.6
R34	7030003440	S.RES	ERJ3GEYJ 102 V (1K)	T	126.6/65.9
R35	7030003440	S.RES	ERJ3GEYJ 102 V (1K)	T	133/62.8
R36	7030003440	S.RES	ERJ3GEYJ 102 V (1K)	T	124/61.3
R37	7030003250	S.RES	ERJ3GEYJ 270 V (27)	T	129.5/75.1
R38	7030003280	S.RES	ERJ3GEYJ 470 V (47)	T	130.8/78.2
R39	7030003480	S.RES	ERJ3GEYJ 222 V (2.2K)	T	128/77.4
R40	7030003500	S.RES	ERJ3GEYJ 332 V (3.3K)	T	127.4/82.5
R41	7030003360	S.RES	ERJ3GEYJ 221 V (220)	T	126.1/81.2
R42	7030010550	S.RES	ERJ1TYJ 820U (82)	T	92.4/81.7
R43	7030003560	S.RES	ERJ3GEYJ 103 V (10K)	T	100.8/78.6
R44	7030003560	S.RES	ERJ3GEYJ 103 V (10K)	T	100.8/82.7
R45	7030003800	S.RES	ERJ3GEYJ 105 V (1M)	T	100.8/79.9
R46	7030003560	S.RES	ERJ3GEYJ 103 V (10K)	T	103.8/82.7
R47	7030003520	S.RES	ERJ3GEYJ 472 V (4.7K)	T	106.9/83.4
R48	7030003440	S.RES	ERJ3GEYJ 102 V (1K)	T	107.5/81.6
R49	7030004710	S.RES	ERJ3GEYJ 475 V (4.7M)	T	105.4/86.4
R51	7030003480	S.RES	ERJ3GEYJ 222 V (2.2K)	T	122.8/83.2
R52	7030003560	S.RES	ERJ3GEYJ 103 V (10K)	T	108.2/83.4
R53	7030003530	S.RES	ERJ3GEYJ 562 V (5.6K)	T	118.8/76.3
R54	7030003580	S.RES	ERJ3GEYJ 153 V (15K)	T	120.1/76.3
R55	7030003680	S.RES	ERJ3GEYJ 104 V (100K)	T	124.2/80.6
R56	7030003540	S.RES	ERJ3GEYJ 682 V (6.8K)	T	112.6/76.3
R57	7030003540	S.RES	ERJ3GEYJ 682 V (6.8K)	T	114/76.3
R58	7030003680	S.RES	ERJ3GEYJ 104 V (100K)	T	110.1/81.6
R61	7030003670	S.RES	ERJ3GEYJ 823 V (82K)	T	117.4/76.3
R62	7030003680	S.RES	ERJ3GEYJ 104 V (100K)	T	115.3/84.5
R63	7030003800	S.RES	ERJ3GEYJ 105 V (1M)	T	121.3/80.6
R64	7030003820	S.RES	ERJ3GEYJ 155 V (1.5M)	T	111.8/83.5
R65	7030003560	S.RES	ERJ3GEYJ 103 V (10K)	T	118.3/85.8
R66	7030003560	S.RES	ERJ3GEYJ 103 V (10K)	T	113.9/85.8
R67	7030003560	S.RES	ERJ3GEYJ 103 V (10K)	T	124.8/87.7
R68	7030003560	S.RES	ERJ3GEYJ 103 V (10K)	T	124.8/89.1
R69	7030003680	S.RES	ERJ3GEYJ 104 V (100K)	T	150.9/58.3
R70	7030003680	S.RES	ERJ3GEYJ 104 V (100K)	T	141/66.1
R71	7030003680	S.RES	ERJ3GEYJ 104 V (100K)	T	148.5/58.3
R72	7030003680	S.RES	ERJ3GEYJ 104 V (100K)	T	141/64.8
R81	7030010910	S.RES	ERJ1TYJ 150U (15)	T	36.1/14.9
R82	7030003650	S.RES	ERJ3GEYJ 563 V (56K)	T	33.6/9.7
R83	7030003710	S.RES	ERJ3GEYJ 184 V (180K)	T	49.6/12.4
R84	7030003610	S.RES	ERJ3GEYJ 273 V (27K)	T	51.8/8.8
R85	7030003660	S.RES	ERJ3GEYJ 683 V (68K)	T	51/12.4
R87	7030003680	S.RES	ERJ3GEYJ 104 V (100K)	T	46.8/6.5
R88	7030003840	S.RES	ERJ3GEYJ 225 V (2.2M)	T	51.8/7.4
R89	7030003860	S.RES	ERJ3GE JPW V	T	49.6/6.4
R90	7030003560	S.RES	ERJ3GEYJ 103 V (10K)	T	51.8/6
R101	7030003480	S.RES	ERJ3GEYJ 222 V (2.2K)	T	16.9/46.6
R102	7030003390	S.RES	ERJ3GEYJ 391 V (390)	T	17.6/44.7
R103	7030003520	S.RES	ERJ3GEYJ 472 V (4.7K)	T	21.6/46.9
R105	7030003390	S.RES	ERJ3GEYJ 391 V (390)	T	22.9/45.4
R106	7030003470	S.RES	ERJ3GEYJ 182 V (1.8K)	T	21/44.7
R107	7030003520	S.RES	ERJ3GEYJ 472 V (4.7K)	T	25.4/45.4
R108	7030003440	S.RES	ERJ3GEYJ 102 V (1K)	T	28.2/45.4
R110	7030003460	S.RES	ERJ3GEYJ 152 V (1.5K)	T	21/43.4
R112	7540000130	ABS	2P-50A-301		
R114	7030003640	S.RES	ERJ3GEYJ 473 V (47K)	T	35.6/56.4
R131	7030003480	S.RES	ERJ3GEYJ 222 V (2.2K)	T	35/83
R132	7030004050	S.RES	ERJ3GEYJ 1R0 V (1)	T	29.6/86.5
R133	7030004050	S.RES	ERJ3GEYJ 1R0 V (1)	T	30.3/59.2
R134	7030004050	S.RES	ERJ3GEYJ 1R0 V (1)	T	29.6/90.4
R135	7030004050	S.RES	ERJ3GEYJ 1R0 V (1)	T	30.3/62.9
R136	7030012240	S.RES	ERJ1TYJ 471U (470)	T	27.3/59.1
R137	7030003640	S.RES	ERJ3GEYJ 473 V (47K)	T	25.9/77.4
R138	7030003560	S.RES	ERJ3GEYJ 103 V (10K)	T	27.4/72
R139	7030003400	S.RES	ERJ3GEYJ 471 V (470)	T	27.4/73.2
R140	7030003340	S.RES	ERJ3GEYJ 151 V (150)	T	25.9/76.1
R151	7410000950	S.ARR	EXB-V8V 102JV	T	139.9/87.9
R152	7410000950	S.ARR	EXB-V8V 102JV	T	142.8/84.7
R153	7410000950	S.ARR	EXB-V8V 102JV	T	142.8/91.1
R154	7410000950	S.ARR	EXB-V8V 102JV	T	139.9/94.3
R207	7030003640	S.RES	ERJ3GEYJ 473 V (47K)	T	142.2/71
R211	7030003860	S.RES	ERJ3GE JPW V	T	142.2/63.6
R213	7030003860	S.RES	ERJ3GE JPW V	T	144.7/58.3
R214	7030003860	S.RES	ERJ3GE JPW V	T	153.7/58.7
R215	7030003860	S.RES	ERJ3GE JPW V	T	154.9/58.7
R216	7030003520	S.RES	ERJ3GEYJ 472 V (4.7K)	T	162.6/61.7
R217	7030003860	S.RES	ERJ3GE JPW V	T	139.9/60.6
R218	7030003680	S.RES	ERJ3GEYJ 104 V (100K)	T	164.3/75.4
R219	7030003530	S.RES	ERJ3GEYJ 562 V (5.6K)	T	139.4/77.5
R220	7030003590	S.RES	ERJ3GEYJ 183 V (18K)	T	145.7/74.9
R221	7030003470	S.RES	ERJ3GEYJ 182 V (1.8K)	T	146/78.6
R222	7030003800	S.RES	ERJ3GEYJ 105 V (1M)	T	163.6/67.1

M.=Mounted side (T: Mounted on the Top side, B: Mounted on the Bottom side)
S.=Surface mount

[CTRL UNIT]

REF NO.	PARTS NO.	DESCRIPTION		M.	H/V LOCATION
R223	7030003600	S.RES	ERJ3GEYJ 223 V (22K)	T	172.5/59
R224	7030003560	S.RES	ERJ3GEYJ 103 V (10K)	T	171.7/57.7
R226	7030003560	S.RES	ERJ3GEYJ 103 V (10K)	T	153.7/79.2
R227	7030003520	S.RES	ERJ3GEYJ 472 V (4.7K)	T	173.5/71.6
R228	7030003560	S.RES	ERJ3GEYJ 103 V (10K)	T	173.1/75.4
R229	7030003860	S.RES	ERJ3GE JPW V	T	163.1/45.9
R230	7030003440	S.RES	ERJ3GEYJ 102 V (1K)	T	156.4/79.4
R231	7030003640	S.RES	ERJ3GEYJ 473 V (47K)	T	142.2/69.8
R232	7030010910	S.RES	ERJ1TYJ 150U (15)	T	162.8/22.5
R241	7030003380	S.RES	ERJ3GEYJ 331 V (330)	T	181.3/73
R242	7030003380	S.RES	ERJ3GEYJ 331 V (330)	T	183.9/73.7
R243	7030003380	S.RES	ERJ3GEYJ 331 V (330)	T	185.1/73.7
R244	7030003380	S.RES	ERJ3GEYJ 331 V (330)	T	188/73
R245	7030003380	S.RES	ERJ3GEYJ 331 V (330)	T	180.3/83.2
R246	7030003380	S.RES	ERJ3GEYJ 331 V (330)	T	182.1/84
R247	7030003380	S.RES	ERJ3GEYJ 331 V (330)	T	183.4/84
R248	7030003380	S.RES	ERJ3GEYJ 331 V (330)	T	188.2/84
R261	7030003680	S.RES	ERJ3GEYJ 104 V (100K)	T	157.7/12.2
R263	7030003360	S.RES	ERJ3GEYJ 221 V (220)	T	147.4/16.6
R264	7030003360	S.RES	ERJ3GEYJ 221 V (220)	T	144.6/16.6
R265	7030003400	S.RES	ERJ3GEYJ 471 V (470)	T	157.2/15.4
R266	7030003200	S.RES	ERJ3GEYJ 100 V (10)	T	134.1/19.8
R267	7030003200	S.RES	ERJ3GEYJ 100 V (10)	T	129.9/19.8
R268	7030003200	S.RES	ERJ3GEYJ 100 V (10)	T	132.7/19.8
R269	7030003200	S.RES	ERJ3GEYJ 100 V (10)	T	128.2/19.8
R270	7030003360	S.RES	ERJ3GEYJ 221 V (220)	T	146/16.6
R271	7030003360	S.RES	ERJ3GEYJ 221 V (220)	T	148.8/16.6
R272	7030003440	S.RES	ERJ3GEYJ 102 V (1K)	T	155.7/16.7
R273	7030003200	S.RES	ERJ3GEYJ 100 V (10)	T	135.5/19.8
R274	7030003200	S.RES	ERJ3GEYJ 100 V (10)	T	136.9/19.8
R275	7030003200	S.RES	ERJ3GEYJ 100 V (10)	T	131.3/19.8
R276	7030003200	S.RES	ERJ3GEYJ 100 V (10)	T	126.8/19.8
R277	7030003440	S.RES	ERJ3GEYJ 102 V (1K)	T	175.2/17.1
R282	7030003560	S.RES	ERJ3GEYJ 103 V (10K)	T	110.2/12.3
R291	7030003440	S.RES	ERJ3GEYJ 102 V (1K)	T	166.1/48.6
R292	7030003440	S.RES	ERJ3GEYJ 102 V (1K)	T	165.2/45.8
R293	7030003360	S.RES	ERJ3GEYJ 221 V (220)	T	106.2/11.4
R298	7030003860	S.RES	ERJ3GE JPW V	T	111/74.4
R507	7030003860	S.RES	ERJ3GE JPW V	T	108.6/52.1
R508	7030003860	S.RES	ERJ3GE JPW V	T	106.9/56.2
C1	4030005040	S.CER	C2012 CH 1H 271J-T	T	90.8/56.9
C2	4010005530	CER	HM60SJ SL 020C 500V		
C3	4010005530	CER	HM60SJ SL 020C 500V		
C5	4610001850	S.TRI	TZB4R200AB10R00 (TZBX4R200BA110)	T	102.2/54.9
C6	4030007110	S.CER	C1608 CH 1H 680J-T	T	100/49.6
C8	4030011540	S.CER	C1608 CH 1H 750J-T	T	99.6/59.9
C9	4030006860	S.CER	C1608 JB 1H 102K-T	T	104.9/48.9
C10	4030006880	S.CER	C1608 JB 1H 472K-T	T	105.1/56.9
C11	4030006900	S.CER	C1608 JB 1H 103K-T	T	116.7/52.1
C12	4030006900	S.CER	C1608 JB 1H 103K-T	T	116.2/58.4
C13	4510008540	S.ELE	EEE1CA100SR	T	119.8/51.6
C14	4510008540	S.ELE	EEE1CA100SR	T	120.6/58.4
C15	4030006900	S.CER	C1608 JB 1H 103K-T	T	120.4/48.1
C16	4030006900	S.CER	C1608 JB 1H 103K-T	T	120.4/43.3
C21	4010005540	CER	HM60SJ SL 030C 500V		
C22	4030007070	S.CER	C1608 CH 1H 330J-T	T	97.8/66.4
C23	4030007070	S.CER	C1608 CH 1H 330J-T	T	95.1/71.9
C24	4030007070	S.CER	C1608 CH 1H 330J-T	T	96.5/66.4
C25	4030006900	S.CER	C1608 JB 1H 103K-T	T	98.2/63
C26	4030007120	S.CER	C1608 CH 1H 820J-T	T	97.1/70.1
C27	4030006900	S.CER	C1608 JB 1H 103K-T	T	100.3/74.8
C28	4030006900	S.CER	C1608 JB 1H 103K-T	T	110.2/67.6
C29	4510008540	S.ELE	EEE1CA100SR	T	113.3/66.7
C30	4030006900	S.CER	C1608 JB 1H 103K-T	T	124.4/74.9
C31	4030006900	S.CER	C1608 JB 1H 103K-T	T	130.2/62.8
C32	4550007710	S.TAN	TEESVB2 1A 476M8R	T	127.6/58.1
C33	4030007170	S.CER	C1608 CH 1H 221J-T	T	127.2/75.5
C34	4030007170	S.CER	C1608 CH 1H 221J-T	T	130.8/81.2
C35	4030006900	S.CER	C1608 JB 1H 103K-T	T	125.6/83.4
C42	4010005520	CER	HM60SJ SL 010C 500V		
C43	4030011570	S.CER	CM105 CH 101G 50AT	T	97.3/84.6
C44	4030016550	S.CER	CM105 CH 151G 50AT	T	96.7/75.1
C47	4030006900	S.CER	C1608 JB 1H 103K-T	T	100.8/84.1
C48	4030006860	S.CER	C1608 JB 1H 102K-T	T	100.8/81.3
C49	4030006900	S.CER	C1608 JB 1H 103K-T	T	105.7/83.4
C50	4030006900	S.CER	C1608 JB 1H 103K-T	T	99.8/77.1
C51	4030006900	S.CER	C1608 JB 1H 103K-T	T	124.2/83.2
C52	4030006900	S.CER	C1608 JB 1H 103K-T	T	109.4/83.5
C53	4030007170	S.CER	C1608 CH 1H 221J-T	T	121.3/83.2
C54	4030007170	S.CER	C1608 CH 1H 221J-T	T	111/85.7
C55	4030006900	S.CER	C1608 JB 1H 103K-T	T	118.3/84.5
C56	4030011340	S.CER	C1608 CH 1H 471J-T	T	124/85.8
C57	4030011340	S.CER	C1608 CH 1H 471J-T	T	113.9/87.2
C59	4030006880	S.CER	C1608 JB 1H 472K-T	T	110.6/83.5
C60	4030006900	S.CER	C1608 JB 1H 103K-T	T	115.4/76.3
C81	4030006860	S.CER	C1608 JB 1H 102K-T	T	32.9/11.6
C83	4030006860	S.CER	C1608 JB 1H 102K-T	T	51.8/10.2
C84	4030006860	S.CER	C1608 JB 1H 102K-T	T	52.4/12.4
C85	4030011600	S.CER	C1608 JB 1E 104K-T	T	53.7/8
C86	4030007130	S.CER	C1608 CH 1H 101J-T	T	39/11.7
C102	4030006900	S.CER	C1608 JB 1H 103K-T	T	13.9/17.7
C103	4030006900	S.CER	C1608 JB 1H 103K-T	T	36.6/54
C105	4030011600	S.CER	C1608 JB 1E 104K-T	T	13.8/69.8
C108	4030007070	S.CER	C1608 CH 1H 330J-T	T	19.4/70.1
C109	4030011540	S.CER	C1608 CH 1H 750J-T	T	13.8/65.4
C110	4030006900	S.CER	C1608 JB 1H 103K-T	T	65.4/91.3
C111	4030007120	S.CER	C1608 CH 1H 820J-T	T	19.4/63.1
C112	4030007030	S.CER	C1608 CH 1H 150J-T	T	14.6/57.1
C114	4030007090	S.CER	C1608 CH 1H 470J-T	T	19.3/57.1
C115	4030011600	S.CER	C1608 JB 1E 104K-T	T	26.6/45.4
C117	4030006900	S.CER	C1608 JB 1H 103K-T	T	38.6/35.9

[CTRL UNIT]

REF NO.	PARTS NO.	DESCRIPTION		M.	H/V LOCATION
C118	4030006900	S.CER	C1608 JB 1H 103K-T	T	76.9/16.5
C135	4030018790	S.CER	C3225 JB 2E 104K-T	T	59.6/84.1
C136	4030018790	S.CER	C3225 JB 2E 104K-T	T	59.2/61.6
C137	4030006860	S.CER	C1608 JB 1H 102K-T	T	32.5/83
C138	4030006860	S.CER	C1608 JB 1H 102K-T	T	35/66.5
C139	4030011600	S.CER	C1608 JB 1E 104K-T	T	33.7/83
C140	4030011600	S.CER	C1608 JB 1E 104K-T	T	33.7/66.5
C141	4030006880	S.CER	C1608 JB 1H 472K-T	T	32.5/66.5
C142	4030018960	S.CER	C3216 JB 1C 106MT-N	T	25.1/86.1
C143	4030018960	S.CER	C3216 JB 1C 106MT-N	T	26.2/64.1
C151	4030006900	S.CER	C1608 JB 1H 103K-T	T	134/89.1
C152	4030006900	S.CER	C1608 JB 1H 103K-T	T	131.2/88.3
C153	4030006900	S.CER	C1608 JB 1H 103K-T	T	134/87.5
C154	4030006900	S.CER	C1608 JB 1H 103K-T	T	131.2/86.7
C155	4030006900	S.CER	C1608 JB 1H 103K-T	T	134/85.9
C156	4030006900	S.CER	C1608 JB 1H 103K-T	T	131.2/85.1
C157	4030006900	S.CER	C1608 JB 1H 103K-T	T	134/84.3
C158	4030006900	S.CER	C1608 JB 1H 103K-T	T	131.2/83.5
C159	4030006900	S.CER	C1608 JB 1H 103K-T	T	131.2/89.9
C160	4030006900	S.CER	C1608 JB 1H 103K-T	T	134/90.7
C161	4030006900	S.CER	C1608 JB 1H 103K-T	T	131.2/91.5
C162	4030006900	S.CER	C1608 JB 1H 103K-T	T	134/92.3
C163	4030006900	S.CER	C1608 JB 1H 103K-T	T	131.2/93.1
C164	4030006900	S.CER	C1608 JB 1H 103K-T	T	134/93.9
C165	4030006900	S.CER	C1608 JB 1H 103K-T	T	131.2/94.7
C201	4030006900	S.CER	C1608 JB 1H 103K-T	T	146.1/58.3
C202	4030006900	S.CER	C1608 JB 1H 103K-T	T	147.3/58.3
C203	4030006900	S.CER	C1608 JB 1H 103K-T	T	149.7/58.3
C204	4030006900	S.CER	C1608 JB 1H 103K-T	T	152.1/58.3
C205	4030011600	S.CER	C1608 JB 1E 104K-T	T	159/57.4
C206	4030006900	S.CER	C1608 JB 1H 103K-T	T	145.7/76.1
C207	4510008870	S.ELE	EEE1AA471UP	T	154.3/43.8
C208	4030011600	S.CER	C1608 JB 1E 104K-T	T	174.4/59.7
C209	4030011600	S.CER	C1608 JB 1E 104K-T	T	164.1/36.6
C210	4030007020	S.CER	C1608 CH 1H 120J-T	T	163.1/69.7
C211	4030007020	S.CER	C1608 CH 1H 120J-T	T	162.4/67.1
C212	4030006900	S.CER	C1608 JB 1H 103K-T	T	167.7/89.5
C213	4510008510	S.ELE	EEE1CA471P	T	169/29.8
C215	4030006900	S.CER	C1608 JB 1H 103K-T	T	150/88.1
C221	4030011600	S.CER	C1608 JB 1E 104K-T	T	161.8/69.7
C222	4030011600	S.CER	C1608 JB 1E 104K-T	T	160.1/30.8
C223	4030011600	S.CER	C1608 JB 1E 104K-T	T	104.6/38
C241	4510008550	S.ELE	EEE1HA010SR	T	186.7/56
C242	4510008550	S.ELE	EEE1HA010SR	T	186.7/51.2
C243	4510008550	S.ELE	EEE1HA010SR	T	186.7/46.4
C244	4510008550	S.ELE	EEE1HA010SR	T	186.7/41.6
C245	4510008550	S.ELE	EEE1HA010SR	T	186.7/36.8
C246	4510008550	S.ELE	EEE1HA010SR	T	186.7/32
C247	4510008550	S.ELE	EEE1HA010SR	T	186.7/27.2
C248	4510008550	S.ELE	EEE1HA010SR	T	186.7/22.4
C251	4030011600	S.CER	C1608 JB 1E 104K-T	T	174.5/86.1
C261	4510008540	S.ELE	EEE1CA100SR	T	147/38.8
C262	4030006900	S.CER	C1608 JB 1H 103K-T	T	147/35.6
C266	4030006900	S.CER	C1608 JB 1H 103K-T	T	122/12.9
C267	4030006900	S.CER	C1608 JB 1H 103K-T	T	126.8/15.8
C268	4030006900	S.CER	C1608 JB 1H 103K-T	T	132.7/15.8
C269	4030006900	S.CER	C1608 JB 1H 103K-T	T	136.9/15.8
C270	4030006900	S.CER	C1608 JB 1H 103K-T	T	129.9/15.8
C271	4030006900	S.CER	C1608 JB 1H 103K-T	T	135.5/15.8
C272	4030006900	S.CER	C1608 JB 1H 103K-T	T	134.1/15.8
C273	4030006900	S.CER	C1608 JB 1H 103K-T	T	131.3/15.8
C274	4030006900	S.CER	C1608 JB 1H 103K-T	T	128.2/15.8
C281	4030006900	S.CER	C1608 JB 1H 103K-T	T	168.4/11.8
C282	4030006900	S.CER	C1608 JB 1H 103K-T	T	142.5/10.4
C283	4030019500	S.CER	GRM21BB31A106KE18 (GRM40 B)	T	168.7/19.3
C284	4030019500	S.CER	GRM21BB31A106KE18 (GRM40 B)	T	172/19.3
RL101	6330000800	REL	G5A-237P DC12V		
RL102	6330001770	REL	SIP-1A-12Y		
RL103	6330001770	REL	SIP-1A-12Y		
RL104	6330001460	REL	FTR-F1CA012V		
RL105	6330001460	REL	FTR-F1CA012V		
CP1	6910009670	S.CHE	HK3-S-T	T	111.6/45.9
J3	6510017150	CON	TMP-S01X-C1		
J101	6510017150	CON	TMP-S01X-C1		
J102	6510017150	CON	TMP-S01X-C1		
J103	6510017150	CON	TMP-S01X-C1		
J151	6510022591	S.CON	22FMN-BMTTR-A-TBT(LF)(SN)	T	111.6/92.7
J241	6510022031	S.CON	B10B-ZR-SM4-TF(LF)(SN)	T	180.2/42.9
J261	6510022621	S.CON	10FMN-BMTTR-A-TBT(LF)(SN)	T	132.3/8.4
J262	6510022581	S.CON	24FMN-BMTTR-A-TBT(LF)(SN)	T	158.2/8.4
J291	6510018971	S.CON	B4B-PH-SM4-TB(LF)(SN)	T	171.8/46.8
W1	7120000490	JUM	ERD25T0		
W2	7120000490	JUM	ERD25T0		
EP131	6910014690	S.BEA	MPZ1608S221A-T	T	31/79.6
EP132	6910014690	S.BEA	MPZ1608S221A-T	T	24.3/54.9
EP263	6910014730	S.BEA	MPZ2012S331A-T	T	159.7/15.7
EP264	6910014730	S.BEA	MPZ2012S331A-T	T	162.5/17.8
EP265	6910014730	S.BEA	MPZ2012S331A-T	T	167.7/16.5
EP267	6910014690	S.BEA	MPZ1608S221A-T	T	142.5/8.4
EP268	6910014730	S.BEA	MPZ2012S331A-T	T	165.7/16
EP269	6910014730	S.BEA	MPZ2012S331A-T	T	106.2/9
EP270	6910014730	S.BEA	MPZ2012S331A-T	T	110.2/10.2

M.=Mounted side (T: Mounted on the Top side, B: Mounted on the Bottom side)
S.=Surface mount

[TUNER UNIT]

REF NO.	PARTS NO.	DESCRIPTION		M.	H/V LOCATION
Q1	1590003680	S.TRA	KRC402 RTK/P	T	124.5/89
Q2	1590003680	S.TRA	KRC402 RTK/P	T	104.5/78.3
Q3	1590003680	S.TRA	KRC402 RTK/P	T	77.6/60.7
Q4	1590003680	S.TRA	KRC402 RTK/P	T	72.1/60.7
Q5	1590003680	S.TRA	KRC402 RTK/P	T	66.6/60.7
Q6	1590003680	S.TRA	KRC402 RTK/P	T	61.1/60.7
Q7	1590003680	S.TRA	KRC402 RTK/P	T	57/60.7
Q8	1590003680	S.TRA	KRC402 RTK/P	T	53.2/60.7
Q9	1590003680	S.TRA	KRC402 RTK/P	T	53/78
Q10	1590003680	S.TRA	KRC402 RTK/P	T	108.9/81
Q11	1590003680	S.TRA	KRC402 RTK/P	T	91/78.2
Q12	1590003680	S.TRA	KRC402 RTK/P	T	114.4/81
Q13	1590003680	S.TRA	KRC402 RTK/P	T	95.5/78.2
Q14	1590003680	S.TRA	KRC402 RTK/P	T	119.4/81
Q15	1590003680	S.TRA	KRC402 RTK/P	T	100/78.2
Q16	1590003680	S.TRA	KRC402 RTK/P	T	49.8/70.2
D1	1750001180	S.DIO	KDS122 RTK/P	T	124.5/85
D2	1750001180	S.DIO	KDS122 RTK/P	T	103/75.7
D3	1750001180	S.DIO	KDS122 RTK/P	T	77.6/56.7
D4	1750001180	S.DIO	KDS122 RTK/P	T	72.1/56.7
D5	1750001180	S.DIO	KDS122 RTK/P	T	66.6/56.7
D6	1750001180	S.DIO	KDS122 RTK/P	T	61.1/56.7
D7	1750001180	S.DIO	KDS122 RTK/P	T	57/56.7
D8	1750001180	S.DIO	KDS122 RTK/P	T	53.2/56.7
D9	1750001180	S.DIO	KDS122 RTK/P	T	49/76.2
D10	1750001180	S.DIO	KDS122 RTK/P	T	108.9/77.1
D11	1750001180	S.DIO	KDS122 RTK/P	T	89.5/75.7
D12	1750001180	S.DIO	KDS122 RTK/P	T	114.4/77.1
D13	1750001180	S.DIO	KDS122 RTK/P	T	94/75.7
D14	1750001180	S.DIO	KDS122 RTK/P	T	119.4/77.1
D15	1750001180	S.DIO	KDS122 RTK/P	T	98.5/75.7
D16	1750001180	S.DIO	KDS122 RTK/P	T	49.8/66.2
L3	6110003600	COI	LA-555		
L4	6110003590	COI	LA-554		
L5	6110003020	COI	LA-489		
L6	6110003030	COI	LA-490		
L7	6110003020	COI	LA-489		
L8	6110003030	COI	LA-490		
L9	6140004520	COI	LR-511		
L10	6140004510	COI	LR-510		
L11	6140002700	COI	LR-307 (T130-2)		
L12	6140002700	COI	LR-307 (T130-2)		
L13	6180003291	COI	BM27-400-6A-LF		
L14	6180003291	COI	BM27-400-6A-LF		
L15	6180003291	COI	BM27-400-6A-LF		
L16	6180003291	COI	BM27-400-6A-LF		
L17	6180003291	COI	BM27-400-6A-LF		
L18	6180003291	COI	BM27-400-6A-LF		
L19	6180003291	COI	BM27-400-6A-LF		
L20	6180003291	COI	BM27-400-6A-LF		
R46	7410000950	S.ARR	EXB-V8V 102JV	T	106.8/88.5
R47	7410000950	S.ARR	EXB-V8V 102JV	T	110.8/88.5
R48	7410000950	S.ARR	EXB-V8V 102JV	T	94.8/88.5
R49	7410000950	S.ARR	EXB-V8V 102JV	T	98.8/88.5
C3	4010005130	CER	DEC1X3J470JC4B (DE0910SL470J)		
C4	4010004790	CER	DEC1X3J680JC4B (DE1210SL680J)		
C11	4030006900	S.CER	C1608 JB 1H 103K-T	T	123.3/82.7
C12	4030006900	S.CER	C1608 JB 1H 103K-T	T	124.6/87
C13	4030006900	S.CER	C1608 JB 1H 103K-T	T	109/84
C17	4030006900	S.CER	C1608 JB 1H 103K-T	T	124.5/93.7
C19	4030006900	S.CER	C1608 JB 1H 103K-T	T	89/91.3
C21	4030006900	S.CER	C1608 JB 1H 103K-T	T	102.1/71.7
C22	4030006900	S.CER	C1608 JB 1H 103K-T	T	120.3/5.4
C31	4030006900	S.CER	C1608 JB 1H 103K-T	T	76.5/54.7
C32	4030006900	S.CER	C1608 JB 1H 103K-T	T	77.8/58.7
C33	4030006900	S.CER	C1608 JB 1H 103K-T	T	100/84
C34	4010008550	CER	DEA1X3F390JC3B (DE0607SL390J)		
C35	4010008550	CER	DEA1X3F390JC3B (DE0607SL390J)		
C36	4010004800	CER	DEC1X3J820JC4B (DE1210SL820J)		
C37	4010004780	CER	DEC1X3J560JC4B (DE1010SL560J)		
C38	4010004830	CER	DEC1X3J151JC4B (DE1510SL151J)		
C39	4010008560	CER	DEA1X3F151JA3B (DE1107SL151J)		
C40	4010008690	CER	DEA1X3F101JA3B		
C41	4010004820	CER	DEC1X3J121JC4B (DE1410SL121J)		
C42	4010004790	CER	DEC1X3J680JC4B (DE1210SL680J)		
C43	4010004790	CER	DEC1X3J680JC4B (DE1210SL680J)		
C44	4620000160	VAR	KV-150-05 150P		
C45	4620000160	VAR	KV-150-05 150P		
C46	4030006900	S.CER	C1608 JB 1H 103K-T	T	71/54.7
C47	4030006900	S.CER	C1608 JB 1H 103K-T	T	72.3/58.7
C48	4030006900	S.CER	C1608 JB 1H 103K-T	T	98.7/84
C51	4030006900	S.CER	C1608 JB 1H 103K-T	T	65.5/54.7
C52	4030006900	S.CER	C1608 JB 1H 103K-T	T	66.8/58.7
C53	4030006900	S.CER	C1608 JB 1H 103K-T	T	97.5/84
C61	4030006900	S.CER	C1608 JB 1H 103K-T	T	60/54.7

[TUNER UNIT]

REF NO.	PARTS NO.	DESCRIPTION		M.	H/V LOCATION
C62	4030006900	S.CER	C1608 JB 1H 103K-T	T	61.3/58.7
C63	4030006900	S.CER	C1608 JB 1H 103K-T	T	96.2/84
C71	4030006900	S.CER	C1608 JB 1H 103K-T	T	55.8/54.7
C72	4030006900	S.CER	C1608 JB 1H 103K-T	T	57.1/58.7
C73	4030006900	S.CER	C1608 JB 1H 103K-T	T	95/84
C81	4030006900	S.CER	C1608 JB 1H 103K-T	T	52/54.7
C82	4030006900	S.CER	C1608 JB 1H 103K-T	T	53.3/58.7
C83	4030006900	S.CER	C1608 JB 1H 103K-T	T	93.7/84
C91	4030006900	S.CER	C1608 JB 1H 103K-T	T	51.2/74.5
C92	4030006900	S.CER	C1608 JB 1H 103K-T	T	51/77.8
C93	4030006900	S.CER	C1608 JB 1H 103K-T	T	91.2/84
C101	4030006900	S.CER	C1608 JB 1H 103K-T	T	107.7/75.2
C102	4030006900	S.CER	C1608 JB 1H 103K-T	T	109/79
C103	4030006900	S.CER	C1608 JB 1H 103K-T	T	110.2/84
C111	4030006900	S.CER	C1608 JB 1H 103K-T	T	88.6/71.7
C112	4030006900	S.CER	C1608 JB 1H 103K-T	T	102.6/5.4
C113	4030006900	S.CER	C1608 JB 1H 103K-T	T	105.2/84
C121	4030006900	S.CER	C1608 JB 1H 103K-T	T	113.2/75.2
C122	4030006900	S.CER	C1608 JB 1H 103K-T	T	114.5/79
C123	4030006900	S.CER	C1608 JB 1H 103K-T	T	111.5/84
C131	4030006900	S.CER	C1608 JB 1H 103K-T	T	93.1/71.7
C132	4030006900	S.CER	C1608 JB 1H 103K-T	T	107.4/5.4
C133	4030006900	S.CER	C1608 JB 1H 103K-T	T	106.5/84
C141	4030006900	S.CER	C1608 JB 1H 103K-T	T	118.2/75.2
C142	4030006900	S.CER	C1608 JB 1H 103K-T	T	119.5/79
C143	4030006900	S.CER	C1608 JB 1H 103K-T	T	112.7/84
C151	4030006900	S.CER	C1608 JB 1H 103K-T	T	97.6/71.7
C152	4030006900	S.CER	C1608 JB 1H 103K-T	T	115.3/5.4
C153	4030006900	S.CER	C1608 JB 1H 103K-T	T	107.7/84
C161	4030006900	S.CER	C1608 JB 1H 103K-T	T	48.7/64.2
C162	4030006900	S.CER	C1608 JB 1H 103K-T	T	50/68.2
C163	4030006900	S.CER	C1608 JB 1H 103K-T	T	92.5/84
RL1	6330001610	REL	NY-12W-K-IE		
RL2	6330001610	REL	NY-12W-K-IE		
RL3	6330001610	REL	NY-12W-K-IE		
RL4	6330001610	REL	NY-12W-K-IE		
RL5	6330001610	REL	NY-12W-K-IE		
RL6	6330001610	REL	NY-12W-K-IE		
RL7	6330001610	REL	NY-12W-K-IE		
RL8	6330001610	REL	NY-12W-K-IE		
RL9	6330001610	REL	NY-12W-K-IE		
RL10	6330001610	REL	NY-12W-K-IE		
RL11	6330001610	REL	NY-12W-K-IE		
RL12	6330001610	REL	NY-12W-K-IE		
RL13	6330001610	REL	NY-12W-K-IE		
RL14	6330001610	REL	NY-12W-K-IE		
RL15	6330001610	REL	NY-12W-K-IE		
RL16	6330001610	REL	NY-12W-K-IE		
J3	6510007020	CON	TMP-J01X-V6		
J4	6510007020	CON	TMP-J01X-V6		
J5	6510022591	S.CON	22FMN-BMTTR-A-TBT(LF)(SN)	T	102.9/93.3
MF1	2710000800	MOT	MP24ZA		
MF2	2710000800	MOT	MP24ZA		
W1	8900018420	CAB	OPC-1889		
EP2	6910014730	S.BEA	MPZ2012S331A-T	T	87.1/91.6
EP4	6910014730	S.BEA	MPZ2012S331A-T	T	122.7/92.1

[FRONT UNIT]

REF NO.	PARTS NO.	DESCRIPTION		M.	H/V LOCATION
W1	8900018460	CAB	OPC-1950 (P1,N10,L60) <TJM>		
W2	8900009231	CAB	OPC-908A (P1,N10,L60) <TJM>		
W3	8900017820	CAB	OPC-852A (P1,N16,L60) <TJM>		
W4	8900009231	CAB	OPC-908A (P1,N10,L60) <TJM>		
W5	8900009231	CAB	OPC-908A (P1,N10,L60) <TJM>		
W6	8900009231	CAB	OPC-908A (P1,N10,L60) <TJM>		
W7	8900018480	CAB	OPC-1952 (P0.5,N30,L65) <TJM>		
W8	8900018480	CAB	OPC-1952 (P0.5,N30,L65) <TJM>		
EP1	6910020500	E.O	RMS20-250-201-1B (-1P/E)		
EP2	6910015650	E.O	S-G2218-3#01 (MOUNT PLATE)		
EP3	6910015650	E.O	S-G2218-3#01 (MOUNT PLATE)		

M.=Mounted side (T: Mounted on the Top side, B: Mounted on the Bottom side)
S.=Surface mount

[DISPLAY UNIT]

REF NO.	PARTS NO.	DESCRIPTION		M.	H/V LOCATION
IC1	1130011510	S.IC	BU2099FV-E2	B	146.1/95.4
IC11	1130011880	S.IC	CD4051BPWR	B	46.3/40.8
IC12	1130011880	S.IC	CD4051BPWR	B	96.3/37.2
IC13	1130011880	S.IC	CD4051BPWR	B	81/39.9
IC51	1130011551	S.IC	RX-4581NB-F	B	105.1/66.7
IC61	1130012620	S.IC	SN74AHCT1G86DCKR	B	109.5/82.4
IC101	1140014421	S.IC	M30622M6P-535GP(SX-3009B-1)	B	131.3/39.6
IC151	1110005731	S.IC	S-80928CNMC-G8Y-G	B	82.9/61.6
IC171	1130013470	S.IC	CD4071BNSR	B	292.9/50.9
IC304	1120003080	S.IC	ADD8505WRUZ-REEL7 <FE>	B	196.5/74
IC305	1120003080	S.IC	ADD8505WRUZ-REEL7 <FE>	B	196.5/66.3
IC406	1180003360	S.REG	R1211N002B-TR-F	B	139.2/78.3
IC431	1110002700	S.IC	NJM2904M-TE1-#FMZB	B	52.6/97.2
IC452	1130014580	S.IC	L5Z30673P00	B	167.4/77.4
IC603	1180003370	S.REG	BD6067GU-E2	B	269.5/70.7
IC604	1180003370	S.REG	BD6067GU-E2	B	249.4/70.7
Q1	1590003770	S.TRA	KRA302E-RTK/P	B	9.7/95.3
Q2	1590003680	S.TRA	KRC402 RTK/P	B	12.7/94.9
Q3	1590003680	S.TRA	KRC402 RTK/P	B	76.3/89.8
Q31	1590003680	S.TRA	KRC402 RTK/P	B	45.5/53.3
Q51	1590003680	S.TRA	KRC402 RTK/P	B	107.1/58
Q52	1510000771	S.TRA	2SA1586-GR(TE85L,F)	B	102.6/58.4
Q61	1520000651	S.TRA	2SB1201S-TL-E	B	101.7/89.2
Q62	1530003900	S.TRA	KTC4075 BL-RTK/P	B	103.9/82.6
Q101	1590003680	S.TRA	KRC402 RTK/P	B	148/62.5
Q102	1590003680	S.TRA	KRC402 RTK/P	B	148/65.1
Q103	1560001260	S.FET	2SK3018 T106	B	13.2/97.4
Q181	1560001260	S.FET	2SK3018 T106	B	120.7/62.4
Q182	1510000771	S.TRA	2SA1586-GR(TE85L,F)	B	118.6/60
Q401	1560001660	S.FET	RUF015N02 TL	B	137.1/82.1
Q403	1590003680	S.TRA	KRC402 RTK/P	B	113.8/72
Q404	1550000160	S.FET	CPH3313-TL-E	B	117.6/71.8
Q405	1590003770	S.TRA	KRA302E-RTK/P	B	120.4/92.5
Q406	1590003680	S.TRA	KRC402 RTK/P	B	123.2/93.9
D31	1750001710	S.DIO	RB751V-40 TE-17	B	37.1/54.7
D32	1750001180	S.DIO	KDS122 RTK/P	B	75/69.5
D33	1750001180	S.DIO	KDS122 RTK/P	B	75/66.9
D51	1750001320	S.DIO	KDS4148U RTK/P	B	101.6/61
D61	1730002591	S.ZEN	MAZ8033GHL	B	101.8/82.7
D101	1750001710	S.DIO	RB751V-40 TE-17	B	134.6/28.6
D401	1750000880	S.DIO	RB551V-30TE-17	B	131.7/76.7
D402	1750001180	S.DIO	KDS122 RTK/P	B	128/82.2
D403	1750001180	S.DIO	KDS122 RTK/P	B	128/79.2
D404	1750001180	S.DIO	KDS122 RTK/P	B	128/91.2
D405	1750001180	S.DIO	KDS122 RTK/P	B	128/88.2
D406	1750001180	S.DIO	KDS122 RTK/P	B	128/85.2
D407	1750001320	S.DIO	KDS4148U RTK/P	B	118.1/94.2
D601	1790001450	S.DIO	RB160L-40 TE-25	B	263.3/80.6
D602	1790001450	S.DIO	RB160L-40 TE-25	B	242.4/80.5
D603	1730002531	S.ZEN	NNCD6.2G-T1-A	B	285.5/8.9
X101	6050011550	S.XTA	CR-747 SMD-49TA 9.8304 MHz	B	110.9/39.6
L51	6200005011	S.COI	NLV25T-100J	B	98.1/56.3
L151	6200005011	S.COI	NLV25T-100J	B	198.5/88.9
L152	6200005011	S.COI	NLV25T-100J	B	199/102.1
L401	6200013500	S.COI	CDRH4D16NP-680MC 68U	B	135.5/86.7
L402	6200001981	S.COI	NLV25T-1R0J	B	123.8/74.1
L602	6200013510	S.COI	CDRH4D16NP-220MC 22U	B	261.5/75.2
L603	6200013510	S.COI	CDRH4D16NP-220MC 22U	B	239.9/75.4
R1	7030003360	S.RES	ERJ3GEYJ 221 V (220)	B	9.9/98
R2	7030003540	S.RES	ERJ3GEYJ 682 V (6.8K)	B	63.8/54.5
R3	7030003540	S.RES	ERJ3GEYJ 682 V (6.8K)	B	63.8/88.7
R4	7030003540	S.RES	ERJ3GEYJ 682 V (6.8K)	B	26.7/77
R5	7030003440	S.RES	ERJ3GEYJ 102 V (1K)	B	65.2/50
R6	7030003440	S.RES	ERJ3GEYJ 102 V (1K)	B	65.2/84.5
R7	7030003440	S.RES	ERJ3GEYJ 102 V (1K)	B	28.9/79.2
R8	7030003440	S.RES	ERJ3GEYJ 102 V (1K)	B	9.5/92.5
R9	7030003440	S.RES	ERJ3GEYJ 102 V (1K)	B	9.5/86.2
R11	7030003460	S.RES	ERJ3GEYJ 152 V (1.5K)	B	10/40.6
R13	7030003440	S.RES	ERJ3GEYJ 102 V (1K)	B	33.2/47.2
R14	7030003440	S.RES	ERJ3GEYJ 102 V (1K)	B	35.7/48.2
R15	7030003440	S.RES	ERJ3GEYJ 102 V (1K)	B	33.2/49.2
R16	7030003440	S.RES	ERJ3GEYJ 102 V (1K)	B	35.7/50.2
R17	7030003440	S.RES	ERJ3GEYJ 102 V (1K)	B	58.7/33.7
R18	7030003440	S.RES	ERJ3GEYJ 102 V (1K)	B	59.9/33.7
R19	7030003440	S.RES	ERJ3GEYJ 102 V (1K)	B	61.1/33.7
R20	7030003440	S.RES	ERJ3GEYJ 102 V (1K)	B	62.3/33.7
R21	7030003860	S.RES	ERJ3GE JPW V	B	9/37.6
R22	7030003860	S.RES	ERJ3GE JPW V	B	11/37.1
R23	7030003540	S.RES	ERJ3GEYJ 682 V (6.8K)	B	100.4/30.4
R24	7030003860	S.RES	ERJ3GE JPW V	B	98.3/43.9
R25	7030003860	S.RES	ERJ3GE JPW V	B	97/43.9
R26	7030003540	S.RES	ERJ3GEYJ 682 V (6.8K)	B	81.3/32
R27	7030003540	S.RES	ERJ3GEYJ 682 V (6.8K)	B	83.8/32
R31	7030003860	S.RES	ERJ3GE JPW V	B	67.7/70
R32	7030003860	S.RES	ERJ3GE JPW V	B	67.7/71.2
R36	7030003860	S.RES	ERJ3GE JPW V	B	42.4/83.1
R37	7030003860	S.RES	ERJ3GE JPW V	B	70.5/71.2
R39	7030003440	S.RES	ERJ3GEYJ 102 V (1K)	B	71/72.6
R40	7030003440	S.RES	ERJ3GEYJ 102 V (1K)	B	71.2/68.2
R41	7030003440	S.RES	ERJ3GEYJ 102 V (1K)	B	71.2/67
R42	7030003560	S.RES	ERJ3GEYJ 103 V (10K)	B	43.2/54.1
R51	7030003860	S.RES	ERJ3GE JPW V	B	109.1/57.8
R52	7030003520	S.RES	ERJ3GEYJ 472 V (4.7K)	B	105.1/58.1
R53	7030003640	S.RES	ERJ3GEYJ 473 V (47K)	B	104.1/61.4

[DISPLAY UNIT]

REF NO.	PARTS NO.	DESCRIPTION		M.	H/V LOCATION
R54	7030003560	S.RES	ERJ3GEYJ 103 V (10K)	B	106.1/61.4
R61	7030003640	S.RES	ERJ3GEYJ 473 V (47K)	B	111.8/82.4
R62	7030003580	S.RES	ERJ3GEYJ 153 V (15K)	B	106.6/81.7
R63	7030003660	S.RES	ERJ3GEYJ 683 V (68K)	B	106.6/84.4
R64	7030003360	S.RES	ERJ3GEYJ 221 V (220)	B	103.3/79.6
R65	7030008240	S.RES	ERJ12Y0R00U	B	94.5/85.8
R71	7030003560	S.RES	ERJ3GEYJ 103 V (10K)	B	288/79.5
R72	7030003560	S.RES	ERJ3GEYJ 103 V (10K)	B	290.5/79.5
R73	7030003560	S.RES	ERJ3GEYJ 103 V (10K)	B	289.2/79.5
R74	7030003560	S.RES	ERJ3GEYJ 103 V (10K)	B	291.7/79.5
R75	7030003440	S.RES	ERJ3GEYJ 102 V (1K)	B	286.7/73.8
R76	7030003440	S.RES	ERJ3GEYJ 102 V (1K)	B	289.2/72.8
R77	7030003440	S.RES	ERJ3GEYJ 102 V (1K)	B	286.7/71.8
R78	7030003440	S.RES	ERJ3GEYJ 102 V (1K)	B	289.2/70.8
R79	7030003440	S.RES	ERJ3GEYJ 102 V (1K)	B	286.7/69.8
R80	7030003440	S.RES	ERJ3GEYJ 102 V (1K)	B	289.2/68.8
R81	7030003440	S.RES	ERJ3GEYJ 102 V (1K)	B	283/37.7
R82	7030003440	S.RES	ERJ3GEYJ 102 V (1K)	B	304.5/66.7
R83	7030003440	S.RES	ERJ3GEYJ 102 V (1K)	B	270.5/100.5
R84	7030003440	S.RES	ERJ3GEYJ 102 V (1K)	B	254.7/100.5
R85	7030003440	S.RES	ERJ3GEYJ 102 V (1K)	B	239/100.5
R86	7030003440	S.RES	ERJ3GEYJ 102 V (1K)	B	226.4/100.2
R87	7030003440	S.RES	ERJ3GEYJ 102 V (1K)	B	145.7/36.7
R88	7030003440	S.RES	ERJ3GEYJ 102 V (1K)	B	142.9/36
R89	7030003440	S.RES	ERJ3GEYJ 102 V (1K)	B	143/34.5
R90	7030003440	S.RES	ERJ3GEYJ 102 V (1K)	B	145.7/35.2
R91	7030003440	S.RES	ERJ3GEYJ 102 V (1K)	B	145.7/38.2
R92	7030003440	S.RES	ERJ3GEYJ 102 V (1K)	B	143/37.5
R93	7030003440	S.RES	ERJ3GEYJ 102 V (1K)	B	145.7/42.2
R94	7030003440	S.RES	ERJ3GEYJ 102 V (1K)	B	143/33
R101	7030004730	S.RES	ERJ3GEYF 222 V (2.2K)	B	130.1/27.6
R102	7030003640	S.RES	ERJ3GEYJ 473 V (47K)	B	132.1/28.2
R104	7030003680	S.RES	ERJ3GEYJ 104 V (100K)	B	123.5/28.7
R105	7030003680	S.RES	ERJ3GEYJ 104 V (100K)	B	122.7/30.8
R106	7030003800	S.RES	ERJ3GEYJ 105 V (1M)	B	114.3/39.5
R107	7030003640	S.RES	ERJ3GEYJ 473 V (47K)	B	129.4/53
R108	7030003640	S.RES	ERJ3GEYJ 473 V (47K)	B	130.6/53
R109	7030003560	S.RES	ERJ3GEYJ 103 V (10K)	B	125.2/53
R110	7030003640	S.RES	ERJ3GEYJ 473 V (47K)	B	134.7/50.4
R111	7030003860	S.RES	ERJ3GE JPW V	B	128/28.3
R113	7030003670	S.RES	ERJ3GEYJ 823 V (82K)	B	274.3/13.6
R115	7030003670	S.RES	ERJ3GEYJ 823 V (82K)	B	273/13.6
R118	7030003640	S.RES	ERJ3GEYJ 473 V (47K)	B	273.8/11.7
R119	7030003640	S.RES	ERJ3GEYJ 473 V (47K)	B	273.7/9.7
R121	7030003440	S.RES	ERJ3GEYJ 102 V (1K)	B	132.5/53.2
R122	7030003440	S.RES	ERJ3GEYJ 102 V (1K)	B	133.2/50.5
R123	7030003440	S.RES	ERJ3GEYJ 102 V (1K)	B	134/53.2
R124	7030003440	S.RES	ERJ3GEYJ 102 V (1K)	B	135.5/53.2
R125	7030003440	S.RES	ERJ3GEYJ 102 V (1K)	B	136.2/50.4
R126	7030003440	S.RES	ERJ3GEYJ 102 V (1K)	B	137/53.2
R127	7030003440	S.RES	ERJ3GEYJ 102 V (1K)	B	137.7/50.4
R128	7030003440	S.RES	ERJ3GEYJ 102 V (1K)	B	138.5/53.2
R129	7030003440	S.RES	ERJ3GEYJ 102 V (1K)	B	145.7/46.7
R130	7030003440	S.RES	ERJ3GEYJ 102 V (1K)	B	142.9/46
R131	7030003440	S.RES	ERJ3GEYJ 102 V (1K)	B	145.7/45.2
R132	7030003440	S.RES	ERJ3GEYJ 102 V (1K)	B	142.9/44.5
R133	7030003440	S.RES	ERJ3GEYJ 102 V (1K)	B	142.9/43
R134	7030003440	S.RES	ERJ3GEYJ 102 V (1K)	B	145.7/43.7
R135	7030003440	S.RES	ERJ3GEYJ 102 V (1K)	B	145.7/33.7
R141	7030003680	S.RES	ERJ3GEYJ 104 V (100K)	B	61/44.6
R142	7030003440	S.RES	ERJ3GEYJ 102 V (1K)	B	58/43.9
R143	7030003440	S.RES	ERJ3GEYJ 102 V (1K)	B	61/45.9
R144	7030003320	S.RES	ERJ3GEYJ 101 V (100)	B	61/47.1
R145	7030003440	S.RES	ERJ3GEYJ 102 V (1K)	B	58/48.7
R146	7030003440	S.RES	ERJ3GEYJ 102 V (1K)	B	58/50
R147	7030003440	S.RES	ERJ3GEYJ 102 V (1K)	B	58/51.2
R148	7030003440	S.RES	ERJ3GEYJ 102 V (1K)	B	58/52.5
R149	7030003440	S.RES	ERJ3GEYJ 102 V (1K)	B	58/53.7
R151	7030003650	S.RES	ERJ3GEYJ 563 V (56K)	B	86.7/62.4
R152	7030003620	S.RES	ERJ3GEYJ 333 V (33K)	B	86.7/59.6
R153	7030003520	S.RES	ERJ3GEYJ 472 V (4.7K)	B	85.4/63.6
R154	7030003680	S.RES	ERJ3GEYJ 104 V (100K)	B	208.2/100.4
R155	7030003680	S.RES	ERJ3GEYJ 104 V (100K)	B	208.2/99.2
R156	7030003440	S.RES	ERJ3GEYJ 102 V (1K)	B	204.4/100
R157	7030003440	S.RES	ERJ3GEYJ 102 V (1K)	B	204.4/101.2
R161	7030003860	S.RES	ERJ3GE JPW V	B	190/91.2
R162	7030003860	S.RES	ERJ3GE JPW V	B	191.2/91.2
R171	7030003800	S.RES	ERJ3GEYJ 105 V (1M)	B	291/45.2
R172	7030003800	S.RES	ERJ3GEYJ 105 V (1M)	B	296/45.2
R173	7030003680	S.RES	ERJ3GEYJ 104 V (100K)	B	291/43.9
R174	7030003680	S.RES	ERJ3GEYJ 104 V (100K)	B	296/43.9
R175	7030003680	S.RES	ERJ3GEYJ 104 V (100K)	B	291/41.2
R176	7030003680	S.RES	ERJ3GEYJ 104 V (100K)	B	296/41.2
R177	7030003720	S.RES	ERJ3GEYJ 224 V (220K)	B	292.9/41.9
R178	7030003720	S.RES	ERJ3GEYJ 224 V (220K)	B	294.1/41.9
R181	7030003680	S.RES	ERJ3GEYJ 104 V (100K)	B	116.5/59.9
R182	7030003520	S.RES	ERJ3GEYJ 472 V (4.7K)	B	121.6/59.9
R183	7030003680	S.RES	ERJ3GEYJ 104 V (100K)	B	120.3/57.8
R184	7030003680	S.RES	ERJ3GEYJ 104 V (100K)	B	15.3/97.3
R302	7030006041	S.RES	ERA3YED 622V (6.2K)	B	207.7/81
R303	7030011990	S.RES	ERJ3GEYJ 431V (430)	B	207.7/79.7
R304	7030003420	S.RES	ERJ3GEYJ 681 V (680)	B	207.7/78.5
R305	7030003300	S.RES	ERJ3GEYJ 680 V (68)	B	207.7/77.2
R306	7030004770	S.RES	ERJ3GEYF 113 V (11K)	B	207.7/76
R307	7030006571	S.RES	ERA3YED 392V (3.9K)	B	207.7/74.7
R308	7030011190	S.RES	ERA3YEB 103V (10K)	B	207.7/73.5
R309	7030003300	S.RES	ERJ3GEYJ 680 V (68)	B	207.7/72.2
R310	7030004770	S.RES	ERJ3GEYF 113 V (11K)	B	207.7/71
R311	7030003350	S.RES	ERJ3GEYJ 181 V (180)	B	207.7/69.7
R312	7030005321	S.RES	ERA3YED 103V (10K)	B	207.7/68.5
R313	7030005361	S.RES	ERA3YED 751V (750)	B	207.7/67.2
R314	7030005200	S.RES	ERJ3GEYJ 752 V (7.5K)	B	207.7/66
R315	7030003410	S.RES	ERJ3GEYJ 561 V (560)	B	207.7/64.7
R316	7030012000	S.RES	ERJ3GEYJ 133V (13K)	B	207.7/63.5

M.=Mounted side (T: Mounted on the Top side, B: Mounted on the Bottom side)
S.=Surface mount

[DISPLAY UNIT]

REF NO.	PARTS NO.	DESCRIPTION	M.	H/V LOCATION
R317	7030012010	S.RES ERJ3GEYJ 112V (1.1K)	B	207.7/62.2
R318	7030011770	S.RES ERA3YED 512V (5.1K)	B	207.7/61
R319	7030012020	S.RES ERJ3GEYJ 911V (910)	B	207.7/59.7
R320	7030003570	S.RES ERJ3GEYJ 123 V (12K)	B	207.7/58.5
R321	7030003530	S.RES ERJ3GEYJ 562 V (5.6K)	B	207.7/57.2
R322	7030003260	S.RES ERJ3GEYJ 330 V (33)	B	176.2/90
R323	7030003260	S.RES ERJ3GEYJ 330 V (33)	B	177.5/90
R324	7030003260	S.RES ERJ3GEYJ 330 V (33)	B	178.7/90
R327	7030003260	S.RES ERJ3GEYJ 330 V (33)	B	182.4/91.5
R328	7030003440	S.RES ERJ3GEYJ 102 V (1K)	B	157.2/86
R330	7410001180	S.ARR EXB-V8V 330JV (33)	B	160.2/90.7
R331	7410001180	S.ARR EXB-V8V 330JV (33)	B	163.9/90.7
R332	7410001180	S.ARR EXB-V8V 330JV (33)	B	167.6/90.3
R333	7410001180	S.ARR EXB-V8V 330JV (33)	B	171.3/90.3
R334	7030003350	S.RES ERJ3GEYJ 181 V (180)	B	203.7/81
R335	7030012030	S.RES ERJ3GEYJ 912V (9.1K)	B	202.4/79.7
R336	7030003420	S.RES ERJ3GEYJ 681 V (680)	B	202.4/78.5
R337	7030003300	S.RES ERJ3GEYJ 680 V (68)	B	202.9/77.2
R338	7030003510	S.RES ERJ3GEYJ 392 V (3.9K)	B	202.9/76
R339	7030004770	S.RES ERJ3GEYF 113 V (11K)	B	202.9/74.7
R340	7030011190	S.RES ERA3YEB 103V (10K)	B	202.4/73.5
R341	7030003300	S.RES ERJ3GEYJ 680 V (68)	B	202.4/72.2
R342	7030003350	S.RES ERJ3GEYJ 181 V (180)	B	202.4/71
R343	7030004770	S.RES ERJ3GEYF 113 V (11K)	B	202.4/69.7
R344	7030003550	S.RES ERJ3GEYJ 822 V (8.2K)	B	202.9/68.5
R345	7030012040	S.RES ERJ3GEYJ 242V (2.4K)	B	202.9/67.2
R346	7030003380	S.RES ERJ3GEYJ 331 V (330)	B	203.7/65.1
R347	7030003550	S.RES ERJ3GEYJ 822 V (8.2K)	B	203.7/63.8
R348	7030006591	S.RES ERA3YED 511V (510)	B	203.7/62.5
R349	7030003580	S.RES ERJ3GEYJ 153 V (15K)	B	203.7/61.2
R350	7030007731	S.RES ERA3YED 241V (240)	B	203.7/59.9
R351	7030006041	S.RES ERA3YED 622V (6.2K)	B	203.7/58.6
R352	7030005361	S.RES ERA3YED 751V (750)	B	203.7/57.3
R353	7030003570	S.RES ERJ3GEYJ 123 V (12K)	B	203.7/56
R354	7030003440	S.RES ERJ3GEYJ 102 V (1K)	B	181.2/82.9
R356	7030003450	S.RES ERJ3GEYJ 122 V (1.2K)	B	200/60
R357	7030003680	S.RES ERJ3GEYJ 104 V (100K)	B	178.5/83.9
R359	7030003640	S.RES ERJ3GEYJ 473 V (47K)	B	200/61.5
R360	7030003440	S.RES ERJ3GEYJ 102 V (1K)	B	183.2/81.4
R361	7030003440	S.RES ERJ3GEYJ 102 V (1K)	B	153/77.7
R364	7030003440	S.RES ERJ3GEYJ 102 V (1K)	B	155.8/79.8
R366	7030003440	S.RES ERJ3GEYJ 102 V (1K)	B	155.8/81.2
R370	7030003320	S.RES ERJ3GEYJ 101 V (100)	B	189.7/75
R371	7030003680	S.RES ERJ3GEYJ 104 V (100K)	B	155.7/75
R372	7030003860	S.RES ERJ3GE JPW V	B	189.7/72.5
R375	7030003860	S.RES ERJ3GE JPW V	B	191.1/68.6
R376	7030003860	S.RES ERJ3GE JPW V	B	195.9/56.8
R377	7030003860	S.RES ERJ3GE JPW V	B	47.9/96.9
R379	7030003320	S.RES ERJ3GEYJ 101 V (100)	B	145.9/78.3
R380	7030003440	S.RES ERJ3GEYJ 102 V (1K)	B	153/73.5
R384	7030003440	S.RES ERJ3GEYJ 102 V (1K)	B	153/70.7
R385	7030003440	S.RES ERJ3GEYJ 102 V (1K)	B	155.7/70
R389	7030003320	S.RES ERJ3GEYJ 101 V (100)	B	183.6/91.5
R391	7030003260	S.RES ERJ3GEYJ 330 V (33)	B	173.3/66.7
R392	7030003260	S.RES ERJ3GEYJ 330 V (33)	B	174.5/66.7
R393	7030003260	S.RES ERJ3GEYJ 330 V (33)	B	185.5/61.5
R394	7030003260	S.RES ERJ3GEYJ 330 V (33)	B	186.2/58.7
R395	7030003260	S.RES ERJ3GEYJ 330 V (33)	B	186.9/61.5
R396	7030003260	S.RES ERJ3GEYJ 330 V (33)	B	187.6/58.7
R397	7030003260	S.RES ERJ3GEYJ 330 V (33)	B	188.3/61.5
R398	7030003260	S.RES ERJ3GEYJ 330 V (33)	B	174.8/58.7
R399	7030003260	S.RES ERJ3GEYJ 330 V (33)	B	175.5/61.5
R400	7030003260	S.RES ERJ3GEYJ 330 V (33)	B	176.9/61.5
R401	7030003260	S.RES ERJ3GEYJ 330 V (33)	B	176.2/58.7
R402	7030003260	S.RES ERJ3GEYJ 330 V (33)	B	177.6/58.7
R403	7030003320	S.RES ERJ3GEYJ 101 V (100)	B	178.3/61.5
R404	7030003320	S.RES ERJ3GEYJ 101 V (100)	B	114.4/69.2
R405	7030003320	S.RES ERJ3GEYJ 101 V (100)	B	126.4/94.5
R407	7410001180	S.ARR EXB-V8V 330JV (33)	B	160.1/64.2
R408	7410001180	S.ARR EXB-V8V 330JV (33)	B	163.9/64.2
R409	7410001180	S.ARR EXB-V8V 330JV (33)	B	167.6/64.2
R410	7410001180	S.ARR EXB-V8V 330JV (33)	B	171.3/64.2
R411	7030003460	S.RES ERJ3GEYJ 152 V (1.5K)	B	126.5/72.2
R412	7030003860	S.RES ERJ3GE JPW V	B	122.5/78.5
R413	7030003610	S.RES ERJ3GEYJ 273 V (27K)	B	120.5/79.2
R414	7030003800	S.RES ERJ3GEYJ 105 V (1M)	B	117.6/75.6
R415	7030003860	S.RES ERJ3GE JPW V	B	117.8/91.3
R416	7030003680	S.RES ERJ3GEYJ 104 V (100K)	B	114.5/74.3
R417	7030003860	S.RES ERJ3GE JPW V	B	117.6/68.7
R418	7030003610	S.RES ERJ3GEYJ 273 V (27K)	B	117.8/92.5
R419	7030003560	S.RES ERJ3GEYJ 103 V (10K)	B	142/76.5
R431	7030003560	S.RES ERJ3GEYJ 103 V (10K)	B	48.5/101.8
R432	7030003520	S.RES ERJ3GEYJ 472 V (4.7K)	B	51.3/101.8
R433	7030003640	S.RES ERJ3GEYJ 473 V (47K)	B	54/101.8
R488	7030005200	S.RES ERJ3GEYJ 752 V (7.5K)	B	71.8/77.1
R490	7030003660	S.RES ERJ3GEYJ 683 V (68K)	B	74.4/77.1
R500	7030003400	S.RES ERJ3GEYJ 471 V (470)	B	200/58.7
R601	7030003640	S.RES ERJ3GEYJ 473 V (47K)	B	276.7/73.4
R602	7030003610	S.RES ERJ3GEYJ 273 V (27K)	B	275.2/73.4
R603	7030003650	S.RES ERJ3GEYJ 563 V (56K)	B	276.6/71
R604	7030003640	S.RES ERJ3GEYJ 473 V (47K)	B	256.2/73.9
R605	7030003610	S.RES ERJ3GEYJ 273 V (27K)	B	254.6/73.9
R606	7030003650	S.RES ERJ3GEYJ 563 V (56K)	B	255.3/71.9
R611	7030003520	S.RES ERJ3GEYJ 472 V (4.7K)	B	277.5/75.7
R614	7030003520	S.RES ERJ3GEYJ 472 V (4.7K)	B	257/76
R619	7030004040	S.RES ERJ3GEYJ 4R7 V (4.7)	B	253.7/70.7
R621	7030004040	S.RES ERJ3GEYJ 4R7 V (4.7)	B	253.7/69.5
R623	7030004040	S.RES ERJ3GEYJ 4R7 V (4.7)	B	273.7/70.7
R626	7030004040	S.RES ERJ3GEYJ 4R7 V (4.7)	B	273.7/69
R631	7030003440	S.RES ERJ3GEYJ 102 V (1K)	B	247/59
R1001	7030003480	S.RES ERJ3GEYJ 222 V (2.2K)	B	226.4/95.5
R1002	7030003520	S.RES ERJ3GEYJ 472 V (4.7K)	B	226.4/83.7
R1003	7030003580	S.RES ERJ3GEYJ 153 V (15K)	B	226.4/72
R1004	7030003540	S.RES ERJ3GEYJ 682 V (6.8K)	B	225/95.5

[DISPLAY UNIT]

REF NO.	PARTS NO.	DESCRIPTION	M.	H/V LOCATION
R1005	7030003540	S.RES ERJ3GEYJ 682 V (6.8K)	B	242.7/99
R1006	7030003480	S.RES ERJ3GEYJ 222 V (2.2K)	B	240.2/99
R1007	7030003520	S.RES ERJ3GEYJ 472 V (4.7K)	B	240.2/91.2
R1008	7030003580	S.RES ERJ3GEYJ 153 V (15K)	B	241.8/85.1
R1009	7030003540	S.RES ERJ3GEYJ 682 V (6.8K)	B	258.5/99
R1010	7030003480	S.RES ERJ3GEYJ 222 V (2.2K)	B	256/99
R1011	7030003520	S.RES ERJ3GEYJ 472 V (4.7K)	B	256/91.2
R1012	7030003580	S.RES ERJ3GEYJ 153 V (15K)	B	256/83.2
R1013	7030003540	S.RES ERJ3GEYJ 682 V (6.8K)	B	274.5/99
R1014	7030003480	S.RES ERJ3GEYJ 222 V (2.2K)	B	272/99
R1015	7030003520	S.RES ERJ3GEYJ 472 V (4.7K)	B	272/91.2
R1016	7030003580	S.RES ERJ3GEYJ 153 V (15K)	B	273.8/85.6
R1017	7030003540	S.RES ERJ3GEYJ 682 V (6.8K)	B	284.3/37.7
R1018	7030003540	S.RES ERJ3GEYJ 682 V (6.8K)	B	303.7/69.4
R1019	7030003480	S.RES ERJ3GEYJ 222 V (2.2K)	B	305.2/72
R1020	7030003480	S.RES ERJ3GEYJ 222 V (2.2K)	B	315/37
R1021	7030003450	S.RES ERJ3GEYJ 122 V (1.2K)	B	90.2/104
R1022	7030003390	S.RES ERJ3GEYJ 391 V (390)	B	303.4/75
R1023	7030003420	S.RES ERJ3GEYJ 681 V (680)	B	114.3/104.2
R1024	7030003520	S.RES ERJ3GEYJ 472 V (4.7K)	B	316.7/72
R1025	7030003520	S.RES ERJ3GEYJ 472 V (4.7K)	B	300.2/35.7
R1026	7030003390	S.RES ERJ3GEYJ 391 V (390)	B	306.4/75
R1027	7030003430	S.RES ERJ3GEYJ 821 V (820)	B	149.4/104
R1028	7030003580	S.RES ERJ3GEYJ 153 V (15K)	B	300.2/34.5
R1029	7030003390	S.RES ERJ3GEYJ 391 V (390)	B	319.5/75
R1030	7030003420	S.RES ERJ3GEYJ 681 V (680)	B	202.3/103.3
R1100	7030003400	S.RES ERJ3GEYJ 471 V (470)	B	10/99.5
R1101	7030003520	S.RES ERJ3GEYJ 472 V (4.7K)	B	44/46.7
R1102	7030003480	S.RES ERJ3GEYJ 222 V (2.2K)	B	28.1/77
R1103	7030003580	S.RES ERJ3GEYJ 153 V (15K)	B	54/77.3
R1104	7030003450	S.RES ERJ3GEYJ 122 V (1.2K)	B	23.7/87.5
R1105	7030003400	S.RES ERJ3GEYJ 471 V (470)	B	23.7/88.8
R1106	7030003390	S.RES ERJ3GEYJ 391 V (390)	B	40.5/50.5
R1107	7030003400	S.RES ERJ3GEYJ 471 V (470)	B	44.5/94.2
R1108	7030003390	S.RES ERJ3GEYJ 391 V (390)	B	48.2/49.3
R1109	7030003480	S.RES ERJ3GEYJ 222 V (2.2K)	B	63.8/84.5
R1110	7030003520	S.RES ERJ3GEYJ 472 V (4.7K)	B	63.8/75.9
R1111	7030003580	S.RES ERJ3GEYJ 153 V (15K)	B	63.8/67.2
R1112	7030003480	S.RES ERJ3GEYJ 222 V (2.2K)	B	63.8/50
R1113	7030003520	S.RES ERJ3GEYJ 472 V (4.7K)	B	63.8/41.5
C1	4030011600	S.CER C1608 JB 1E 104K-T	B	148.9/91.2
C11	4030011600	S.CER C1608 JB 1E 104K-T	B	24.3/43.1
C12	4030011600	S.CER C1608 JB 1E 104K-T	B	71/28.7
C13	4030011600	S.CER C1608 JB 1E 104K-T	B	39.3/37.9
C14	4030011600	S.CER C1608 JB 1E 104K-T	B	39.3/39.2
C15	4030011600	S.CER C1608 JB 1E 104K-T	B	39.3/40.4
C16	4030011600	S.CER C1608 JB 1E 104K-T	B	39.3/41.7
C17	4030011600	S.CER C1608 JB 1E 104K-T	B	100.5/40.1
C18	4030011600	S.CER C1608 JB 1E 104K-T	B	84.1/46.5
C19	4030011600	S.CER C1608 JB 1E 104K-T	B	49.2/37.3
C20	4030011600	S.CER C1608 JB 1E 104K-T	B	53.4/37.5
C22	4030011600	S.CER C1608 JB 1E 104K-T	B	53.4/38.7
C24	4030011600	S.CER C1608 JB 1E 104K-T	B	53.4/39.9
C25	4030011600	S.CER C1608 JB 1E 104K-T	B	95.4/30.4
C26	4030011600	S.CER C1608 JB 1E 104K-T	B	53.4/41.1
C27	4030011600	S.CER C1608 JB 1E 104K-T	B	97.8/30.4
C28	4030011600	S.CER C1608 JB 1E 104K-T	B	99/30.4
C29	4030011600	S.CER C1608 JB 1E 104K-T	B	94.5/43.9
C30	4030011600	S.CER C1608 JB 1E 104K-T	B	95.8/43.9
C31	4030011600	S.CER C1608 JB 1E 104K-T	B	29.5/62.8
C32	4030011600	S.CER C1608 JB 1E 104K-T	B	82.6/32
C33	4030011600	S.CER C1608 JB 1E 104K-T	B	85.1/32
C34	4030011600	S.CER C1608 JB 1E 104K-T	B	82.5/46.5
C35	4030011600	S.CER C1608 JB 1E 104K-T	B	81.3/46.5
C36	4030011600	S.CER C1608 JB 1E 104K-T	B	80/46.5
C37	4030011600	S.CER C1608 JB 1E 104K-T	B	78.8/46.5
C38	4030006880	S.CER C1608 JB 1H 472K-T	B	57.9/57.7
C51	4030019500	S.CER GRM21BB31A106KE18 (GRM40 B)	B	101.6/62.7
C52	4030011600	S.CER C1608 JB 1E 104K-T	B	100.2/64.3
C61	4030011600	S.CER C1608 JB 1E 104K-T	B	109.4/84.4
C62	4030011600	S.CER C1608 JB 1E 104K-T	B	106.6/80.2
C71	4030011600	S.CER C1608 JB 1E 104K-T	B	225/92.5
C72	4030011600	S.CER C1608 JB 1E 104K-T	B	301/67.5
C73	4030006900	S.CER C1608 JB 1H 103K-T	B	291.8/68
C74	4030006900	S.CER C1608 JB 1H 103K-T	B	300.3/69.8
C101	4030007020	S.CER C1608 CH 1H 120J-T	B	115.7/38.1
C102	4030007020	S.CER C1608 CH 1H 120J-T	B	115.7/41.2
C103	4030006900	S.CER C1608 JB 1H 103K-T	B	130.1/29
C104	4030011600	S.CER C1608 JB 1E 104K-T	B	121.3/40.5
C105	4030011600	S.CER C1608 JB 1E 104K-T	B	140.4/52.7
C106	4030011600	S.CER C1608 JB 1E 104K-T	B	141.9/40.8
C107	4030011600	S.CER C1608 JB 1E 104K-T	B	126.6/29.4
C111	4030011600	S.CER C1608 JB 1E 104K-T	B	272.5/7
C141	4030011600	S.CER C1608 JB 1E 104K-T	B	58.4/55.1
C151	4030011600	S.CER C1608 JB 1E 104K-T	B	85.4/60.9
C152	4030008880	S.CER C1608 JB 1H 223K-T	B	80.4/61.9
C153	4030011600	S.CER C1608 JB 1E 104K-T	B	199.9/99.8
C154	4030019500	S.CER GRM21BB31A106KE18 (GRM40 B)	B	194.5/86.5
C155	4030011600	S.CER C1608 JB 1E 104K-T	B	196.6/88.3
C156	4550007710	S.TAN TEESVB2 1A 476M8R	B	195.2/81.7
C157	4030011600	S.CER C1608 JB 1E 104K-T	B	198.6/85.3
C158	4030011600	S.CER C1608 JB 1E 104K-T	B	194.7/88.3
C159	4030006860	S.CER C1608 JB 1H 102K-T	B	198.6/84
C160	4030006860	S.CER C1608 JB 1H 102K-T	B	202.5/91.5
C161	4550007710	S.TAN TEESVB2 1A 476M8R	B	204.1/87.9
C162	4030011600	S.CER C1608 JB 1E 104K-T	B	202.5/90.2
C171	4030011600	S.CER C1608 JB 1E 104K-T	B	286.7/48
C172	4030006860	S.CER C1608 JB 1H 102K-T	B	296/42.7
C173	4030006860	S.CER C1608 JB 1H 102K-T	B	291/42.7
C174	4030011600	S.CER C1608 JB 1E 104K-T	B	301.9/27.1

M.=Mounted side (T: Mounted on the Top side, B: Mounted on the Bottom side)
S.=Surface mount

[DISPLAY UNIT]

REF NO.	PARTS NO.	DESCRIPTION	M.	H/V LOCATION
C301	4030011600	S.CER C1608 JB 1E 104K-T	B	206.2/82.2
C305	4030011600	S.CER C1608 JB 1E 104K-T	B	203.7/54.7
C308	4030011600	S.CER C1608 JB 1E 104K-T	B	164.9/87.5
C309	4030011600	S.CER C1608 JB 1E 104K-T	B	174.1/87.2
C310	4030011600	S.CER C1608 JB 1E 104K-T	B	177/83.2
C311	4030011600	S.CER C1608 JB 1E 104K-T	B	155.8/84.1
C312	4030017490	S.CER C1608 JB 1A 105K-T	B	190.6/65.7
C313	4030017490	S.CER C1608 JB 1A 105K-T	B	194.3/78.2
C314	4030011600	S.CER C1608 JB 1E 104K-T	B	177.7/77.4
C315	4030017490	S.CER C1608 JB 1A 105K-T	B	155.7/76.4
C316	4030019500	S.CER GRM21BB31A106KE18 (GRM40 B)	B	196.7/60.5
C317	4030011600	S.CER C1608 JB 1E 104K-T	B	153/76.3
C318	4030011600	S.CER C1608 JB 1E 104K-T	B	177.6/73
C320	4030011600	S.CER C1608 JB 1E 104K-T	B	164.9/67.2
C321	4030011600	S.CER C1608 JB 1E 104K-T	B	168.9/67.2
C401	4030019090	S.CER C2012 JB 1C 225M-T	B	192/60.7
C402	4030011600	S.CER C1608 JB 1E 104K-T	B	191.6/58
C403	4030006860	S.CER C1608 JB 1H 102K-T	B	191.6/59.2
C405	4030018980	S.CER C1608 JB 1H 104K-T	B	194.4/59.2
C406	4030006860	S.CER C1608 JB 1H 102K-T	B	194.4/58
C411	4030006860	S.CER C1608 JB 1H 102K-T	B	162.7/57.2
C412	4030011600	S.CER C1608 JB 1E 104K-T	B	183.7/58
C413	4030006860	S.CER C1608 JB 1H 102K-T	B	183.7/59.2
C414	4030011600	S.CER C1608 JB 1E 104K-T	B	162.7/58.4
C418	4030011600	S.CER C1608 JB 1E 104K-T	B	143.1/78.5
C419	4030011810	S.CER C1608 JB 1A 224K-T	B	144.5/78.5
C420	4030017490	S.CER C1608 JB 1A 105K-T	B	183.7/60.4
C422	4030009580	S.CER C1608 JB 1H 681K-T	B	140.1/74.9
C423	4030019090	S.CER C2012 JB 1C 225M-T	B	135.3/77.3
C424	4030019090	S.CER C2012 JB 1C 225M-T	B	133.9/80.6
C425	4030011600	S.CER C1608 JB 1E 104K-T	B	131/91.2
C426	4030011600	S.CER C1608 JB 1E 104K-T	B	131/88.2
C427	4030011600	S.CER C1608 JB 1E 104K-T	B	131/85.2
C428	4030011600	S.CER C1608 JB 1E 104K-T	B	131/82.2
C429	4030011600	S.CER C1608 JB 1E 104K-T	B	131/79.2
C430	4030019500	S.CER GRM21BB31A106KE18 (GRM40 B)	B	128.4/72
C431	4030011600	S.CER C1608 JB 1E 104K-T	B	125.8/82.2
C432	4030011600	S.CER C1608 JB 1E 104K-T	B	125.8/79.2
C433	4030011600	S.CER C1608 JB 1E 104K-T	B	125.8/91.2
C434	4030011600	S.CER C1608 JB 1E 104K-T	B	125.8/88.2
C435	4030011600	S.CER C1608 JB 1E 104K-T	B	125.8/85.2
C436	4030011600	S.CER C1608 JB 1E 104K-T	B	124.5/79.2
C437	4030018980	S.CER C1608 JB 1H 104K-T	B	124.5/91.2
C438	4030019500	S.CER GRM21BB31A106KE18 (GRM40 B)	B	120.8/72
C439	4030011600	S.CER C1608 JB 1E 104K-T	B	117.6/74.3
C440	4030011600	S.CER C1608 JB 1E 104K-T	B	49.1/96.9
C606	4030019500	S.CER GRM21BB31A106KE18 (GRM40 B)	B	278.2/73.4
C607	4030019500	S.CER GRM21BB31A106KE18 (GRM40 B)	B	257.7/73.8
C608	4030019500	S.CER GRM21BB31A106KE18 (GRM40 B)	B	265.4/70.8
C609	4030019500	S.CER GRM21BB31A106KE18 (GRM40 B)	B	245.5/70.7
C613	4030016990	S.CER GRM32RR11H105KA01L (GRM42-2 R)	B	270.2/76.2
C614	4030018980	S.CER C1608 JB 1H 104K-T	B	269.3/73.3
C616	4030016990	S.CER GRM32RR11H105KA01L (GRM42-2 R)	B	250.1/75.2
C617	4030018980	S.CER C1608 JB 1H 104K-T	B	249.2/73.1
C653	4030011600	S.CER C1608 JB 1E 104K-T	B	267/70
C654	4030011600	S.CER C1608 JB 1E 104K-T	B	247.2/70
C1001	4030011600	S.CER C1608 JB 1E 104K-T	B	273.2/99
C1002	4030011600	S.CER C1608 JB 1E 104K-T	B	257.2/99
C1003	4030011600	S.CER C1608 JB 1E 104K-T	B	241.5/99
C1004	4030011600	S.CER C1608 JB 1E 104K-T	B	223.7/95.5
C1006	4030011600	S.CER C1608 JB 1E 104K-T	B	305.2/70.7
C1007	4030011600	S.CER C1608 JB 1E 104K-T	B	281.7/37.7
C1101	4030011600	S.CER C1608 JB 1E 104K-T	B	65.2/88.7
C1102	4030011600	S.CER C1608 JB 1E 104K-T	B	29.5/77
C1103	4030011600	S.CER C1608 JB 1E 104K-T	B	65.2/54.5
J4	6510022621	S.CON 10FMN-BMTTR-A-TBT(LF)(SN)	B	296/70.3
J21	6510022621	S.CON 10FMN-BMTTR-A-TBT(LF)(SN)	B	63.8/29.4
J31	6510022621	S.CON 10FMN-BMTTR-A-TBT(LF)(SN)	B	58.6/70.7
J33	6510018971	S.CON B4B-PH-SM4-TB(LF)(SN)	B	38.8/87.8
J107	6510026080	CON XM7A-0441		
J113	6510022621	S.CON 10FMN-BMTTR-A-TBT(LF)(SN)	B	309.8/29.5
J114	6510018971	S.CON B4B-PH-SM4-TB(LF)(SN)	B	280.7/10.7
J141	6510022621	S.CON 10FMN-BMTTR-A-TBT(LF)(SN)	B	53.6/49.7
J301	6510021722	S.CON 30FLT-SM2-TB(LF)(SN)(M)	B	176.9/96.5
J407	6510026740	S.CON IMSA-9637S-60Y922	B	177.4/52.1
J601	6510026730	S.CON IMSA-9637S-08Y902	B	208.5/48.6
J603	6510022611	S.CON 16FMN-BMTTR-A-TBT(LF)(SN)	B	27.6/52.7
J604	6510021722	S.CON 30FLT-SM2-TB(LF)(SN)(M)	B	196.7/96.1
DS51	5040003420	S.LED SMLE12BC7T T86	T	9.7/40.7
DS1001	5040003390	S.LED FR1111C-TR	T	90.1/104
DS1002	5040002930	S.LED SML-512MW T86	T	296.1/73.9
DS1003	5040002930	S.LED SML-512MW T86	T	111.1/104
DS1004	5040002930	S.LED SML-512MW T86	T	309.6/73.9
DS1005	5040003400	S.LED SMLE12WBC7W1AR	T	149.6/104
DS1006	5040003380	S.LED FY1111C-TR	T	194.6/104
DS1007	5040002930	S.LED SML-512MW T86	T	323.6/73.9
DS1100	5040002930	S.LED SML-512MW T86	T	9.7/99.6
DS1101	5040003390	S.LED FR1111C-TR	T	9.7/98.3
DS1102	5040003390	S.LED FR1111C-TR	T	27.7/87
DS1103	5040002930	S.LED SML-512MW T86	T	27.7/88.3
DS1104	5040002930	S.LED SML-512MW T86	T	30.3/48.6

[DISPLAY UNIT]

REF NO.	PARTS NO.	DESCRIPTION	M.	H/V LOCATION
DS1105	5040002930	S.LED SML-512MW T86	T	45.7/88.3
DS1106	5040002930	S.LED SML-512MW T86	T	48.7/48.6
S1001	2260002740	S.SWI LS8J2M-T	T	228.9/101.2
S1002	2260002740	S.SWI LS8J2M-T	T	228.9/89.6
S1003	2260002740	S.SWI LS8J2M-T	T	228.9/78.1
S1004	2260002740	S.SWI LS8J2M-T	T	228.9/66.5
S1005	2260002740	S.SWI LS8J2M-T	T	228.9/53.5
S1006	2260002740	S.SWI LS8J2M-T	T	244.3/103
S1007	2260002740	S.SWI LS8J2M-T	T	244.3/95.1
S1008	2260002740	S.SWI LS8J2M-T	T	244.3/87.3
S1009	2260002740	S.SWI LS8J2M-T	T	244.3/79.4
S1010	2260002740	S.SWI LS8J2M-T	T	244.3/71.6
S1011	2260002740	S.SWI LS8J2M-T	T	244.3/63.7
S1012	2260002740	S.SWI LS8J2M-T	T	260.2/103
S1013	2260002740	S.SWI LS8J2M-T	T	260.2/95.1
S1014	2260002740	S.SWI LS8J2M-T	T	260.2/87.3
S1015	2260002740	S.SWI LS8J2M-T	T	260.2/79.4
S1016	2260002740	S.SWI LS8J2M-T	T	260.2/71.6
S1017	2260002740	S.SWI LS8J2M-T	T	260.2/63.7
S1018	2260002740	S.SWI LS8J2M-T	T	276.1/103
S1019	2260002740	S.SWI LS8J2M-T	T	276.1/95.1
S1020	2260002740	S.SWI LS8J2M-T	T	276.1/87.3
S1021	2260002740	S.SWI LS8J2M-T	T	276.1/79.4
S1022	2260002740	S.SWI LS8J2M-T	T	276.1/71.6
S1023	2260002740	S.SWI LS8J2M-T	T	276.1/63.7
S1024	2260002740	S.SWI LS8J2M-T	T	277.5/53.5
S1025	2260002740	S.SWI LS8J2M-T	T	295.8/69.4
S1026	2260002740	S.SWI LS8J2M-T	T	295.8/32.3
S1027	2260002740	S.SWI LS8J2M-T	T	286.8/2.3
S1028	2260002740	S.SWI LS8J2M-T	T	309.8/69.4
S1029	2260002740	S.SWI LS8J2M-T	T	309.8/32.3
S1030	2260002740	S.SWI LS8J2M-T	T	323.8/69.4
S1031	2260002740	S.SWI LS8J2M-T	T	323.8/32.3
S1101	2260002740	S.SWI LS8J2M-T	T	10/95.2
S1102	2260002740	S.SWI LS8J2M-T	T	10/83.7
S1103	2260002740	S.SWI LS8J2M-T	T	28/83.7
S1104	2260002740	S.SWI LS8J2M-T	T	30.6/44.2
S1105	2260002740	S.SWI LS8J2M-T	T	46/83.7
S1106	2260002740	S.SWI LS8J2M-T	T	49/44.2
S1107	2260002740	S.SWI LS8J2M-T	T	66.3/88.8
S1108	2260002740	S.SWI LS8J2M-T	T	66.3/80.2
S1109	2260002740	S.SWI LS8J2M-T	T	66.3/71.6
S1110	2260002740	S.SWI LS8J2M-T	T	66.3/63
S1111	2260002740	S.SWI LS8J2M-T	T	66.3/54.4
S1112	2260002740	S.SWI LS8J2M-T	T	66.3/45.8
S1113	2260002740	S.SWI LS8J2M-T	T	66.3/37.2
S1201	2260002740	S.SWI LS8J2M-T	T	91.7/12.7
S1202	2260002740	S.SWI LS8J2M-T	T	91.7/6.1
S1203	2260002740	S.SWI LS8J2M-T	T	113.2/12.7
S1204	2260002740	S.SWI LS8J2M-T	T	113.2/6.1
S1205	2260002740	S.SWI LS8J2M-T	T	134.7/12.7
S1206	2260002740	S.SWI LS8J2M-T	T	134.7/6.1
S1207	2260002740	S.SWI LS8J2M-T	T	156.2/12.7
S1208	2260002740	S.SWI LS8J2M-T	T	156.2/6.1
S1209	2260002740	S.SWI LS8J2M-T	T	213.6/6.1
S1210	2260002740	S.SWI LS8J2M-T	T	177.7/12.7
S1211	2260002740	S.SWI LS8J2M-T	T	177.7/6.1
S1212	2260002740	S.SWI LS8J2M-T	T	223.8/6.1
S1213	2260002740	S.SWI LS8J2M-T	T	199.2/12.7
S1214	2260002740	S.SWI LS8J2M-T	T	199.2/6.1
S1215	2260002740	S.SWI LS8J2M-T	T	218.6/12.7
EP2	6910020190	UNI L5S30853P00		
EP11	6910014730	S.BEA MPZ2012S331A-T	B	6.5/38.3
EP12	6910014730	S.BEA MPZ2012S331A-T	B	14.5/36.9
EP31	6910012350	S.BEA MMZ1608Y 102BT	B	68/72.6
EP32	6910012350	S.BEA MMZ1608Y 102BT	B	68.5/68.2
EP33	6910012350	S.BEA MMZ1608Y 102BT	B	68.5/67
EP40	6910012350	S.BEA MMZ1608Y 102BT	B	54/75.5
EP41	6910012350	S.BEA MMZ1608Y 102BT	B	54/74.2
EP42	6910014690	S.BEA MPZ1608S221A-T	B	42/55.6
EP43	6910014690	S.BEA MPZ1608S221A-T	B	54.7/58.4
EP101	6910014690	S.BEA MPZ1608S221A-T	B	139.7/56.1
EP151	6910014690	S.BEA MPZ1608S221A-T	B	196.4/92.5
EP152	6910014690	S.BEA MPZ1608S221A-T	B	197.6/92.5
EP161	6910014730	S.BEA MPZ2012S331A-T	B	188.5/91.2
EP162	6910014730	S.BEA MPZ2012S331A-T	B	192.8/91.2
EP163	6910014730	S.BEA MPZ2012S331A-T	B	199.7/92.2
EP401	6910014730	S.BEA MPZ2012S331A-T	B	143.3/89.3
EP402	6910020910	S.BEA MPZ1608S300AT	B	131.7/73.8
EP403	6910012350	S.BEA MMZ1608Y 102BT	B	111.9/71.6
EP404	6910012350	S.BEA MMZ1608Y 102BT	B	126.4/76
EP405	6910012350	S.BEA MMZ1608Y 102BT	B	123.4/76
EP602	6910014730	S.BEA MPZ2012S331A-T	B	257.4/64.8
EP603	6910014730	S.BEA MPZ2012S331A-T	B	234.7/66.6
EP605	6910014730	S.BEA MPZ2012S331A-T	B	266.6/74.3
EP606	6910014730	S.BEA MPZ2012S331A-T	B	245.4/74.2
EP607	6910014690	S.BEA MPZ1608S221A-T	B	181.6/61.1
EP608	6910014690	S.BEA MPZ1608S221A-T	B	183.2/83.8
EP611	6910020910	S.BEA MPZ1608S300AT	B	266.2/78.1
EP612	6910020910	S.BEA MPZ1608S300AT	B	245.8/77.9

M.=Mounted side (T: Mounted on the Top side, B: Mounted on the Bottom side)
S.=Surface mount

[MIC UNIT]

REF NO.	PARTS NO.	DESCRIPTION		M.	H/V LOCATION
L1	6200003261	S.COI	NLV32T-101J	T	9/15
L2	6200003261	S.COI	NLV32T-101J	T	2.7/15
L3	6200003261	S.COI	NLV32T-101J	T	6/15
C1	4030006900	S.CER	C1608 JB 1H 103K-T	T	8.2/9.1
C2	4030006900	S.CER	C1608 JB 1H 103K-T	T	11.5/16.3
C3	4030006900	S.CER	C1608 JB 1H 103K-T	T	8.2/5.7
C4	4030007130	S.CER	C1608 CH 1H 101J-T	T	20.2/1.6
C5	4030006900	S.CER	C1608 JB 1H 103K-T	T	16.5/16.3
C6	4030006900	S.CER	C1608 JB 1H 103K-T	T	22.3/10.4
C7	4030006900	S.CER	C1608 JB 1H 103K-T	T	13.6/10.6
C8	4030007090	S.CER	C1608 CH 1H 470J-T	T	9.5/9.1
J1	6510000191	CON	FM214-8SS(P)-1		
J2	6510022621	S.CON	10FMN-BMTTR-A-TBT(LF)(SN)	T	4/6.5
EP2	6910012350	S.BEA	MMZ1608Y 102BT	T	17.7/14.9
EP3	6910012350	S.BEA	MMZ1608Y 102BT	T	21.1/10.4
EP4	6910012350	S.BEA	MMZ1608Y 102BT	T	9.7/4.5
EP5	6910012350	S.BEA	MMZ1608Y 102BT	T	12/14.5
EP6	6910014690	S.BEA	MPZ1608S221A-T	T	16/10.9
EP7	6910015130	S.BEA	MMZ1608D 301BT	T	12.1/2
EP8	6910015130	S.BEA	MMZ1608D 301BT	T	12.1/3.3
EP9	6910015130	S.BEA	MMZ1608D 301BT	T	18.2/2.3
EP10	6910015130	S.BEA	MMZ1608D 301BT	T	17/2.4
EP11	6910012350	S.BEA	MMZ1608Y 102BT	T	9/12.4
EP12	6910014690	S.BEA	MPZ1608S221A-T	T	8.5/3.1

[JACK UNIT]

REF NO.	PARTS NO.	DESCRIPTION		M.	H/V LOCATION
R1	7030006240	S.RES	ERJ12YJ181U (180)	T	8.1/18.1
R2	7030006240	S.RES	ERJ12YJ181U (180)	T	8.2/26.5
R486	7030003580	S.RES	ERJ3GEYJ 153 V (15K)	T	6.1/7.6
R487	7310004300	S.TRI	EVM-3SSX50 B13	T	11/8
C1	4030006900	S.CER	C1608 JB 1H 103K-T	T	2.5/10.4
C2	4030006900	S.CER	C1608 JB 1H 103K-T	T	5.2/13.2
C101	4030006900	S.CER	C1608 JB 1H 103K-T	T	3.7/32.5
C102	4030006900	S.CER	C1608 JB 1H 103K-T	T	3.7/31
J1	6510022621	S.CON	10FMN-BMTTR-A-TBT(LF)(SN)	T	3.7/21.8
J2	6510023891	CON	S-G4617#01F		
J102	6510023900	CON	LGR4619-7000		
EP1	6910014690	S.BEA	MPZ1608S221A-T	T	4.4/11.1
EP2	6910014690	S.BEA	MPZ1608S221A-T	T	2.8/13.2
EP3	6910014690	S.BEA	MPZ1608S221A-T	T	4/13.2
EP101	6910012350	S.BEA	MMZ1608Y 102BT	T	7.2/32.5
EP102	6910012350	S.BEA	MMZ1608Y 102BT	T	7.2/31

[VR-A UNIT]

REF NO.	PARTS NO.	DESCRIPTION		M.	H/V LOCATION
R1	7210002970	VAR	RV-314(RK0972210 10KB/10KB)		
R2	7210002970	VAR	RV-314(RK0972210 10KB/10KB)		
R3	7030003520	S.RES	ERJ3GEYJ 472 V (4.7K)	T	6.5/12.3
R4	7030003520	S.RES	ERJ3GEYJ 472 V (4.7K)	T	6.5/13.6
R5	7030003520	S.RES	ERJ3GEYJ 472 V (4.7K)	T	43.4/12.3
R6	7030003520	S.RES	ERJ3GEYJ 472 V (4.7K)	T	43.4/13.6
R33	7030003860	S.RES	ERJ3GE JPW V	T	34.2/8.3
R34	7030003860	S.RES	ERJ3GE JPW V	T	32.9/8.3
R35	7030003860	S.RES	ERJ3GE JPW V	T	31.6/8.3
R38	7030003860	S.RES	ERJ3GE JPW V	T	31.6/11.1
C1	4030006900	S.CER	C1608 JB 1H 103K-T	T	39.9/13.6
C2	4030006900	S.CER	C1608 JB 1H 103K-T	T	39.9/12.3
C3	4030006900	S.CER	C1608 JB 1H 103K-T	T	10/13.6
C4	4030006900	S.CER	C1608 JB 1H 103K-T	T	10/12.3
J32	6510022621	S.CON	10FMN-BMTTR-A-TBT(LF)(SN)	T	35/4
J33	6510022611	S.CON	16FMN-BMTTR-A-TBT(LF)(SN)	T	17/4
EP34	6910012350	S.BEA	MMZ1608Y 102BT	T	40.7/8.3
EP35	6910012350	S.BEA	MMZ1608Y 102BT	T	39.4/8.3
EP36	6910012350	S.BEA	MMZ1608Y 102BT	T	38.1/8.3
EP37	6910012350	S.BEA	MMZ1608Y 102BT	T	36.8/8.3
EP38	6910014690	S.BEA	MPZ1608S221A-T	T	35.5/8.3
EP39	6910012350	S.BEA	MMZ1608Y 102BT	T	30.3/8.3
EP43	6910012350	S.BEA	MMZ1608Y 102BT	T	28.5/8.3
EP44	6910012350	S.BEA	MMZ1608Y 102BT	T	27.2/8.3
EP45	6910012350	S.BEA	MMZ1608Y 102BT	T	25.9/8.3

[VR-B UNIT]

REF NO.	PARTS NO.	DESCRIPTION		M.	H/V LOCATION
R1	7210002970	VAR	RV-314(RK0972210 10KB/10KB)		
R2	7030003520	S.RES	ERJ3GEYJ 472 V (4.7K)	T	44/9.8
R3	7030003520	S.RES	ERJ3GEYJ 472 V (4.7K)	T	44/11.1
J1	6510022621	S.CON	10FMN-BMTTR-A-TBT(LF)(SN)	T	25.1/4.3
S1	2250000410	ENC	TP90D96E20-30F-2178-1		

[VR-C UNIT]

REF NO.	PARTS NO.	DESCRIPTION		M.	H/V LOCATION
R1	7210001130	VAR	RK097111T005A (10KB)		
R2	7210001130	VAR	RK097111T005A (10KB)		
R3	7210001130	VAR	RK097111T005A (10KB)		
R4	7210001130	VAR	RK097111T005A (10KB)		
R11	7030003520	S.RES	ERJ3GEYJ 472 V (4.7K)	T	22/10.6
R12	7030003520	S.RES	ERJ3GEYJ 472 V (4.7K)	T	19/10.6
R13	7030003520	S.RES	ERJ3GEYJ 472 V (4.7K)	T	13/10.6
R14	7030003520	S.RES	ERJ3GEYJ 472 V (4.7K)	T	16/10.6
C11	4030006900	S.CER	C1608 JB 1H 103K-T	T	20.5/10.6
C12	4030006900	S.CER	C1608 JB 1H 103K-T	T	17.6/10.6
C13	4030006900	S.CER	C1608 JB 1H 103K-T	T	11.5/10.6
C14	4030006900	S.CER	C1608 JB 1H 103K-T	T	14.5/10.6
J1	6510022621	S.CON	10FMN-BMTTR-A-TBT(LF)(SN)	T	14.7/5.4

[RIT UNIT]

REF NO.	PARTS NO.	DESCRIPTION		M.	H/V LOCATION
J1	6510022621	S.CON	10FMN-BMTTR-A-TBT(LF)(SN)	T	4/9
S1	2250000650	ENC	EVEGC2F2524B		

M.=Mounted side (T: Mounted on the Top side, B: Mounted on the Bottom side)
S.=Surface mount

[DCDC UNIT]

REF NO.	PARTS NO.	DESCRIPTION		M.	H/V LOCATION
IC101	1180003100	S.REG	BD9302FP-E2	T	51.2/22.5
IC201	1190002450	S.IC	BD9851FEV-E2	T	11/12.7
Q201	1550000230	S.FET	SSM3J117TU(TE85L)	T	22.8/15.8
D101	1750000960	S.DIO	RB081L-20	T	59.9/21.7
D102	1750000960	S.DIO	RB081L-20	T	42.4/21.7
D201	1790001450	S.DIO	RB160L-40 TE-25	T	23.4/27.3
L101	6200010881	S.COI	CDRH124NP-330MC	T	64/11.8
L102	6200013280	S.COI	SLF10145T-330M1R6-PF	T	67.2/24.2
L103	6200013280	S.COI	SLF10145T-330M1R6-PF	T	35.1/24.2
L201	6200011551	S.COI	CDRH6D28NP-270NC	T	7.4/28.5
L202	6200011300	S.COI	EXCML16A270U	T	22.6/31.5
L203	6180003501	S.COI	SLF6028T-100M1R3-PF	T	21.5/20.6
L204	6200011300	S.COI	EXCML16A270U	T	19.7/16.5
R101	7030003600	S.RES	ERJ3GEYJ 223 V (22K)	T	52.6/30.8
R102	7030003600	S.RES	ERJ3GEYJ 223 V (22K)	T	49.8/30.8
R103	7030003680	S.RES	ERJ3GEYJ 104 V (100K)	T	55.4/32.1
R104	7030003600	S.RES	ERJ3GEYJ 223 V (22K)	T	47/30.8
R105	7030005451	S.RES	ERA3YED 153V (15K)	T	52.6/29.5
R106	7030003560	S.RES	ERJ3GEYJ 103 V (10K)	T	57.4/28.7
R107	7030003560	S.RES	ERJ3GEYJ 103 V (10K)	T	44.9/28.7
R108	7030003440	S.RES	ERJ3GEYJ 102 V (1K)	T	60.1/30.8
R109	7030003440	S.RES	ERJ3GEYJ 102 V (1K)	T	44.2/30.8
R110	7030003520	S.RES	ERJ3GEYJ 472 V (4.7K)	T	47/32.1
R111	7030003520	S.RES	ERJ3GEYJ 472 V (4.7K)	T	58/30.8
R201	7030005691	S.RES	ERA3YED 123V (12K)	T	23.8/8.4
R202	7030003440	S.RES	ERJ3GEYJ 102 V (1K)	T	22.5/8.4
R203	7030007230	S.RES	ERA3YED 102V (1K)	T	20.5/6.4
R204	7030006461	S.RES	ERA3YED 152V (1.5K)	T	20.5/9
R205	7030005981	S.RES	ERA3YED 333V (33K)	T	15.6/9.6
R206	7030003700	S.RES	ERJ3GEYJ 154 V (150K)	T	21.3/12.3
R207	7030005451	S.RES	ERA3YED 153V (15K)	T	19.2/10.3
R208	7030005321	S.RES	ERA3YED 103V (10K)	T	18.5/8.2
R209	7030003440	S.RES	ERJ3GEYJ 102 V (1K)	T	19.2/11.6
R210	7030003740	S.RES	ERJ3GEYJ 334 V (330K)	T	23.2/13
C101	4030007070	S.CER	C1608 CH 1H 330J-T	T	55.4/30.8
C102	4030007070	S.CER	C1608 CH 1H 330J-T	T	49.6/32.1
C103	4030008650	S.CER	C1608 JB 1H 332K-T	T	55.4/29.5
C104	4030008650	S.CER	C1608 JB 1H 332K-T	T	47/29.5
C105	4030007130	S.CER	C1608 CH 1H 101J-T	T	47/28.2
C106	4030007130	S.CER	C1608 CH 1H 101J-T	T	55.4/28.2
C107	4030011600	S.CER	C1608 JB 1E 104K-T	T	52.4/28.2
C108	4030011600	S.CER	C1608 JB 1E 104K-T	T	49.8/29.5
C109	4030011600	S.CER	C1608 JB 1E 104K-T	T	55.7/17.2
C110	4030011600	S.CER	C1608 JB 1E 104K-T	T	46.6/17.2
C111	4030011600	S.CER	C1608 JB 1E 104K-T	T	52.7/17.2
C112	4510009700	S.ELE	EEEFK1C101P	T	47.4/10
C113	4030019500	S.CER	GRM21BB31A106KE18 (GRM40 B)	T	59.1/27.7
C114	4030018960	S.CER	C3216 JB 1C 106MT-N	T	52.8/13.9
C115	4030019500	S.CER	GRM21BB31A106KE18 (GRM40 B)	T	41.5/27.7
C116	4030019500	S.CER	GRM21BB31A106KE18 (GRM40 B)	T	60.8/27.7
C117	4030019500	S.CER	GRM21BB31A106KE18 (GRM40 B)	T	43.3/27.7
C201	4510009700	S.ELE	EEEFK1C101P	T	7.7/20.8
C202	4030011600	S.CER	C1608 JB 1E 104K-T	T	14/26
C203	4030011600	S.CER	C1608 JB 1E 104K-T	T	18.6/24.7
C204	4030018960	S.CER	C3216 JB 1C 106MT-N	T	19.1/26.4
C205	4030018960	S.CER	C3216 JB 1C 106MT-N	T	17.2/16.5
C206	4030010020	S.CER	C1608 JB 1H 122K-T	T	20.5/7.7
C207	4030007070	S.CER	C1608 CH 1H 330J-T	T	16.9/10.1
C208	4030008860	S.CER	C1608 JB 1H 153K-T	T	19.2/12.9
C209	4030011600	S.CER	C1608 JB 1E 104K-T	T	23.2/11.7
C210	4030011600	S.CER	C1608 JB 1E 104K-T	T	6.4/8.9
C211	4030019090	S.CER	C2012 JB 1C 225M-T	T	12.4/26.3
C212	4030011600	S.CER	C1608 JB 1E 104K-T	T	5.6/13.4
C213	4030017490	S.CER	C1608 JB 1A 105K-T	T	5/11.4
C214	4030018960	S.CER	C3216 JB 1C 106MT-N	T	19.1/28.6
J1	6910020210	CON	IMSA-9180S-12Z900		
F1	5210001050	S.FUS	ICP-S0.5TN	T	51.5/41.1
EP101	6910014730	S.BEA	MPZ2012S331A-T	T	61.7/31
EP102	6910014730	S.BEA	MPZ2012S331A-T	T	40.9/31
EP103	6910014730	S.BEA	MPZ2012S331A-T	T	71.3/16.1
EP201	6910014730	S.BEA	MPZ2012S331A-T	T	19.2/31.5
EP202	6910014730	S.BEA	MPZ2012S331A-T	T	12.4/31

M.=Mounted side (T: Mounted on the Top side, B: Mounted on the Bottom side)
S.=Surface mount

E

O

C E

C I

11

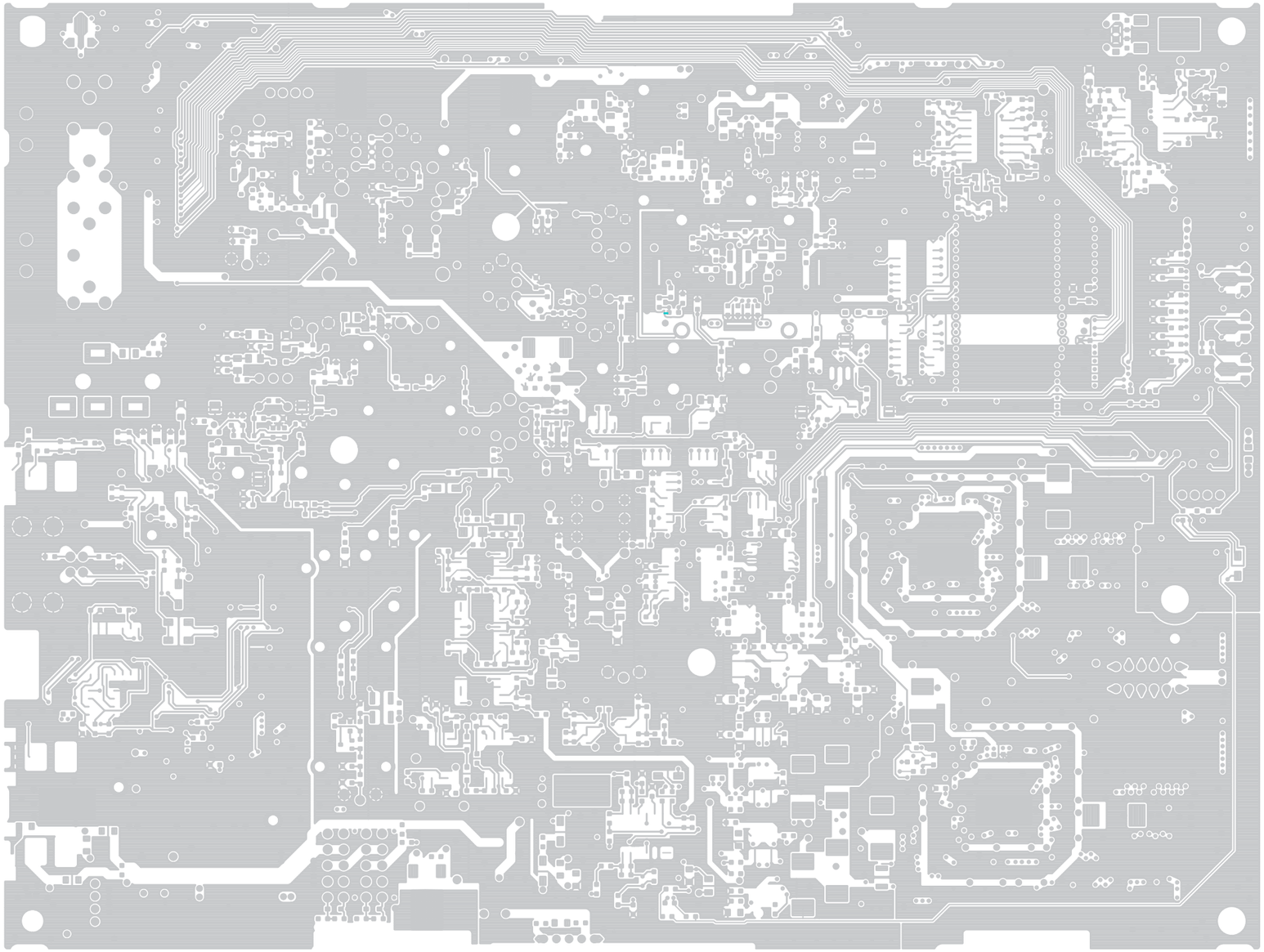

The combination of this side and the bottom side shows the board layout in the same configuration as the actual P.C.Board.

• DISPLAY UNIT (TOP VIEW)

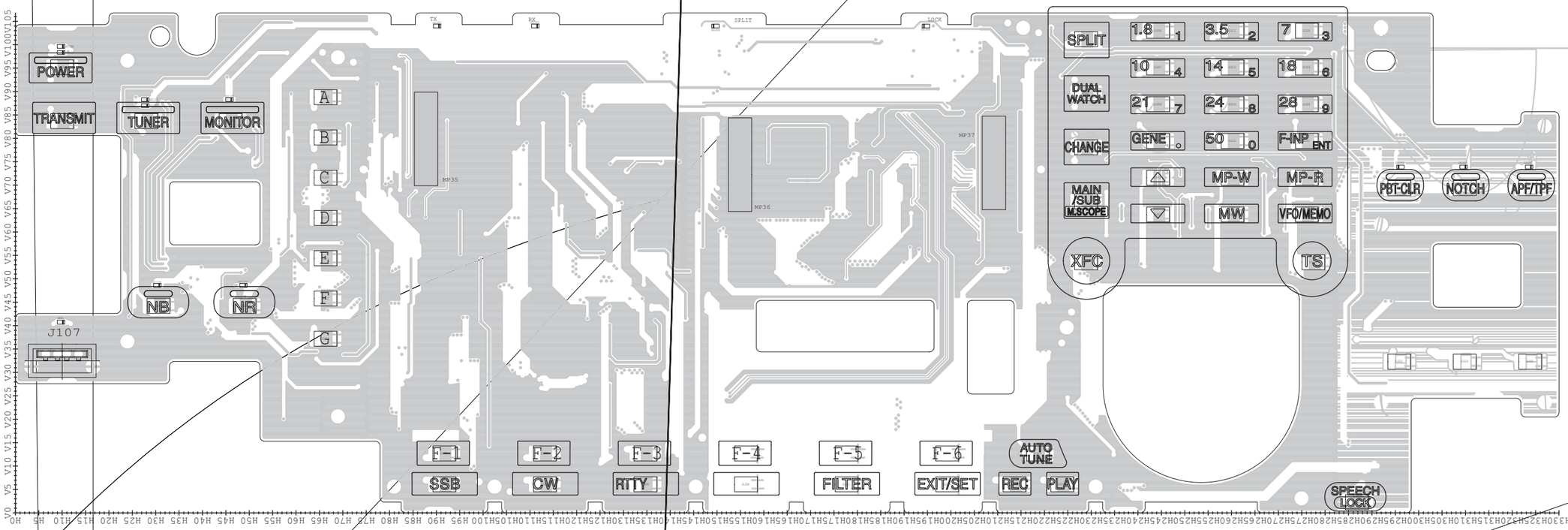

• MIC BOARD (TOP VIEW)

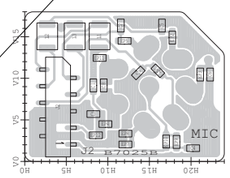

The combination of this side and the bottom side shows the board layout in the same configuration as the actual P.C.Board.

• DISPLAY UNIT (BOTTOM VIEW)

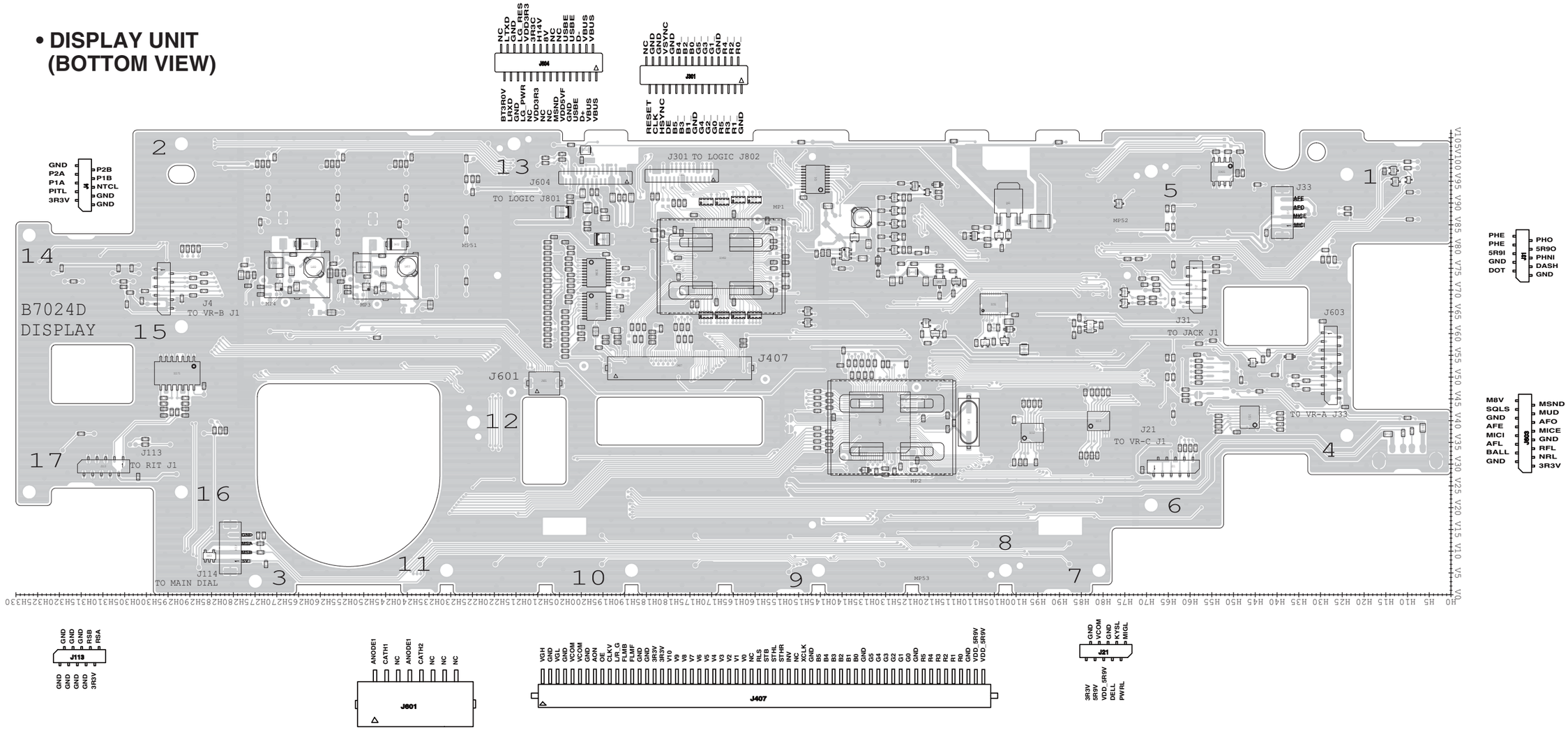

• MIC BOARD (BOTTOM VIEW)

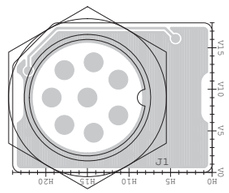

VOLTAGE DIAGRAM

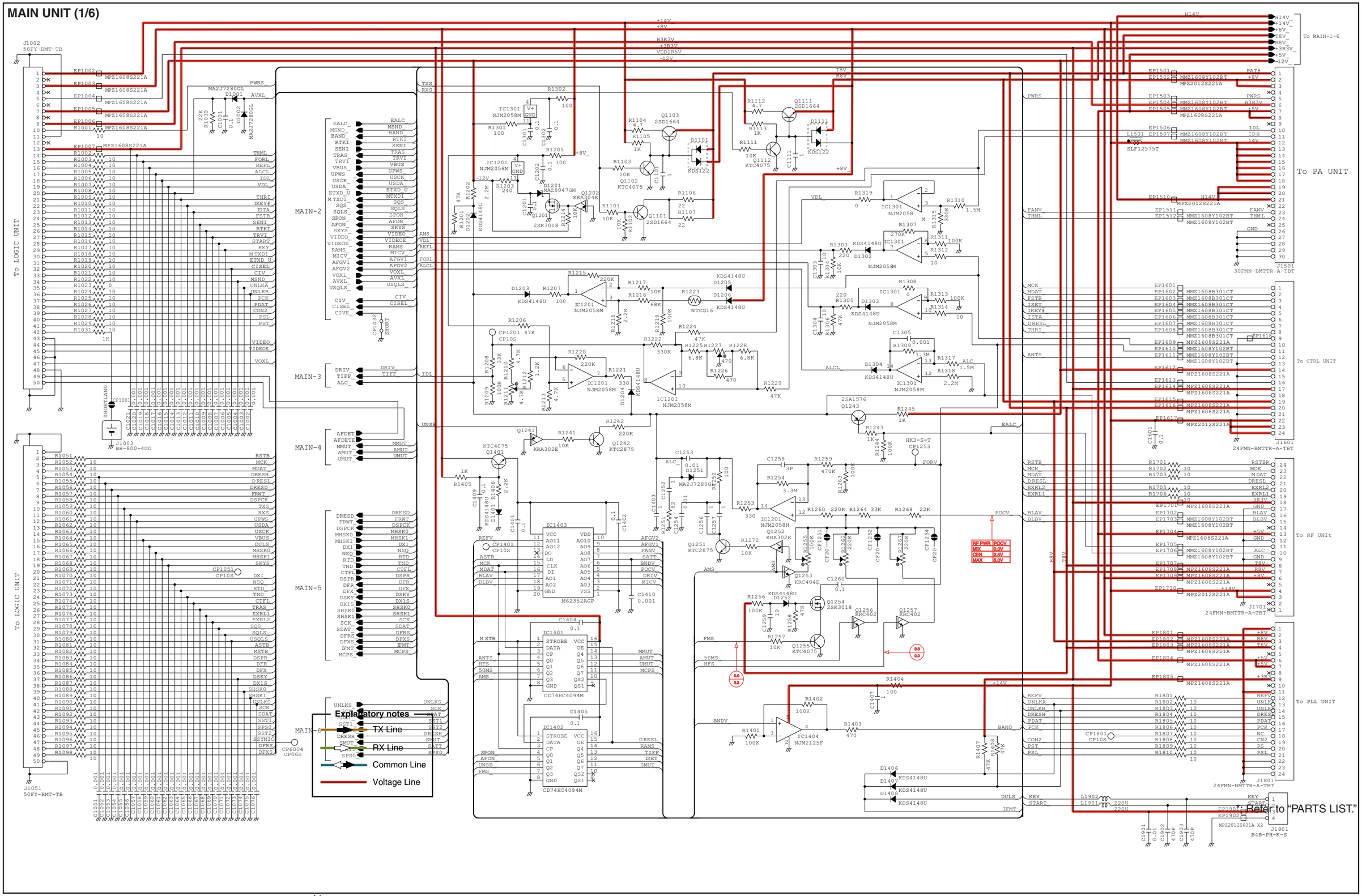

MAIN UNIT (2/6)

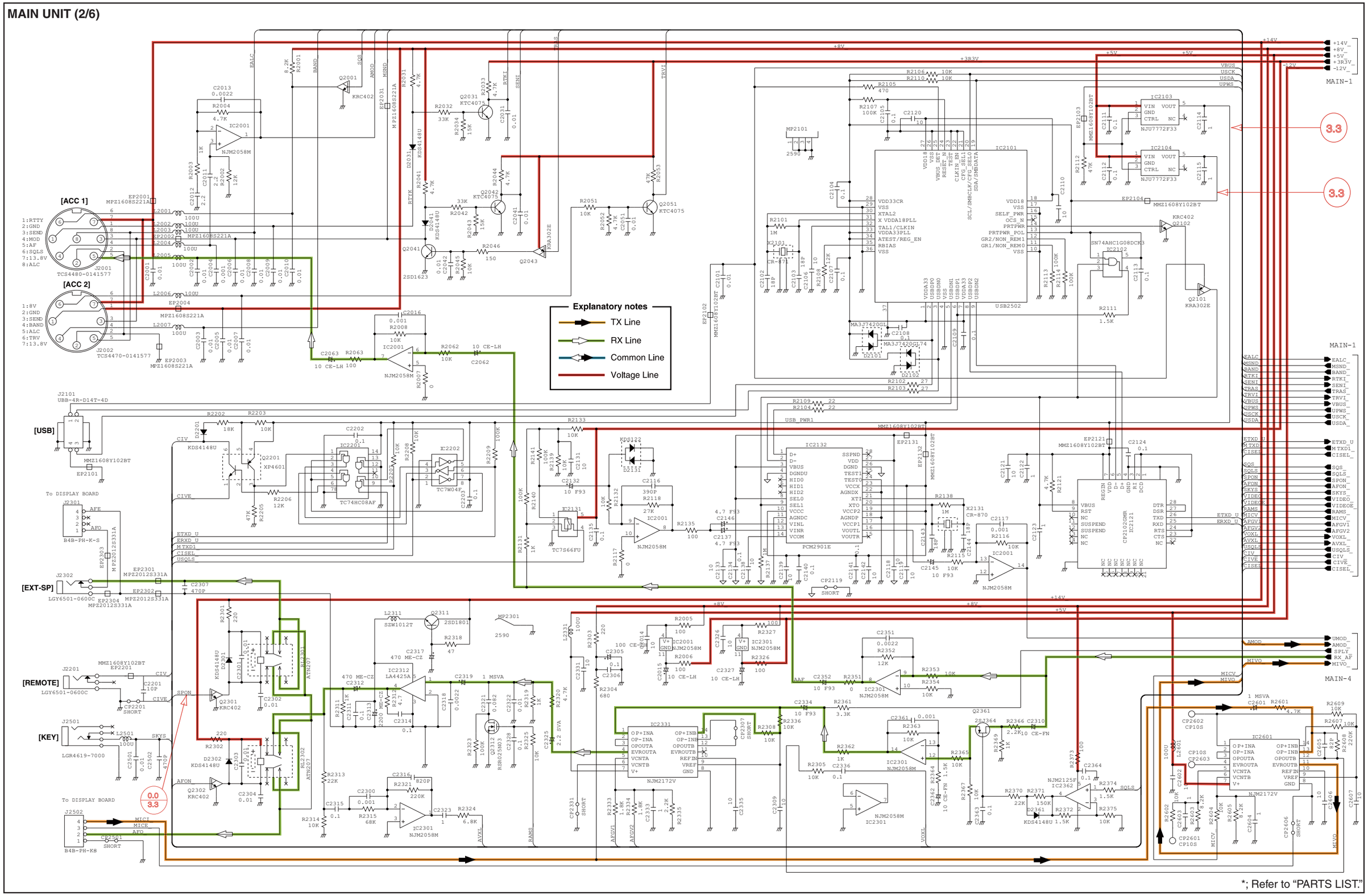

*; Refer to "PARTS LIST."

MAIN UNIT (3/6)

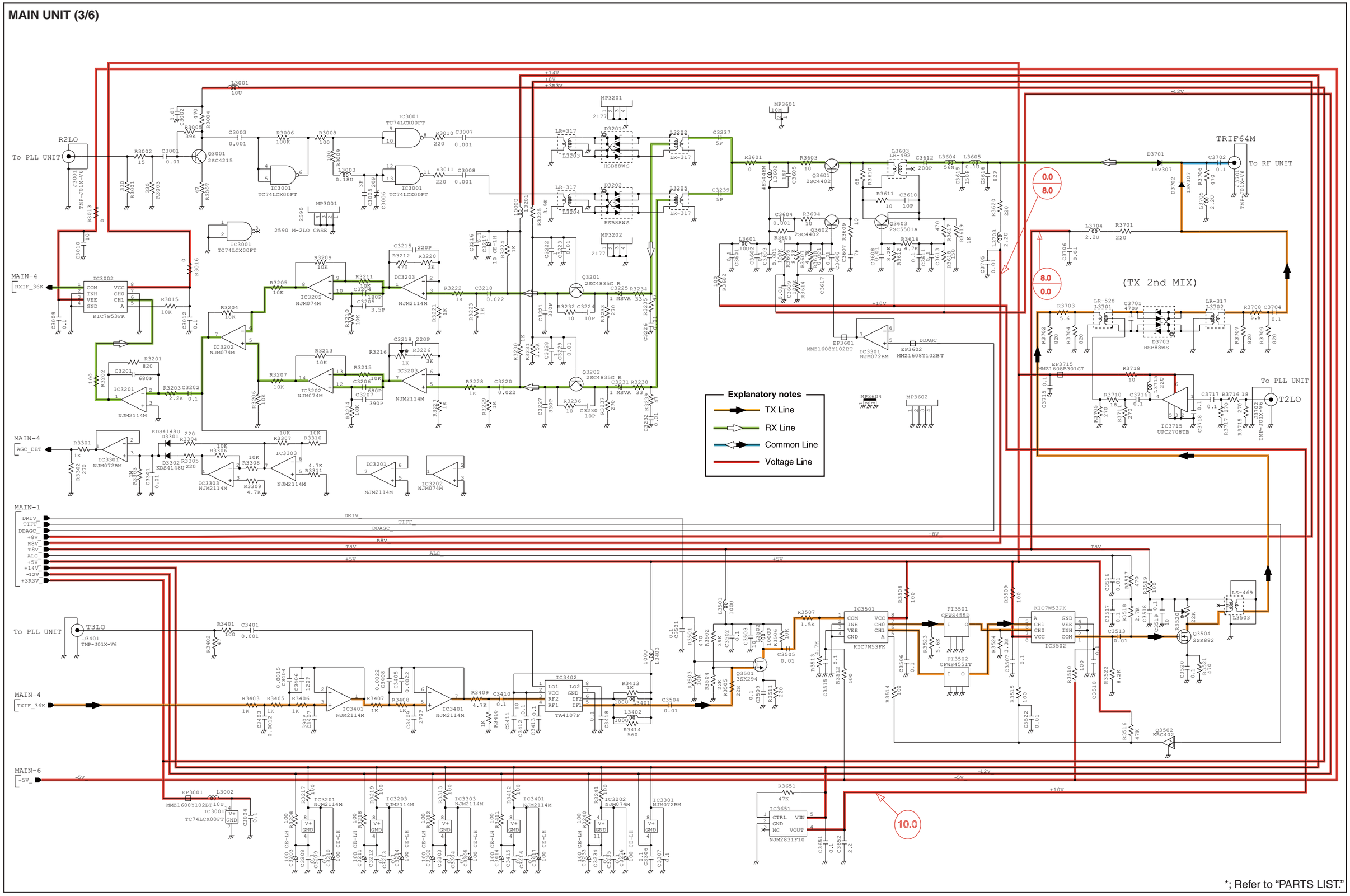

*; Refer to "PARTS LIST."

MAIN UNIT (4/6)

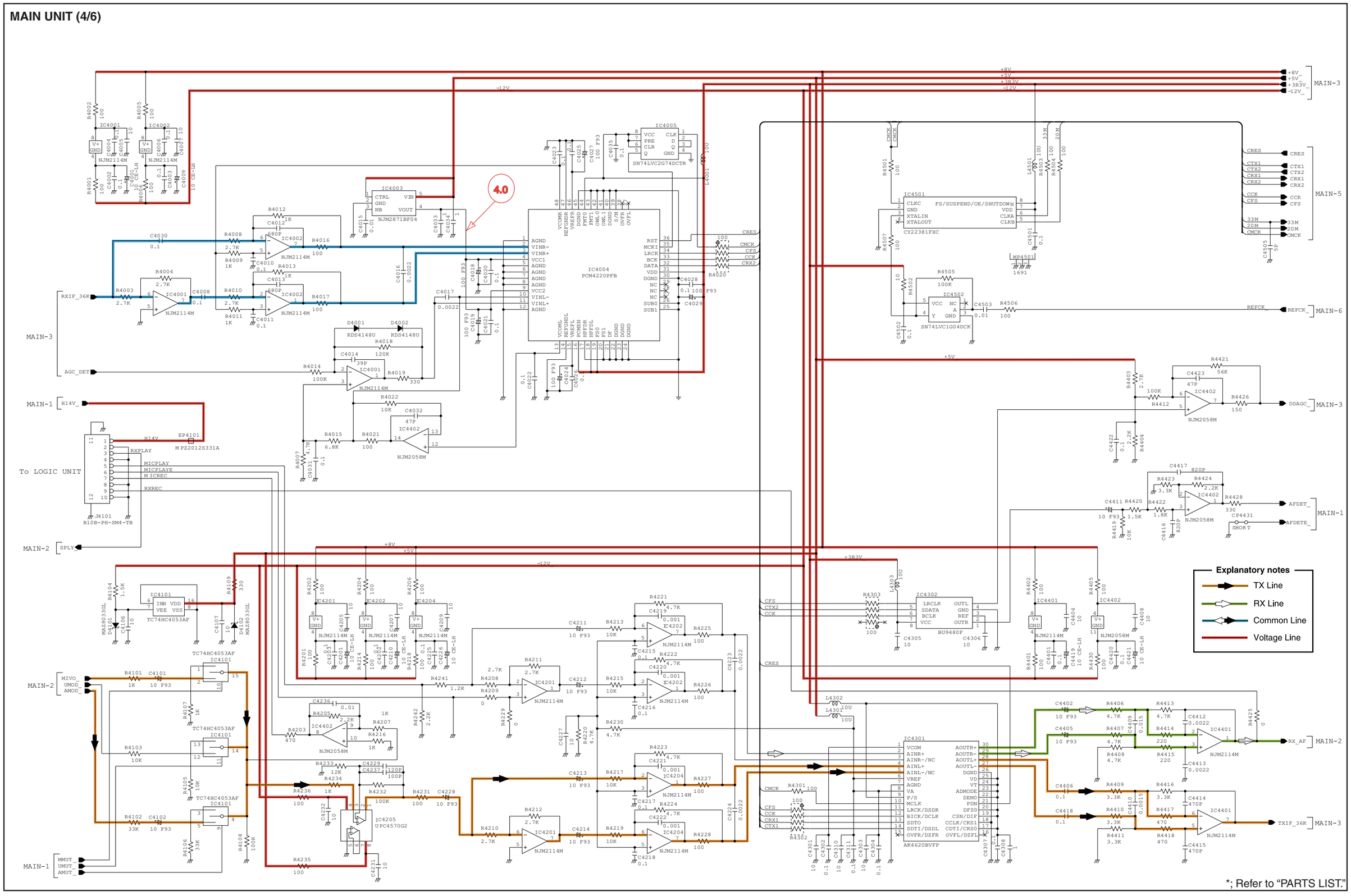

*; Refer to "PARTS LIST."

MAIN UNIT (5/6)

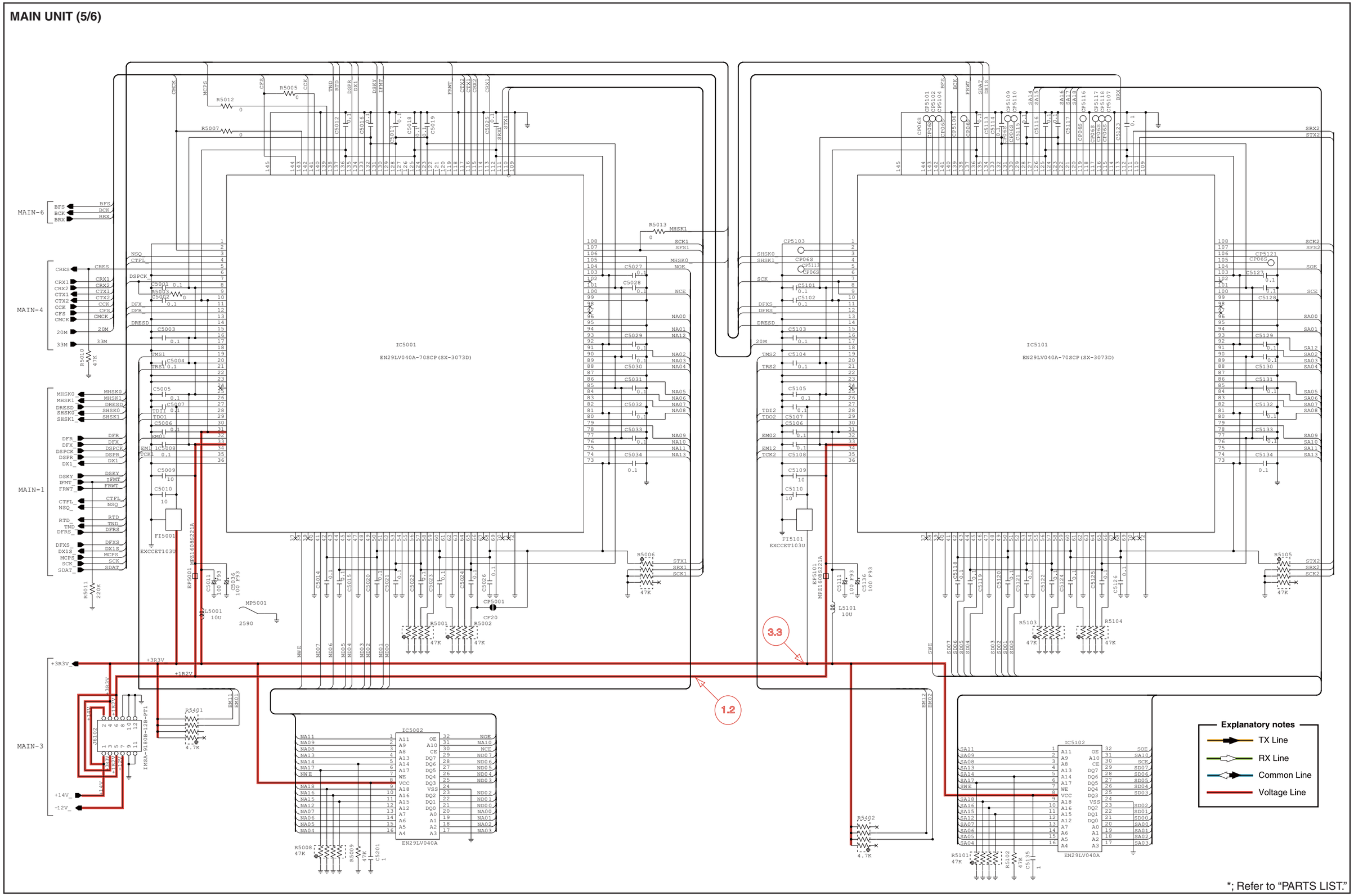

*; Refer to "PARTS LIST."

MAIN UNIT (6/6)

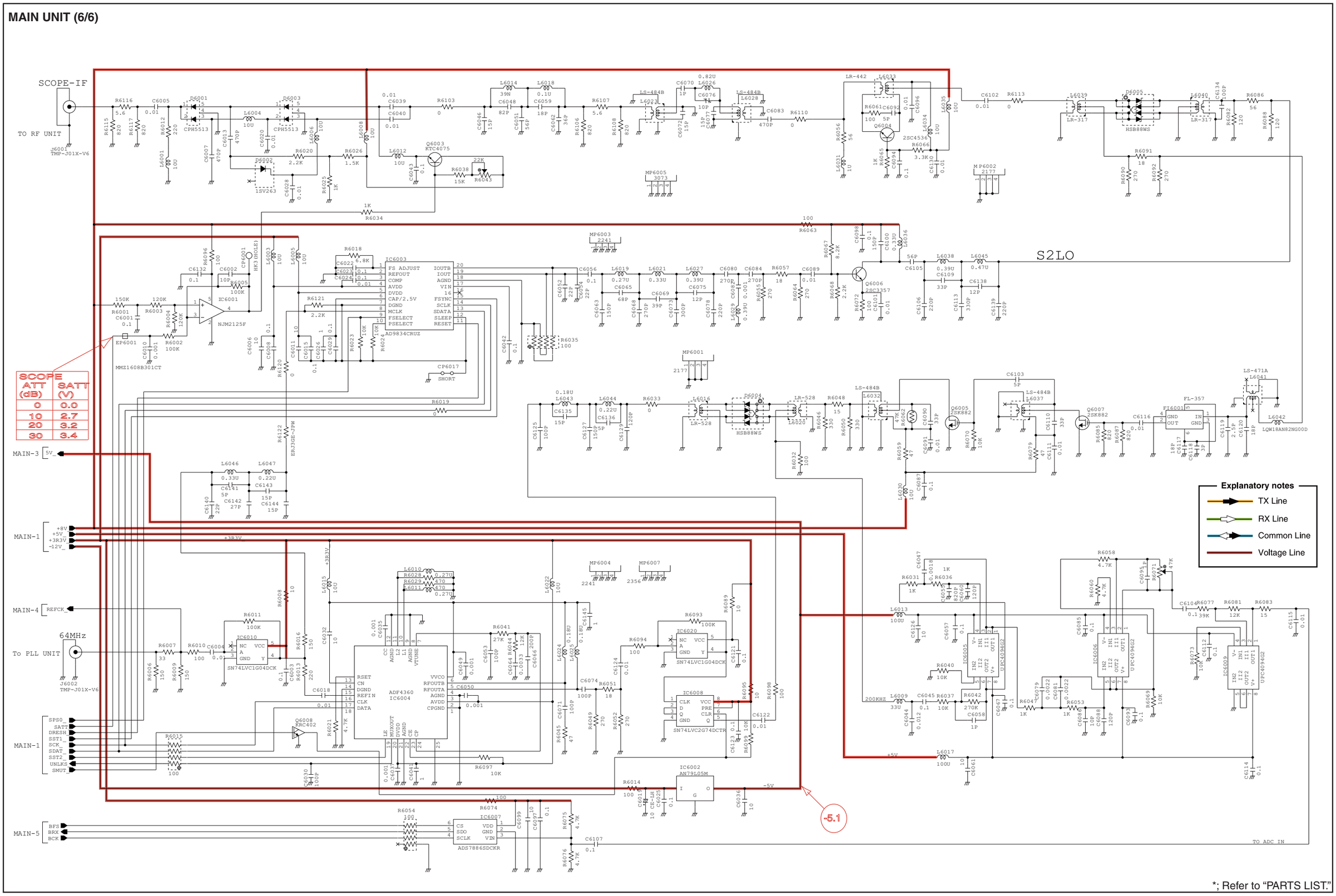

*; Refer to "PARTS LIST."

RF UNIT (1/2)

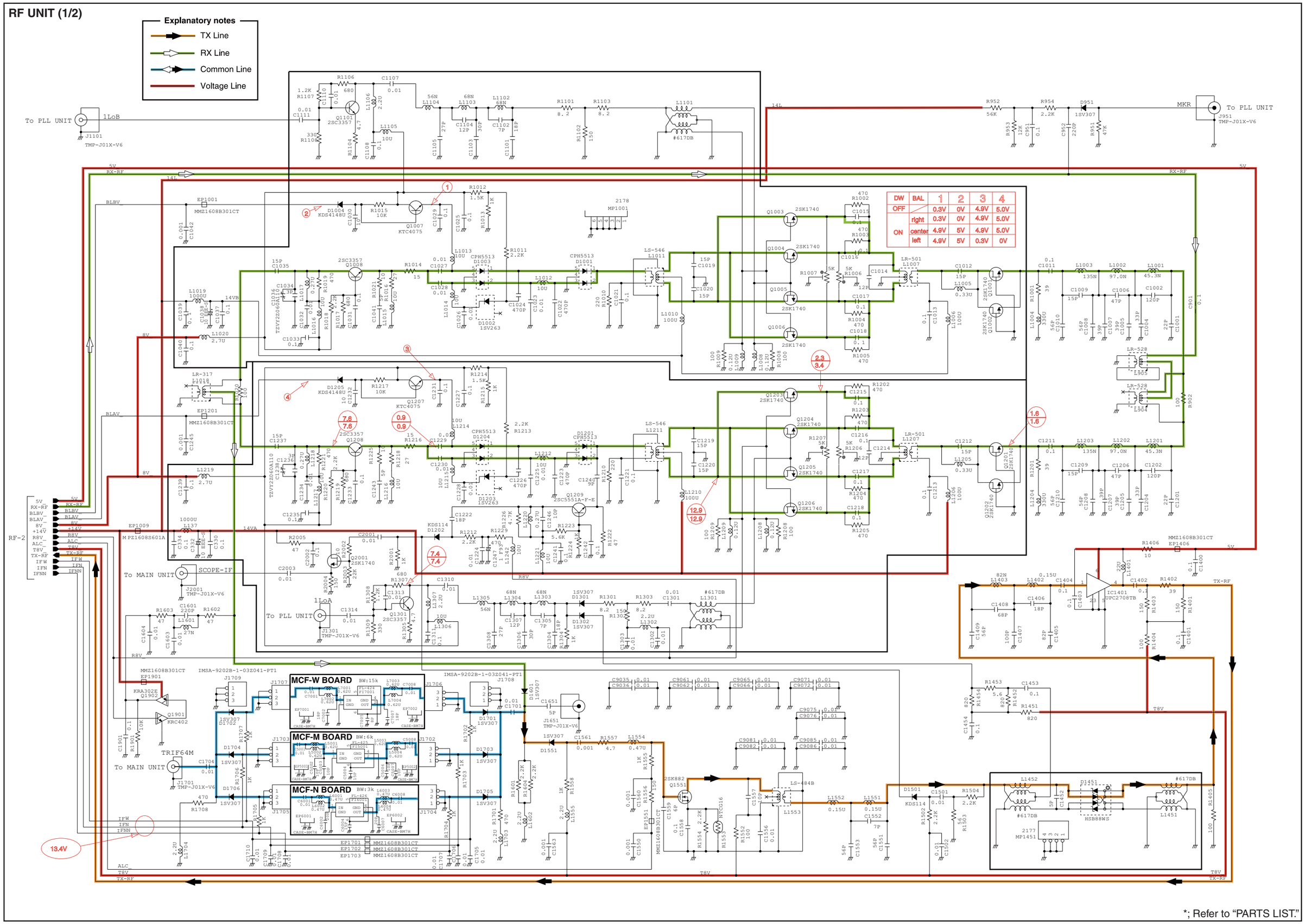

*; Refer to "PARTS LIST."

RF UNIT (2/2)

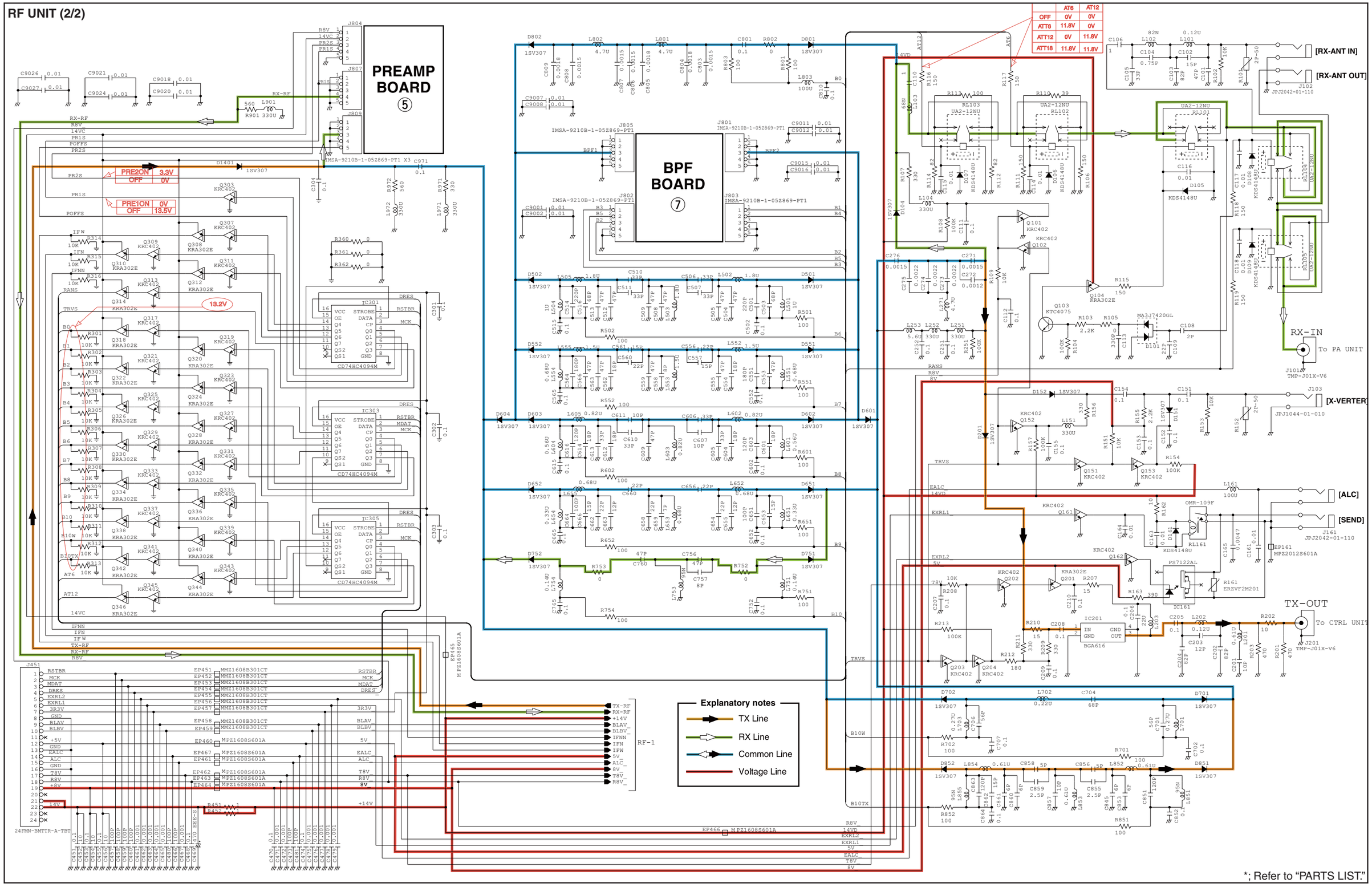
PREAMP BOARD
⑤
BPF BOARD
⑦
[RX-ANT IN]
[RX-ANT OUT]
RX-IN
To PA UNIT
[X-VERTER]
[ALC]
[SEND]
TX-OUT
To CTRL UNIT
Explanatory notes
TX Line
RX Line
Common Line
Voltage Line
*; Refer to "PARTS LIST."

ICOM

SERVICE MANUAL

HF/50 MHz TRANSCEIVER

IC-7600

S-14523XZ-C1
Mar. 2009

Icom Inc.

INTRODUCTION

This service manual describes the latest technical information for the **IC-7600** HF/50 MHz TRANSCEIVER TRANSCEIVER at the time of publication.

MODEL	VERSION	TX OUTPUT POWER
IC-7600	[USA]	100 W
	[EUR]	
	[EUR-1]	
	[ESP]	
	[KOR]	
	[TPE]	
	[CHN]	
	[ITR]	
	[FRA]	
	[EXP]	

CAUTION

NEVER connect the transceiver to an AC outlet or to a DC power supply that uses more than specified. This will ruin the transceiver.

DO NOT expose the transceiver to rain, snow or any liquids.

DO NOT reverse the polarities of the power supply when connecting the transceiver.

DO NOT apply an RF signal of more than 20 dBm (100 mW) to the antenna connector. This could damage the transceiver's front-end.

To upgrade quality, any electrical or mechanical parts and internal circuits are subject to change without notice or obligation.

ORDERING PARTS

Be sure to include the following four points when ordering replacement parts:

1. 10-digit Icom parts numbers
2. Component name
3. Equipment model name and unit name
4. Quantity required

<ORDER EXAMPLE>

1130013010	SN74AHC1G08DCK3	IC-7600	LOGIC UNIT	1 piece
8930079060	3073 DC PLATE	IC-7600	CHASSIS	2 pieces

Addresses are provided on the inside back cover for your convenience.

REPAIR NOTES

1. Make sure that the problem is internal before disassembling the transceiver.
2. **DO NOT** open the transceiver until the transceiver is disconnected from its power source.
3. **DO NOT** force any of the variable components. Turn them slowly and smoothly.
4. **DO NOT** short any circuits or electronic parts. An insulated tuning tool **MUST** be used for all adjustments.
5. **DO NOT** keep power ON for a long time when the transceiver is defective.
6. **DO NOT** transmit power into a Standard Signal Generator or a Sweep Generator.
7. **ALWAYS** connect a 50 dB to 60 dB attenuator between the transceiver and a Deviation Meter or Spectrum Analyzer when using such test equipment.
8. **READ** the instructions of test equipment throughly before connecting a test equipment to the transceiver.

Icom, Icom Inc. and ICOM logo are registered trademarks of Icom Incorporated (Japan) in Japan, the United States, the United Kingdom, Germany, France, Spain, Russia and/or other countries.

TABLE OF CONTENTS

SECTION 1 SPECIFICATIONS

SECTION 2 INSIDE VIEWS

SECTION 3 CIRCUIT DESCRIPITON

3-1 RECEIVER CIRCUITS 3-1
3-2 TRANSMITTER CIRCUITS 3-3
3-3 FREQUENCY SYNTHESIZER CIRCUITS 3-6
3-4 VOLTAGE BLOCK DIAGRAM 3-8
3-5 CPU PORT ALLOCATIONS 3-9

SECTION 4 ADJUSTMENT PROCEDURES

4-1 PREPARATION 4-1
4-2 REFERENCE FREQUENCY SIGNAL LEVEL ADJUSTMENT 4-3
4-3 PLL UNIT ADJUSTMENT 4-3
4-4 PA UNIT ADJUSTMENT 4-6
4-5 CTRL UNIT ADJUSTMENT 4-8
4-6 MAIN ADJUSTMENT 4-9
4-7 MAIN UNIT (SCOPE) ADJUSTMENT 4-13
4-8 RF UNIT ADJUSTMENT 4-15
4-9 SOFTWARE ADJUSTMENT 4-17

SECTION 5 PARTS LIST

SECTION 6 MECHANICAL PARTS

SECTION 7 BOARD LAYOUTS

SECTION 8 GENERAL WIRING

SECTION 9 BLOCK DIAGRAM

SECTION 10 VOLTAGE DIAGRAM

LOGIC UNIT 10-1
DISPLAY UNIT (Incl. VR-A, VR-B, VR-C, MIC, JACK and RIT BOARDS) 10-5
MAIN UNIT 10-8
PLL UNIT 10-14
RF UNIT 10-17
TUNER UNIT 10-19
FILTER UNIT 10-20
CTRL UNIT 10-21
BPF UNIT 10-24
DCDC UNIT 10-24
BPF UNIT 10-24
PREAMP BOARD 10-25
PA UNIT 10-25

SECTION 1 SPECIFICATIONS

■ General

- Frequency coverage : (unit: MHz)
  Receive
  0.030–60.000*1*2
  Transmit
  1.800–1.999*2, 3.500–3.999*2,
  5.33050*3, 5.34650*3, 5.36650*3,
  5.37150*3, 5.40350*3,
  7.000–7.300*2, 10.100–10.150*2,
  14.000–14.350*2, 18.068–18.168*2,
  21.000–21.450*2, 24.890–24.990*2,
  28.000–29.700*2, 50.000–54.000*2
  *1Some frequency bands are not guaranteed.
  *2Depending on version. *3USA version only.
- Mode : USB, LSB, CW, RTTY, PSK, AM, FM
- No. of memory channels : 101 (99 regular, 2 scan edges)
- Antenna connector type : SO-239 × 2 and phono jack (RCA; 50 Ω impedance)
- Temperature range : 0˚C to +50˚C (+32˚F to +122˚F)
- Frequency stability : Less than ±0.5 ppm 5 min. after power ON. (0˚C to +50˚C; +32˚F to +122˚F)
- Frequency resolution : 1 Hz
- Power supply : 13.8 V DC ±15% (negative ground)
- Power consumption
  Transmit : Max. power 23 A
  Receive : Standby 3.0 A
  Max. audio 3.5 A
- Dimensions : 340(W) × 116(H) × 279.3(D) mm
  (projections not included) 13⅜(W) × 4 9/16(H) × 11(D) in
- Weight (approx.) : 10.0 kg; 22 lb
- ACC 1 connector : 8-pin DIN connector
- ACC 2 connector : 7-pin DIN connector
- CI-V connector : 2-conductor 3.5 (d) mm (⅛″)
- Display : 5.8-inch (diagonal) TFT color LCD

■ Transmitter

- Output power (continuously adjustable)
  SSB/CW/RTTY/FM : Less than 2 to 100 W
  AM : Less than 1 to 30 W
- Modulation system
  SSB : Digital PSN modulation
  AM : Digital Low power modulation
  FM : Digital Phase modulation
- Spurious emission
  HF bands : Less than –50 dB
  50 MHz band : Less than –63 dB
- Carrier suppression : More than 40 dB
- Unwanted sideband suppression : More than 55 dB
- ⊿TX variable range : ±9.999 kHz
- Microphone connector : 8-pin connector (600 Ω)
- ELEC-KEY connector : 3-conductor 6.35(d) mm (¼″)
- KEY connector : 3-conductor 6.35(d) mm (¼″)
- SEND connector : Phono jack (RCA)
- ALC connector : Phono jack (RCA)

■ Receiver

- Receive system : Double superheterodyne system
- Intermediate frequencies
  1st : 64.455 MHz
  2nd : 36 kHz
- Sensitivity (typical)
  SSB, CW, RTTY : 0.15 μV (1.80–29.99 MHz)*1
  (10 dB S/N) BW=2.4 kHz 0.12 μV (50.0–54.0 MHz)*2
  AM (10 dB S/N) : 6.3 μV (0.1–1.799 MHz)*1
  BW=6 kHz 2 μV (1.80–29.99 MHz)*1
  1.6 μV (50.0–54.0 MHz)*2
  FM (12 dB SINAD) : 0.5 μV (28.0–29.99 MHz)*1
  BW=15 kHz 0.3 μV (50.0–54.0 MHz)*2
  *1Pre-amp 1 is ON. *2Pre-amp 2 is ON.
- Squelch sensitivity (Pre-amp: ON)
  SSB : Less than 3.2 μV
  FM : Less than 0.3 μV
- Selectivity (IF filter shape is set to SHARP.)
  SSB (BW: 2.4 kHz) : More than 2.4 kHz/–6 dB
  Less than 3.8 kHz/–60 dB
  CW (BW: 500 Hz) : More than 500 Hz/–6 dB
  Less than 900 Hz/–60 dB
  RTTY (BW: 350 Hz) : More than 350 Hz/–6 dB
  Less than 650 Hz/–60 dB
  AM (BW: 6 kHz) : More than 6.0 kHz/–6 dB
  Less than 15.0 kHz/–60 dB
  FM (BW: 15 kHz) : More than 12.0 kHz/–6 dB
  Less than 20.0 kHz/–60 dB
- Spurious and image rejection ratio : More than 70 dB (except IF through on 50 MHz band)
- AF output power (at 13.8 V DC) : More than 2.0 W at 10% distortion with an 8 Ω load
- RIT variable range : ±9.999 kHz
- PHONES connector : 3-conductor 6.35 (d) mm (¼″)
- External SP connector : 2-conductor 3.5 (d) mm (⅛″)/8 Ω
- DSP ANF attenuation : More than 30 dB (with 1 kHz single tone)
- DSP NR attenuation : More than 6 dB (noise rejection in SSB)

■ Antenna tuner

- Matching impedance range
  HF bands : 16.7 to 150 Ω unbalanced (Less than VSWR 3:1)
  50 MHz band : 20 to 125 Ω unbalanced (Less than VSWR 2.5:1)
- Minimum operating input power : 8 W (HF bands) 15 W (50MHz band)
- Tuning accuracy : VSWR 1.5:1 or less
- Insertion loss : Less than 1.0 dB
  (after tuning at RF power 100W)

Spurious signals may be displayed on the spectrum scope screen regardless of the transceiver's state (Tx or Rx). They are generated in the scope circuit. This does not indicate a transceiver malfunction.

All stated specifications are typical and subject to change without notice or obligation.

• **MAIN UNIT**

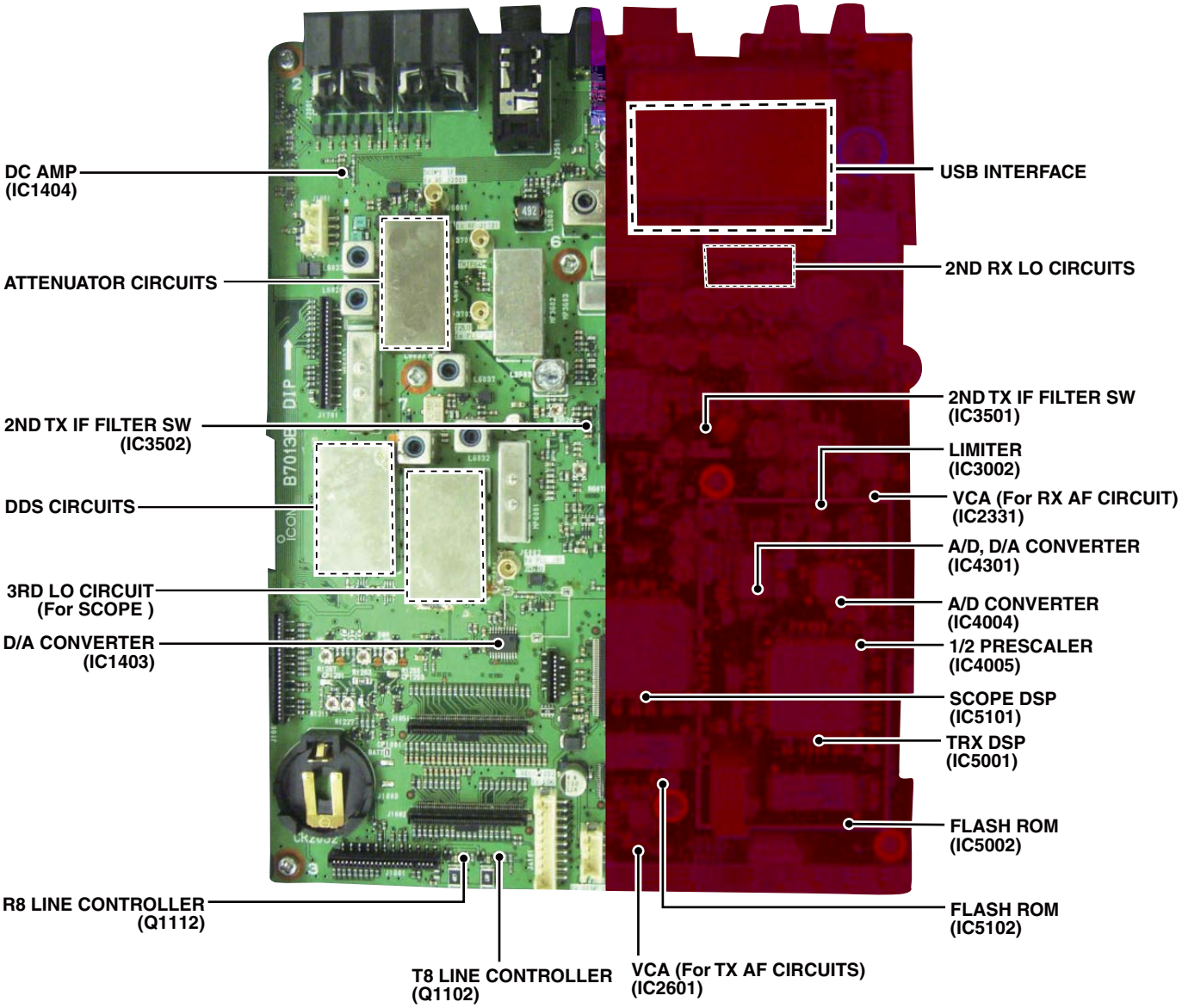
DC AMP
(IC1404)
ATTENUATOR CIRCUITS
2ND TX IF FILTER SW
(IC3502)
DDS CIRCUITS
3RD LO CIRCUIT
(For SCOPE)
D/A CONVERTER
(IC1403)
R8 LINE CONTROLLER
(Q1112)
T8 LINE CONTROLLER
(Q1102)
VCA (For TX AF CIRCUITS)
(IC2601)
USB INTERFACE
2ND RX LO CIRCUITS
2ND TX IF FILTER SW
(IC3501)
LIMITER
(IC3002)
VCA (For RX AF CIRCUIT)
(IC2331)
A/D, D/A CONVERTER
(IC4301)
A/D CONVERTER
(IC4004)
1/2 PRESCALER
(IC4005)
SCOPE DSP
(IC5101)
TRX DSP
(IC5001)
FLASH ROM
(IC5002)
FLASH ROM
(IC5102)

• CTRL UNIT

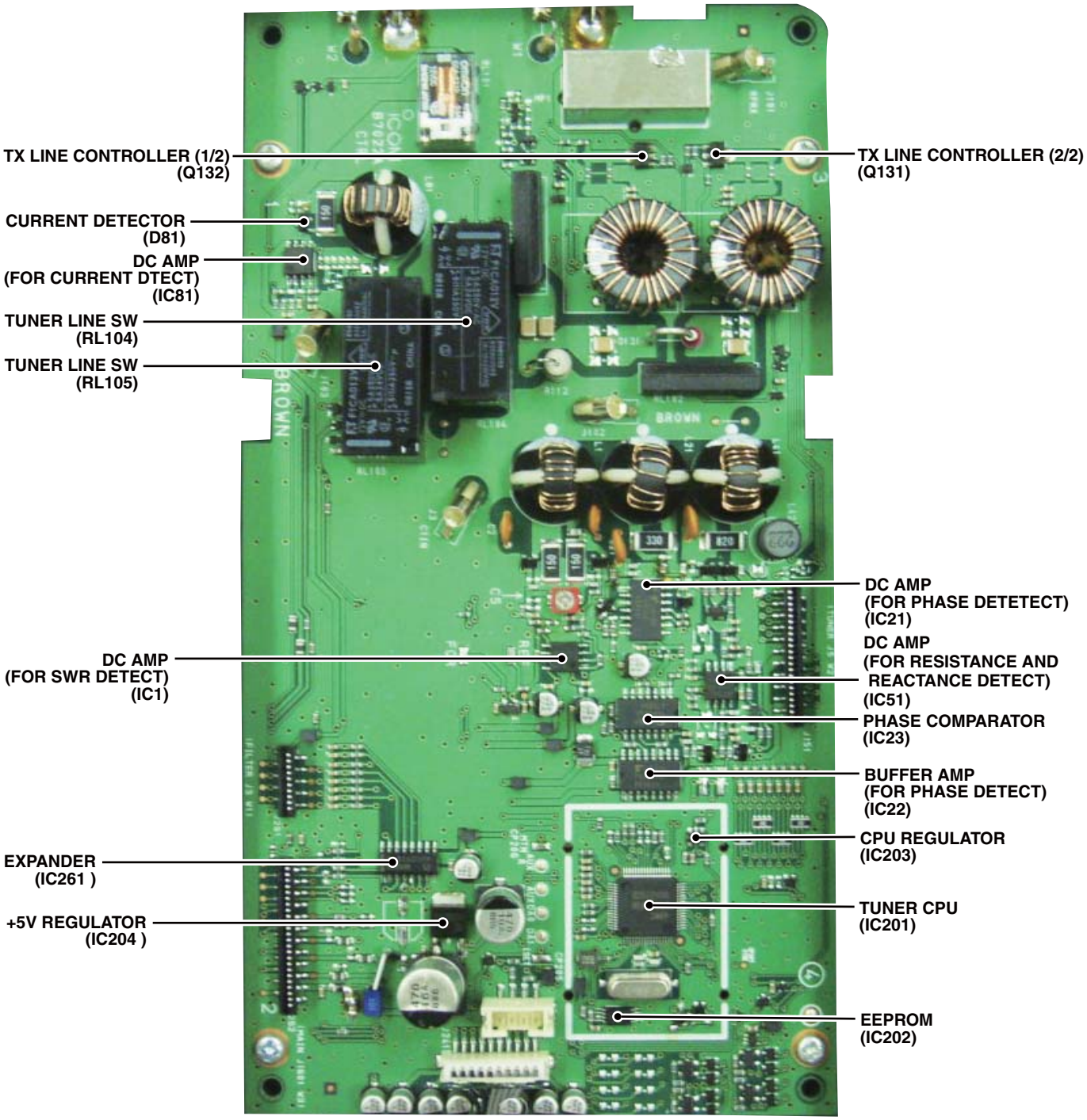
TX LINE CONTROLLER (1/2)
(Q132)
CURRENT DETECTOR
(D81)
DC AMP
(FOR CURRENT DTECT)
(IC81)
TUNER LINE SW
(RL104)
TUNER LINE SW
(RL105)
DC AMP
(FOR SWR DETECT)
(IC1)
EXPANDER
(IC261)
+5V REGULATOR
(IC204)
TX LINE CONTROLLER (2/2)
(Q131)
DC AMP
(FOR PHASE DETETECT)
(IC21)
DC AMP
(FOR RESISTANCE AND
REACTANCE DETECT)
(IC51)
PHASE COMPARATOR
(IC23)
BUFFER AMP
(FOR PHASE DETECT)
(IC22)
CPU REGULATOR
(IC203)
TUNER CPU
(IC201)
EEPROM
(IC202)

• **PA UNIT**

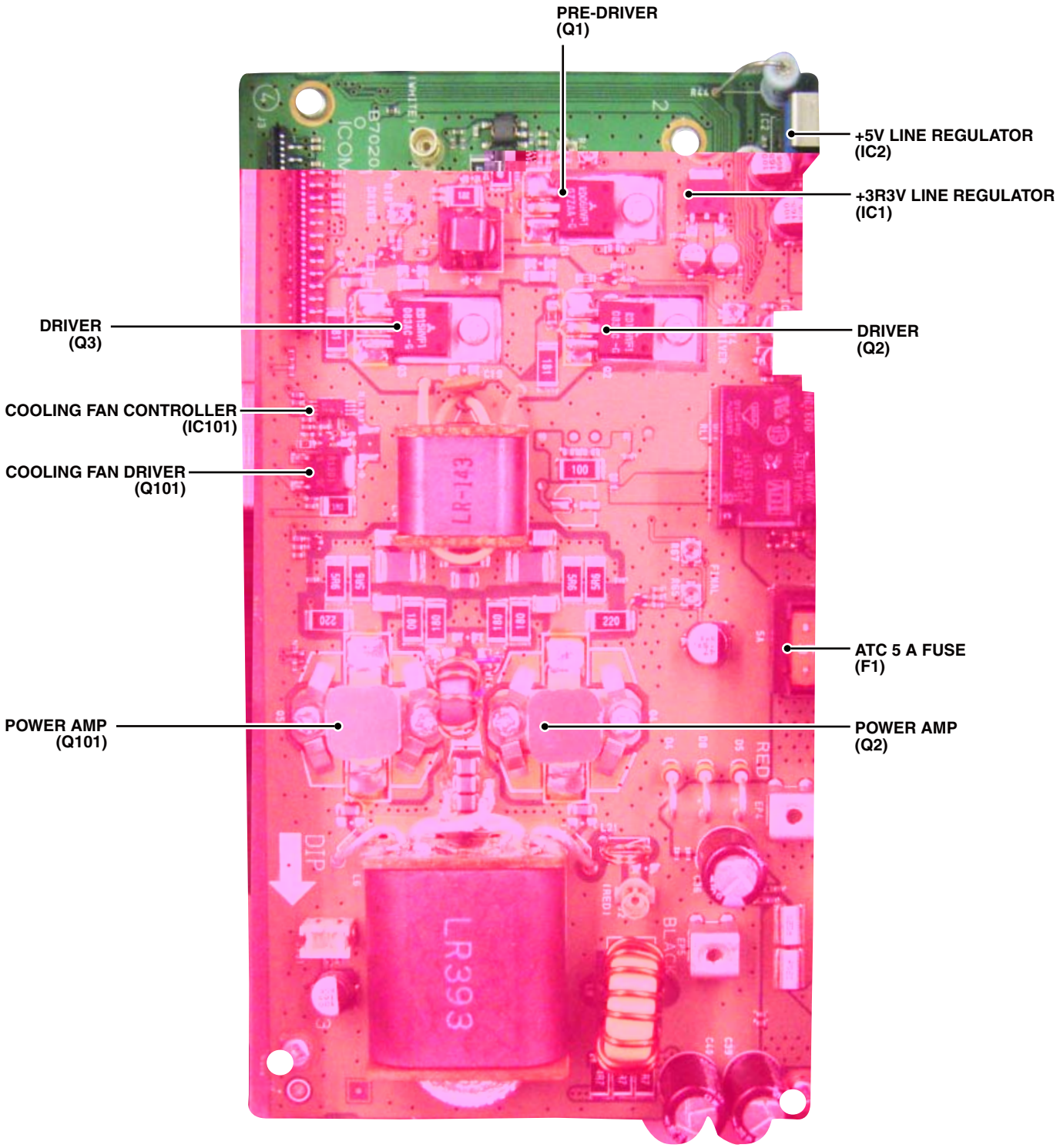
PRE-DRIVER
(Q1)
+5V LINE REGULATOR
(IC2)
+3R3V LINE REGULATOR
(IC1)
DRIVER
(Q3)
DRIVER
(Q2)
COOLING FAN CONTROLLER
(IC101)
COOLING FAN DRIVER
(Q101)
ATC 5 A FUSE
(F1)
POWER AMP
(Q101)
POWER AMP
(Q2)

• **PLL UNIT**

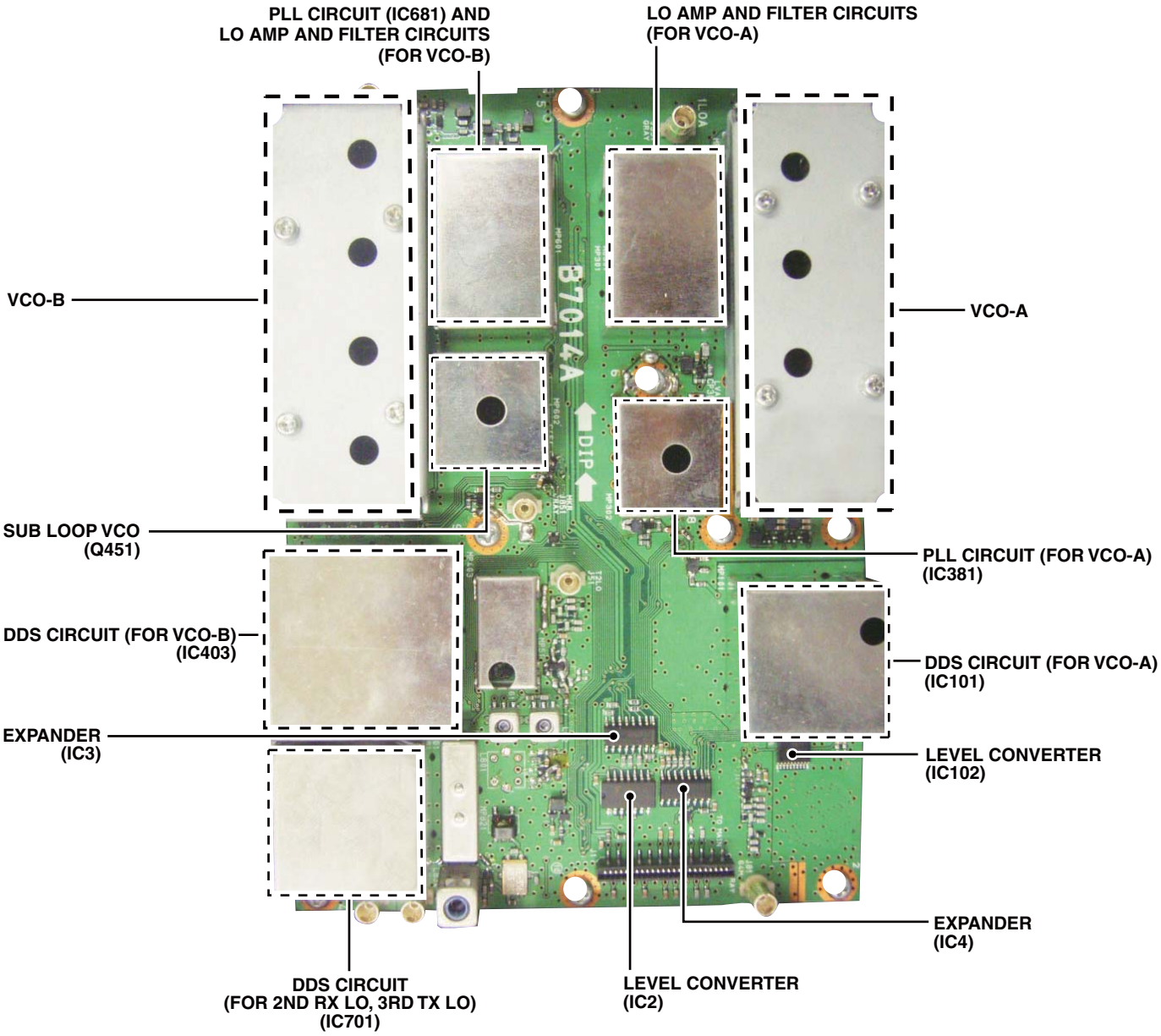
PLL CIRCUIT (IC681) AND
LO AMP AND FILTER CIRCUITS
(FOR VCO-B)
LO AMP AND FILTER CIRCUITS
(FOR VCO-A)
VCO-B
VCO-A
SUB LOOP VCO
(Q451)
PLL CIRCUIT (FOR VCO-A)
(IC381)
DDS CIRCUIT (FOR VCO-B)
(IC403)
DDS CIRCUIT (FOR VCO-A)
(IC101)
EXPANDER
(IC3)
LEVEL CONVERTER
(IC102)
EXPANDER
(IC4)
DDS CIRCUIT
(FOR 2ND RX LO, 3RD TX LO)
(IC701)
LEVEL CONVERTER
(IC2)

• **RF UNIT**

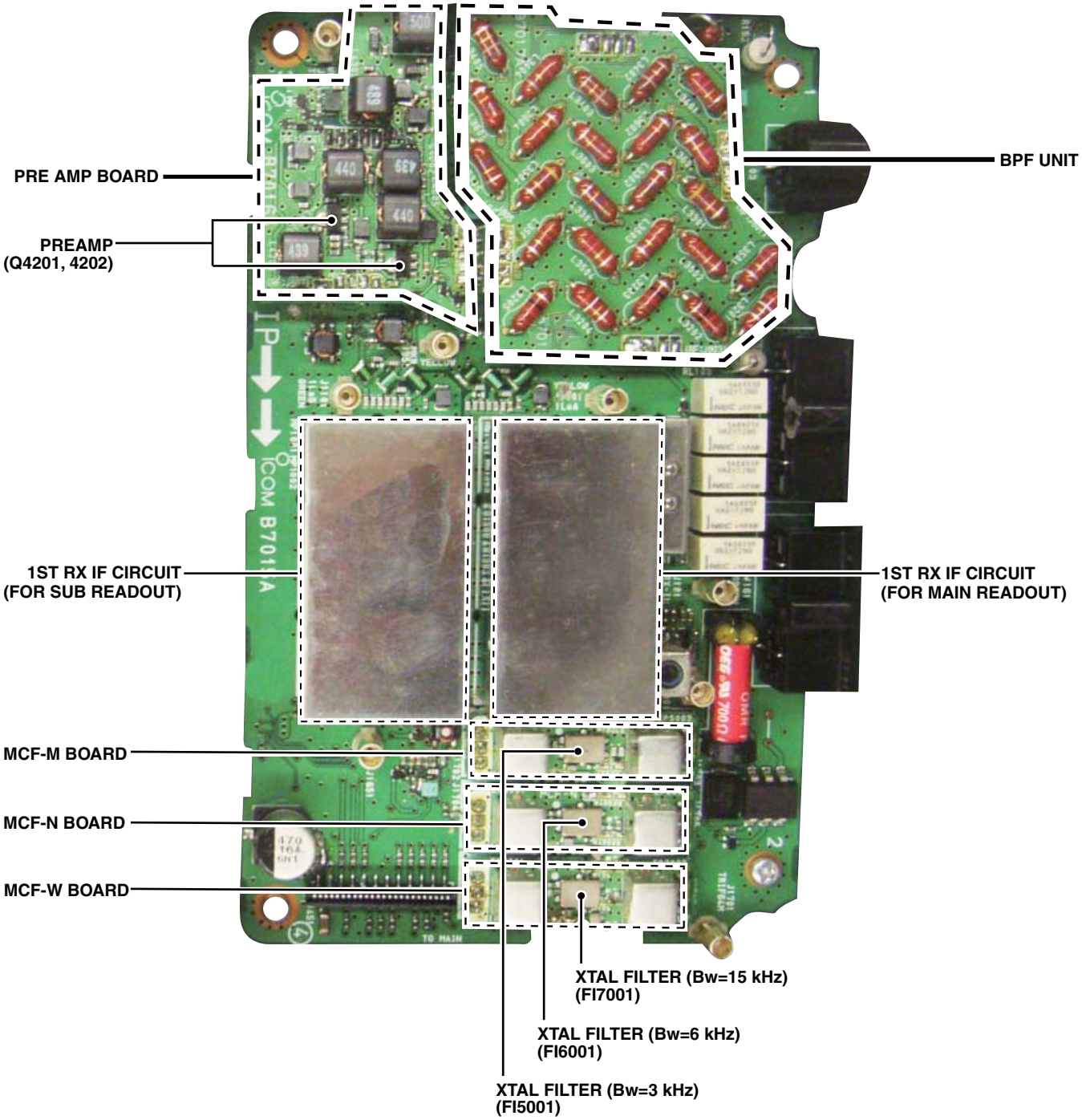
PRE AMP BOARD
PREAMP
(Q4201, 4202)
BPF UNIT
1ST RX IF CIRCUIT
(FOR SUB READOUT)
1ST RX IF CIRCUIT
(FOR MAIN READOUT)
MCF-M BOARD
MCF-N BOARD
MCF-W BOARD
XTAL FILTER (Bw=15 kHz)
(FI7001)
XTAL FILTER (Bw=6 kHz)
(FI6001)
XTAL FILTER (Bw=3 kHz)
(FI5001)

SECTION 3 CIRCUIT DESCRIPTION

3-1 RECEIVER CIRCUITS

ANTENNA SWITCHING CIRCUIT AND ANTENNA MATCHING CIRCUITS (CTRL AND TUNER UNITS)

RX signals from the antenna connector; [ANT1] (J5) or [ANT2] (J6) are passed through the antenna switch (RL101) and current detector (D81), and applied to the RF UNIT via the tuner switches (RL104 and RL105), RX line switch (RL103) and LPF.

If the automatic antenna tuning function is activated, the RX signals from the current detection circuit (D81, 301, 302) are applied to the antenna tuning network on the TUNER UNIT to match the transceiver to the connected antenna automatically.

The RX signals from the TUNER UNIT are applied to the RF UNIT via the RX line switch (RL103) and LPF.

ATTENUATOR CIRCUITS (RF UNIT)

The RX signals from the CTRL UNIT are passed through the RECEIVE ANTENNA IN/OUT CONNECTOR switches (RL104, 105) and RX line cut switch (RL101), then passed through or bypassed the attenuator circuits, according to the setting.

The combination of attenuator (or bypass) that the RX signals are passed through determines the entire attenuation level; 0 dB, 6 dB, 12 dB or 18 dB.

The RX signals which are passed though or bypassed the attenuator circuits are applied to the BPF circuits.

BPF CIRCUITS (RF UNIT AND BPF BOARD)

The RX signals from the attenuator circuits are passed through an LPF or one of BPFs correspond to the operating frequency, to remove unwanted out-of-band signals.

The table below shows filter which the RX signals are passed in each frequency range.

Name of BPF	Frequency range	Located on
B0	0.03–1.599999 MHz	RF UNIT
B1	1.6–1.999999 MHz	BPF BOARD
B2	2.0–2.999999 MHz	BPF BOARD
B3	3.0–3.999999 MHz	BPF BOARD
B4	4.0–5.999999 MHz	BPF BOARD
B5	6.0–7.999999 MHz	BPF BOARD
B6	8–10.999999 MHz	RF UNIT
B7	11–14.999999 MHz	RF UNIT
B8	15–21.999999 MHz	RF UNIT
B9	22–29.999999 MHz	RF UNIT
B10 (for RX)	50–54 MHz	RF UNIT
B10W	30–49.999999 MHz 54.000001–59.999999 MHz	RF UNIT
B10TX (for TX)	50–54 MHz	RF UNIT

The filtered RX signals are applied to the PREAMP BOARD.

PREAMPLIFIERS (PREAMP BOARD)

The RX signals from the BPF circuits are applied to or bypassed the preamplifier.

When the PREAMP FUNCTION is activated, the RX signals are amplified by one of preamplifiers (Q4201, Q4202 or Q4203).

The amplified or bypassed RX signals are applied to the RF UNIT again.

• RF CIRCUITS

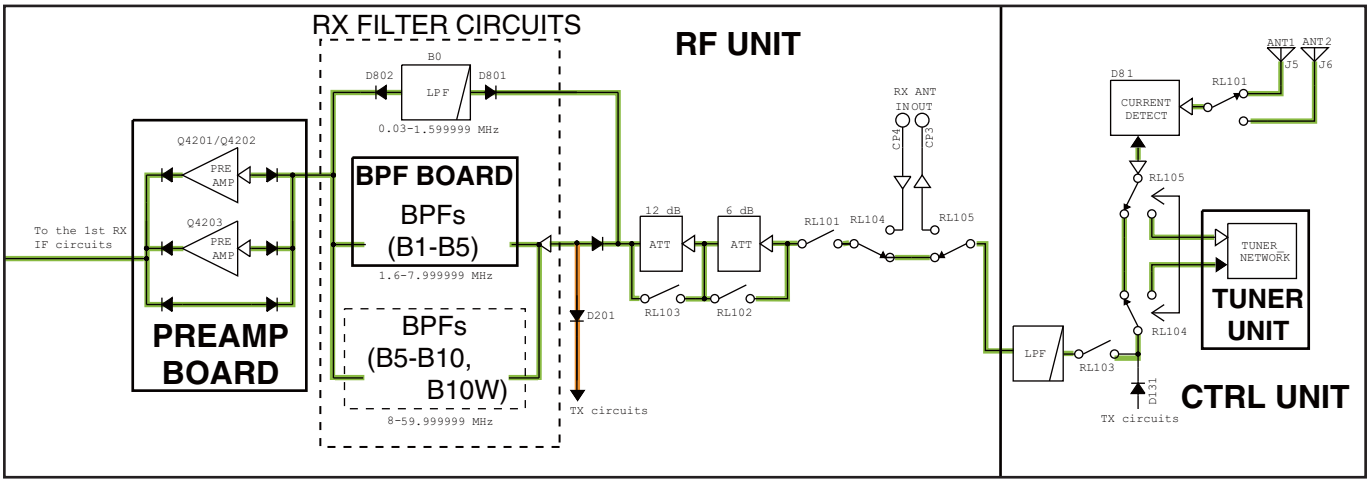

1ST RX IF CIRCUITS (RF UNIT)

The RX signals from the PREAMP BOARD are applied to the splitter (L904) to divide the received signals for dualwatch operation.

The separated RX signals are passed through the LPF which removes unwanted signals (60 MHz and higher), and amplified by the RF AMP (Main readout; Q1201, 1202/Sub readout; Q1001, 1002), then applied to the 1st RX IF mixer (Main readout; Q1203–1206/Sub readout; Q1003–1006).

The RX signals are converted into the 1st RX IF signal by being mixed with 1st RX LO signals (64.485–124.455 MHz) from the PLL UNIT.

The converted 1st RX IF signals are passed through the 2-staged attenuator (Main readout; D1201–1203/Sub readout; D1001–1003) which adjusts the balance of both 1st RX IF signals, and amplified by 1st RX IF AMP (Main readout; Q1208/Sub readout; Q1008).

These amplified 1st RX IF signals are combined by the hybrid combiner (L1018), and applied to the 1st IF filter circuits.

The combined 1st IF signal is passed through one of the 1st IF filters on the MCF-N/-M/-W BOARDS which has different passband widths. The filter to be passed through is according to the IF filter setting.

The filtered 1st RX IF signal is applied to the RF UNIT again, and passed through the LPF and amplified by the RX IF AMP (MAIN UNIT: 3601–3603).

The amplified 1st RX IF signal is then applied to the 2nd RX IF circuits.

• 1ST RX IF CIRCUITS

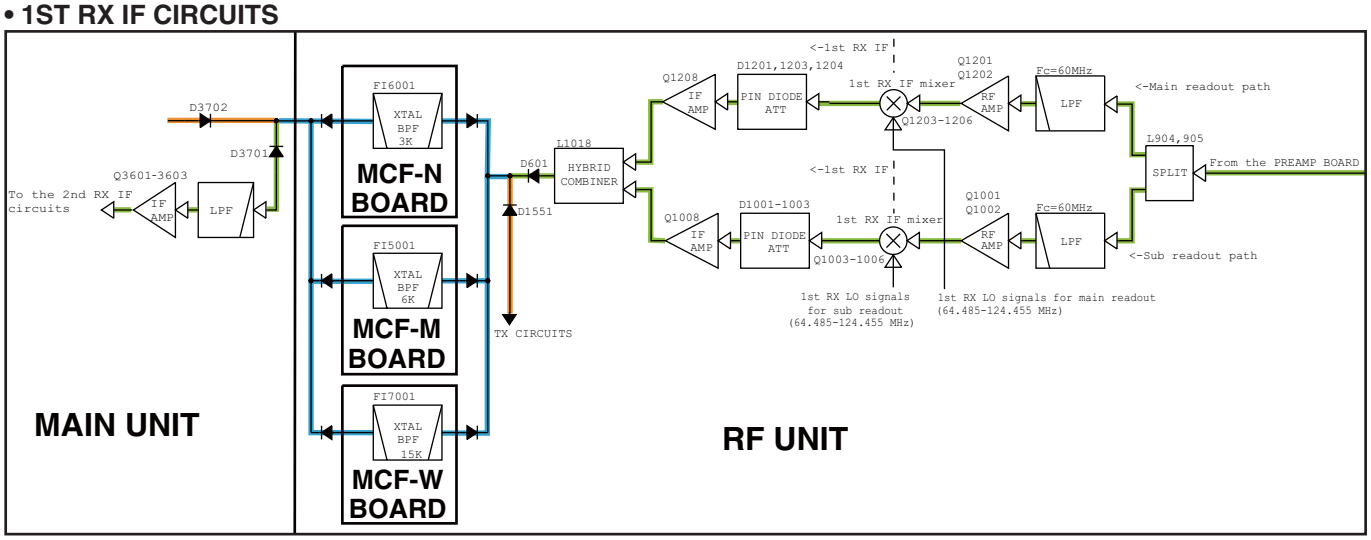

2ND RX IF CIRCUITS (MAIN UNIT)

The 1st RX IF signal from the 1st RX IF circuits is divided into two paths, and each signal is applied to the 2nd RX IF mixers (Image reduction mixer; D3202/D3201) to be converted into the 2nd RX IF signal, by being mixed with the 2nd RX LO signal (64.494 MHz) from the PLL UNIT.

The image reduction mixer removes image frequency components by using LO signals which are 90 degrees phase-shifted from each other.

The converted 2nd RX IF signals are amplified independently by the buffer (Q3202/Q3201) and IF AMP (IC3203).

These amplified 2nd RX IF signals are 90 degrees phase-shifted from each other by the phase shifter (IC3202; pins 8-10, pins 12–14). These phase-shifted 2nd RX IF signals are combined by the combiner (IC3202; pins 5–7) to be converted into the 3rd RX IF signal.

The converted 3rd RX IF signal is amplified by the 3rd IF AMP (IC3201), and passed through the limiter (IC3002) and balance-unbalance converter (Balun; IC4001/IC4002), then applied to the demodulator circuits.

DEMODULATOR CIRCUITS AND DSP (MAIN UNIT)

The 3rd RX IF signal from the 3rd RX IF circuits is applied to the A/D converter (IC4004) to be converted into the digital signal.

The converted digital signal is applied to the DSP (IC5001), and demodulated and processed.

The demodulated signal is applied to the D/A converter (IC4301) to be converted into the analog signal, then applied to the buffer amplifier (IC4401; pins 1–3).

The buffer amplified AF signals are applied to the RX AF circuits.

• 2ND RX IF, 3RD RX IF AND DEMODULATOR CIRCUITS

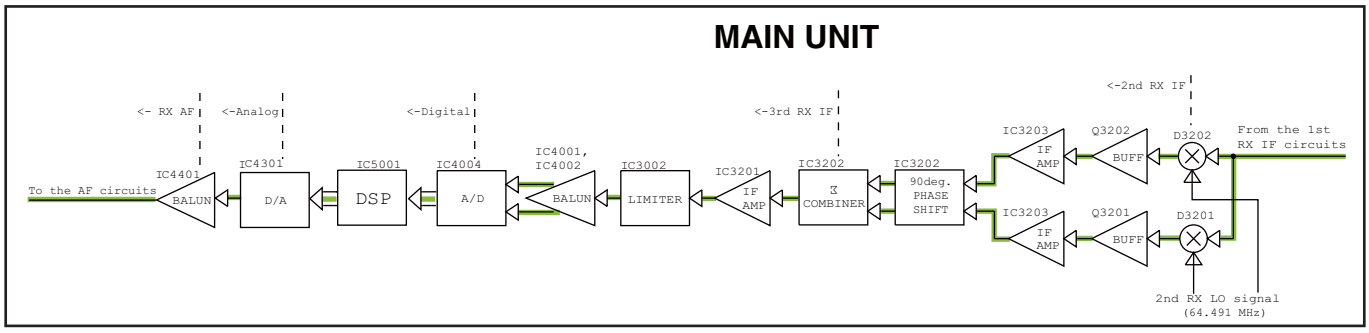

RX AF CIRCUITS (MAIN UNIT)

The AF signals from the buffer amplifier are applied to the AF AMP (IC2301) via the squelch gate (Q2361). The amplified AF signals are applied to the Voltage Controlled Amplifier (VCA; IC2231) to be adjusted its level (=audio output level).

The level-adjusted AF signals are applied to the AF power AMP (IC2312) via the LPF (Q2312).

The power-amplified AF signals are passed through the AF mute switch (RL2302), then applied to the internal speaker or external speaker jack (J2302) on the rear panel or headphone jack (JACK BORD J2) on the front panel.

• RX AF CIRCUITS

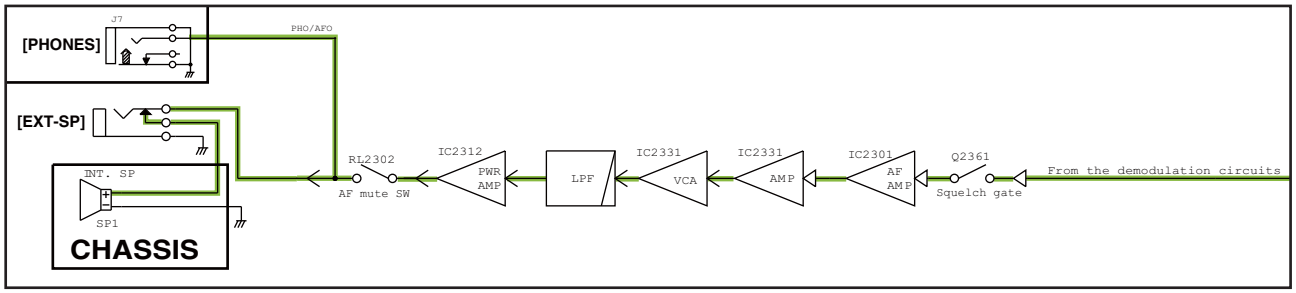

3-2 TRANSMITTER CIRCUITS

TX AF CIRCUITS (MAIN UNIT)

The audio signals from the microphone (MIC signals) are applied to the MAIN UNIT via the MICROPHONE CONNECTOR (MIC BOARD; J1), and applied to the Voltage Controlled Amplifier (VCA; IC2601).

The applied MIC signals are amplified by internal MIC AMP, and adjusted its level (=MIC gain) by internal VCA circuit.

The level-adjusted MIC signals are passed through the MIC line selector (IC4101), and amplified by the AF AMP (IC4205), then applied to the modulation circuits.

The signals from the external equipment connected to the accessory socket [ACC1] on the rear panel, are directly applied to the AF AMP (IC4205) via the MIC line selector (IC4101).

The amplified MIC signals are applied to the modulation circuits.

MODULATION CIRCUITS AND DSP (MAIN UNIT)

The MIC signals from the TX AF circuits are applied to the Balance-Unbalance converter (Balun; IC4201, 4204), and the converted MIC signals are applied to the A/D converter (IC4301) to be converted into the digital signal.

The converted digital signal is applied to the DSP (IC5001) and modulated and processed.

The modulated signal is converted into the analog signal by the D/A converter (IC4301), and passed through the balun (IC4401) to be converted into the 3rd TX IF signal.

The converted 3rd TX IF signal is applied to the 3rd TX IF circuits.

• TX AF AND MODULATION CIRCUITS

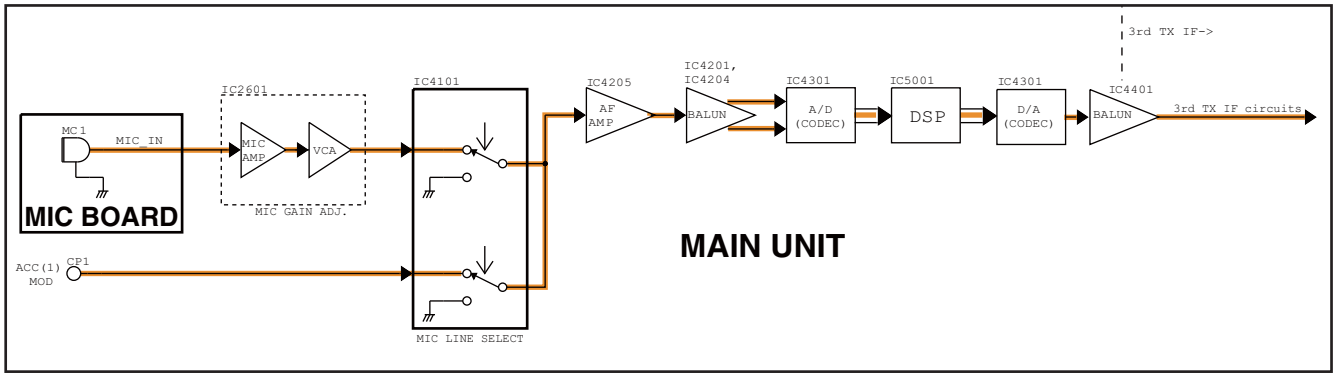

3RD TX IF AND 2ND TX IF CIRCUITS (MAIN UNIT)

The 3rd TX IF signal from the modulation circuits is applied to the 3rd TX mixer (IC3402) via the LPF (IC3401) to be converted into the 2nd TX IF signal, by being mixed with the 3rd TX LO signal from the PLL UNIT. The converted 2nd TX IF signal is amplified by the IF AMP (Q3501), passed though the one of 2nd TX filters (FI3501; for FM, AM mode or FI3502; for SSB, CW, RTTY, PSK mode) via the filter switches (IC3501 and IC3502).

The filtered 2nd TX IF signal is amplified by the 2nd TX IF AMP (Q3504), and applied to the 2nd TX mixer (D3703) via the attenuator to be converted into the 1st TX IF signal, by being mixed with the 2nd TX LO signal from the PLL UNIT.

The converted 1st TX IF signal is applied to the 1st TX IF circuits on the RF UNIT via the attenuator and IF switch (D3702).

• 3RD AND 2ND TX IF CIRCUITS

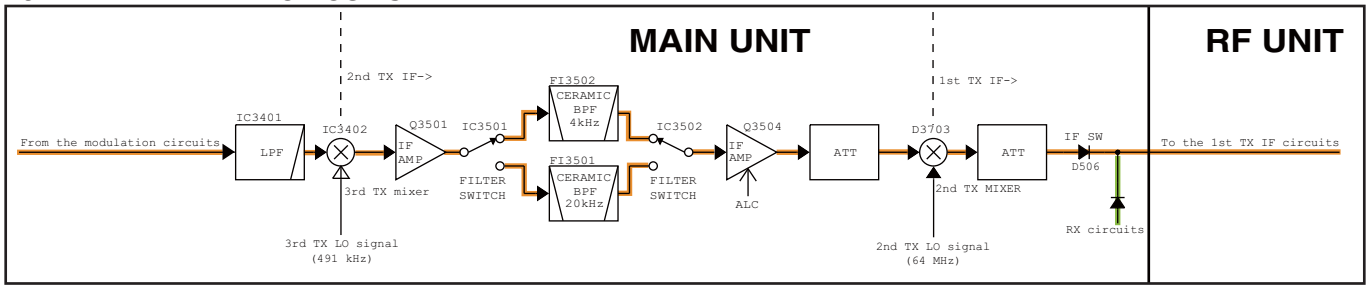

1ST TX IF CIRCUITS (RF UNIT AND MCF-W BOARD)

The 1st TX IF signal from the 2nd TX IF circuits is passed through the 1st TX IF filter (MCF-W BOARD; FI7001) to remove unwanted signals in wide bandwidth. The filtered 1st TX IF signal is passed through the TX/RX switch (D1551), amplified by the IF AMP (Q1551), and applied to the 1st TX mixer (D1451) via the LPF to be converted into the TX signal (TX frequency itself), by being mixed with the 1st TX LO signals from the PLL UNIT.

The converted TX signal is passed through the LPF, and amplified by the RF AMP (IC1401), then applied to the BPF circuits via the attenuator.

BPF CIRCUITS

The TX signal from the 1st TX IF circuits is passed through an LPF or one of BPFs according to the transmitting frequency, to remove unwanted signals contained in the TX signal.

Refer to the table on page 4-1 for the filter which the TX signal is passed through.

The filtered TX signal is applied to the TX amplifier circuits via the HPF and TX line switch (D201).

• 1ST TX IF CIRCUITS

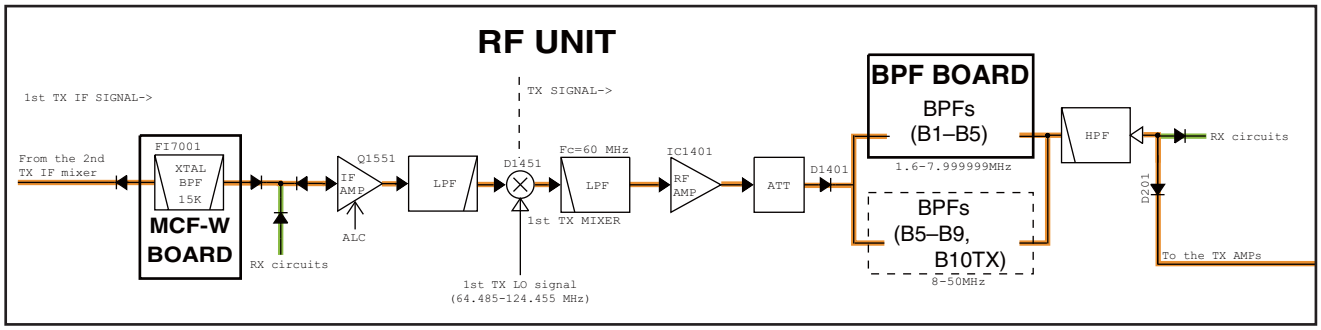

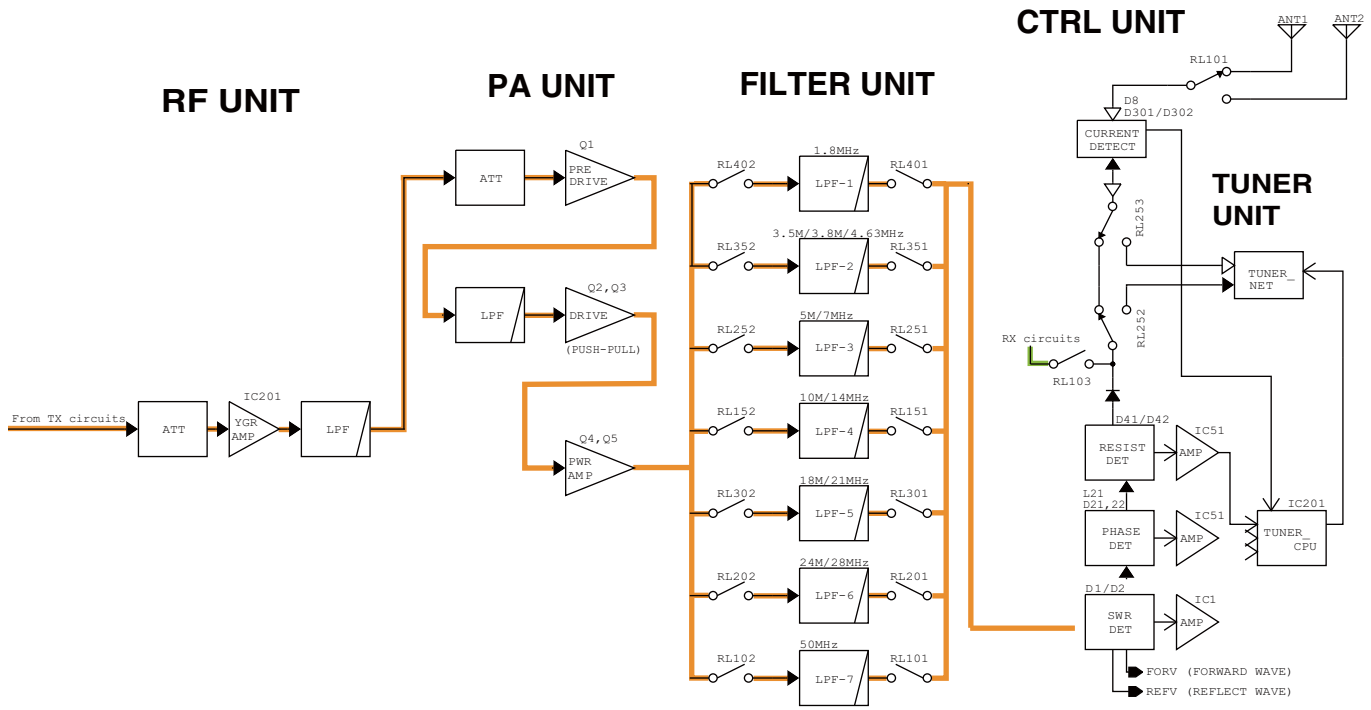
RF UNIT
PA UNIT
FILTER UNIT
CTRL UNIT
TUNER UNIT
From TX circuits
ATT
IC201
YGR AMP
LPF
ATT
Q1
PRE DRIVE
LPF
Q2,Q3
DRIVE
(PUSH-PULL)
Q4,Q5
PWR AMP
RL402
1.8MHz
LPF-1
RL401
RL352
3.5M/3.8M/4.63MHz
LPF-2
RL351
RL252
5M/7MHz
LPF-3
RL251
RL152
10M/14MHz
LPF-4
RL151
RL302
18M/21MHz
LPF-5
RL301
RL202
24M/28MHz
LPF-6
RL201
RL102
50MHz
LPF-7
RL101
ANT1
ANT2
RL101
D8
D301/D302
CURRENT DETECT
RL253
RL252
TUNER NET
RX circuits
RL103
D41/D42
RESIST DET
IC51
AMP
L21
D21,22
PHASE DET
IC51
AMP
IC201
TUNER CPU
D1/D2
SWR DET
IC1
AMP
FORV (FORWARD WAVE)
REFV (REFLECT WAVE)

3-3 FREQUENCY SYNTHESIZER (PLL UNIT)

REFERENCE FREQUENCY OSCILLATOR CIRCUIT

The crystal oscillator (X51) oscillates the 32 MHz reference frequency signal. This reference signal is applied to the Local Oscillator (LO) circuits via the buffer (Q51) and LPF (L53, C55–57).

2ND TX LO CIRCUIT

The 32 MHz reference signal from the reference frequency oscillator circuit is doubled by the doubler (Q61) and passed through the double-tuned filter (L61, 62) to extract the 64 MHz of 2nd harmonic component. The extracted 64 MHz signal is applied to the RF UNIT via the buffer (Q71) and the BPF as the 2nd TX LO signal.

3RD TX LO CIRCUIT

Using the 32 MHz reference clock signal from the reference frequency oscillator circuit, the 491 kHz 3rd TX LO signal is directly generated by 10-bit DDS (IC701) and D/A converter (R701–720). The generated 491 kHz signal is passed through the BPF and amplified by Q702, then applied to the RF UNIT.

The generated 491 kHz signal from Q702 is also used to generate the 2nd RX LO signal, by being applied to the 2nd RX LO circuit.

2ND RX LO CIRCUIT

The 64 MHz reference signal from the double-tuned filter (L61, 62) and the 491 kHz signal from the 3rd TX LO circuit is mixed by the 2nd RX LO mixer (D821, L821, 822), to generate the 2nd RX LO signal.

The generated 2nd RX LO signal is filtered by the crystal filter (FI831) and amplified by Q831, then applied to the RF UNIT as the 2nd RX LO signal.

1ST RX (Main readout)/TX LO CIRCUITS

The 32 MHz reference signal from the reference frequency oscillator circuit is amplified by Q152, and applied to the DDS (IC101) as the reference clock signal. The DDS (IC101) generates the PLL reference frequency signal, using applied reference clock signal.

The generated PLL reference frequency signal is filtered by the ceramic BPF (FI101) and LPF, amplified by Q151, then applied to the PLL IC (IC381) vian LPF as the main loop reference frequency signal.

The reference frequency signal is used for phase comparison of oscillating signals from the VCO-A (Q201, 221, 251, 271). The resulting signal of phase comparison is converted into the lock voltage which controls the oscillation frequency of VCO-A (Q201, 221, 251, 271), by being passed through the passive loop filter.

The output signals of the VCO-A (Q201, 221, 251, 271) are buffer-amplified by Q301, filtered by the BPF, and amplified by IC320, then filtered by the LPF for harmonic removal.

The filtered VCO output signals are passed through the BPF and LO mute switch (Q361, D361, 362), then applied to the RF UNIT as the 1st RX LO (for Main readout)/TX LO signals.

A portion of VCO output signals from the LPF are fed back to the PLL (IC381) for the phase-locked loop.

VCOs (VCO-A)

Q201, Q221, Q251 and Q271 compose four oscillators, and each VCO generates the 1st RX/TX LO signals. These VCO employ high "Q" components as resonator (L202, 222, 252, 272) for high C/N characteristic and wide oscillation frequency range.

The table below shows the oscillation frequency range of VCO-A and the RX frequency range.

Composed by	RX Frequency range	Oscillation frequency range (1st LO)
Q271	0.03–7.999999 MHz	64.485–72.454999 MHz
Q251	8–19.999999 MHz	72.455–84.454999 MHz
Q221	20–44.999999 MHz	84.455–109.454999 MHz
Q201	45–60 MHz	109.455–124.455 MHz

1ST RX (Sub readout) LO CIRCUITS (SUB LOOP)

The 32 MHz reference signal from the reference frequency oscillator circuit is amplified to the C-MOS level by Q403, and applied to the DDS (IC403) as the reference clock signal.

The DDS (IC403) generates the DDS reference frequency signal by using the reference clock signal. The DDS reference frequency signal is converted its waveform by the D/A converter (R401–424), filtered by FI401 to remove unwanted components, and amplified to C-MOS level by IC402, then applied to the phase comparator of DDS (IC403).

The applied DDS reference frequency signal is used for the phase comparison of oscillating signal from the SUB LOOP VCO (Q451). The resulting signal of phase comparison is converted into the lock voltage which controls the oscillation frequency of SUB LOOP VCO (Q451), by being passed through the passive loop filter.

The output signal of SUB LOOP VCO (Q451) is amplified by the buffer (Q452), and applied to the PLL IC (IC681) as the PLL reference frequency signal.

A portion of sub loop VCO (Q451) is applied to the phase comparator of DDS (IC403) via the splitter (R459–461) and AMP (Q402), for the phase-locked loop.

1ST RX (Sub readout) LO CIRCUITS (MAIN LOOP)

The applied PLL reference frequency signal is used for the phase comparison of oscillating signal from the VCO-B (Q501, 521, 551, 571). The resulting signal of phase comparison is converted into the lock voltage which controls the oscillation frequency of VCO-B (Q501, 521, 551, 571), by being passed through the passive loop filter.

The output signals of the VCO-B (Q501, 521, 551, 571) are buffer-amplified by Q601, filtered by the BPF, and amplified by IC620, then filtered by the LPF for harmonic removal. The filtered VCO output signals are passed through the BPF and LO mute switch (Q661, D661, 662), then applied to the RF UNIT as the 1st RX LO (for Sub readout) signals.

A portion of VCO output signals from the LPF are fed back to the PLL (IC681) for the phase-locked loop.

VCOs (VCO-B)

Q501, Q521, Q551 and Q571 compose four oscillators, and each VCO generates the 1st RX LO signals. These VCO employ high "Q" components as resonator (L502, 522, 552, 572) for high C/N characteristic and wide oscillation frequency range.

The table below shows the oscillation frequency range of VCO-B and the RX frequency range.

Composed by	RX Frequency range	Oscillation frequency range (1st LO)
Q571	0.03–7.999999 MHz	64.485–72.454999 MHz
Q551	8–19.999999 MHz	72.455–84.454999 MHz
Q521	20–44.999999 MHz	84.455–109.454999 MHz
Q501	45–60 MHz	109.455–124.455 MHz

• FREQUENCY SYNTHESIZER CIRCUITS

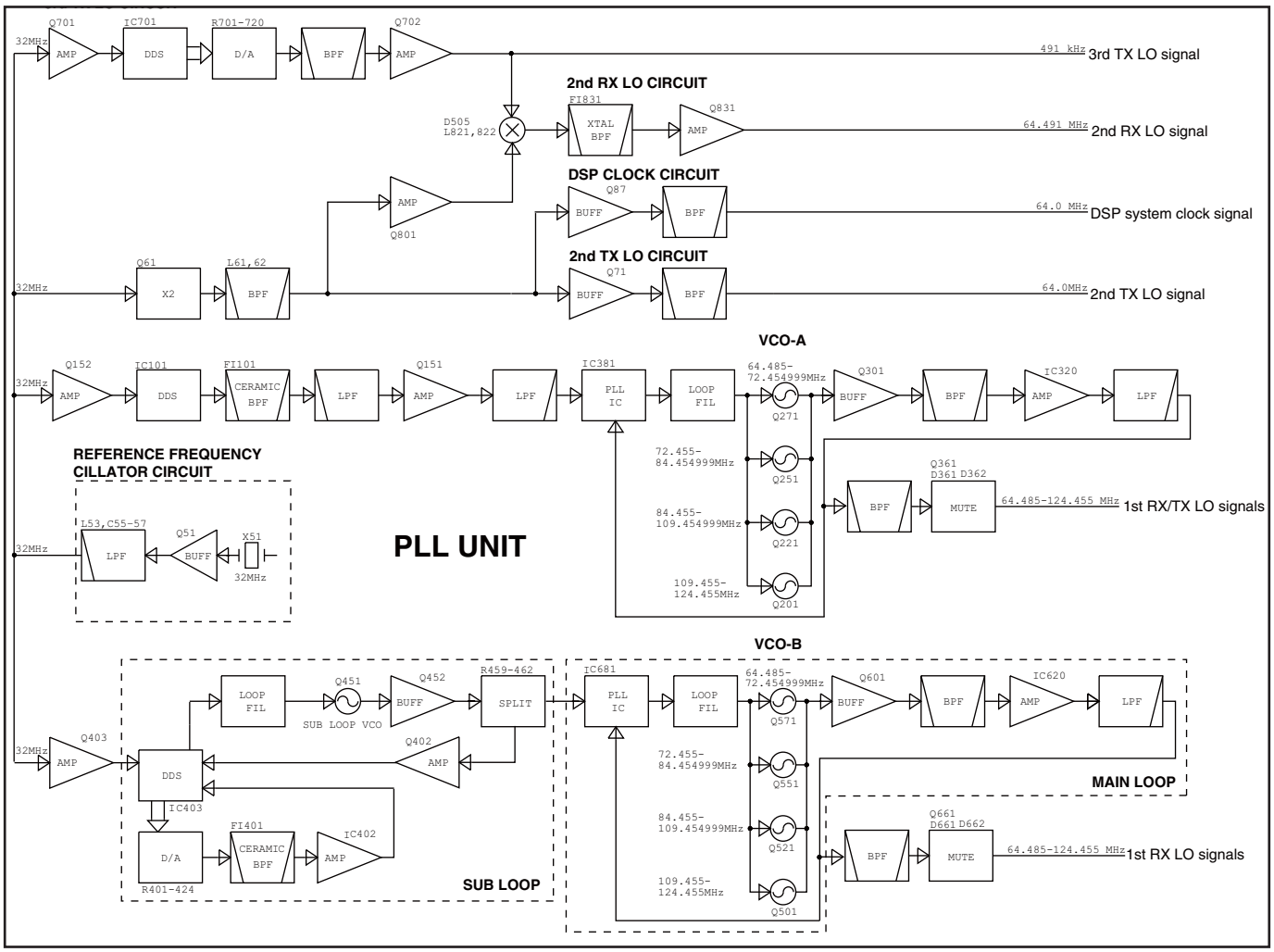

3-4 VOLTAGE BLOCK DIAGRAM

Voltage from the power supply is routed to the whole of the transceiver via regulators and switches.

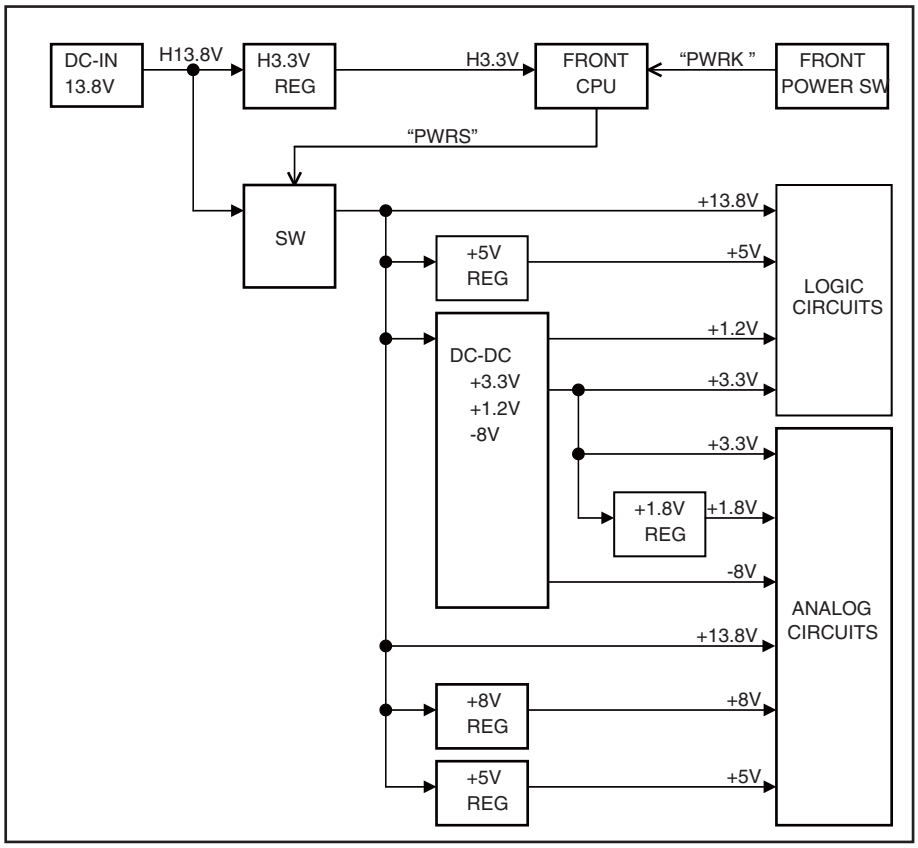

3-5 CPU PORT ALLOCATIONS

• MAIN CPU (LOGIC UNIT: IC604)

Pin No.	Line Name	Description	I/O
5–20	H8_A0–H8_A13	DSP address bus.	O
21	UNLKA	PLL unlock detect signal input for VCO-A. H=Unlock detected.	I
22	UNLKB	PLL unlock detect signal input for VCO-B. H=Unlock detected.	I
23	ECK	EEPRROM (HN58X2464TI) clock.	O
24	EDT	EEPRROM (HN58X2464TI) data.	I/O
26	USCK	USB HUB (USB2502) clock.	O
27	USDA	USB HUB (USB2502) data.	O
28	UPWS	USB HUB (USB2502) power control. H=USB power ON.	O
29	VBUS	VBUS connection detect for USB HUB (USB2502). H=USB connection detected.	I
30	RTKI	RTTY keying input. H="Space" input.	I
31	TRVI	Transverter input (from [ACC2]). L=A transverter is connected.	I
33	SDAT	Scope DDS/PLL/DSP data.	O
34	SST2	Scope PLL(ADF4630-8) strobe.	O
35	EXRL1	External SEND reray output. H=Relay ON	O
36	EXRL2	External SEND reray output. H=Relay ON	O
37	H8_CS6#	Dual-port SRAM chip select signal. L=Selected.	O
38	H8_CS7#	Expander chip select signal. L=Selected.	O
42	PCK/CON0	DDS clock.	O
43	PDAT/CON1	DDS data.	O
44	CON2	DDS mode control.	O
45	PSL	PLL strobe.	O
46	METV	External meter voltage. (PWM, 7800 Hz, 12 bit resolution)	O
47	PST	PLL strobe output.	O
48	ESTA	External tuner "START" signal output. L=Tuning start.	O
49	EKEY	External tuner "KEY" signal input. L=While tuning/tune NG.	I
51	MCK	Scope PLL clock.	O
52	MDAT	Scope PLL data.	O
53	TCON	External tuner conection detect.	I
54	CTXD	CI-V (UART) output.	O
55	CRXD/CBSY	CI-V (UART) input/CI-V bus busy input. L=Data "1" /Busy.	I
56	DSPCK	DSP clock.	O
57	DSPR	DSP data.	O
59	SST1	Chip select signal for scope DDS (AD9834). L=Selected.	O
60	SPS0	Scope DDS (AD9834) frequency register shift signal.	O
61	SCK	Scope DDS/PLL/DSP clock.	O
63-80	H8_D0-H8_D15	DSP data bus.	I/O
81	RTD	DSP RTTY/BPSK/QPSK (H) decode data.	I
82	TND	QPSK (L) decode data.	I

Pin No.	Line Name	Description	I/O
83	NSQ	Input noise pulse.	I
84	H8_WAIT#	Bus control "Wait" signal.	I
85	TRAS	SEND signal.	O
87	H8_LWR#	(Bus control) "L" write signal. L=While writing.	O
88	H8_HWR#	(Bus control) "H" write signal. L=While writing.	O
89	H8_RD#	(Bus control) Read signal. L=While reading.	O
90	H8_AS#	(Bus control) Adress strobe.	O
94	SENI	PTT/ACC SEND signal. H=While transmitting.	I
104	CTFL	CW TX status.	I
105	RXS	RX circuits power ON. L=While receiving.	O
106	TXS	TX circuits power ON. L=While transmitting.	O
107	SQS	Squelch signal For [ACC1]. H=While the squelch is open.	O
108	USQLS	For USB audio squelch (for RX AF mute). L=While the squelch is open.	O
109	SQLS	Squelch signal (for RX AF mute). L=While the squelch is open.	O
113	FORL	Forward wave detect voltage. (A/D)	I
114	REFL	Reflected wave detect voltage. (A/D)	I
115	ALCL	ALC meter voltage input. (A/D)	I
116	IDL	Drive AMP current (ID) detect voltage. (A/D)	I
117	VDL	Drive AMP voltage (VD). (A/D)	I
118	THML	Temperature detect voltage from the thermal sensor on the PA UNIT. (A/D)	I
119	SKYS	Straight key/electronic keyer input. (A/D) L=Key down.	I
120	AVXL	AF signals peak level detect. (A/D)	I
121	DX1	TX/RX DSP data.	I
122	SHSK0	Hand shake signal for Scope DSP. H=Data output enable.	I
123	SHSK1	Firm-up command for Scope DSP.	I
124	DX1S	Scope DSP data.	I
125	UNLKS	Scope PLL (ADF4630) unlock detect signal. L=Unlock detected.	I
126	THRI	Internal tuner through signal. H=Tuner through.	I
133	LTXD	Data output (UART) for the communication with front CPU.	O
134	LRXD	Data input (UART) for the communication with front CPU.	I
135	DSKY	DSP CW/RTTY keying signal. L=Key down/space.	O
137	PWRS	Transceiver power ON/OFF control. H=Power ON.	O
140	IKEY	Internal tuner "KEY" input (UART). L=Tuner ON.	I
142	ISTA	Internal tuner "START" signal (UART).	O

• FRONT CPU (LOGIC UNIT: IC101)

Pin No.	Line Name	Description	I/O
1	CNTV	TFT contrast control. (D/A) (1–2.3 V)	O
2	PWRD	POWER LED control. (0 V=Light OFF, 3.3 V=Light ON.)	O
3	LDAT	Expander (BU2099) data.	O
4	LST	Expander (BU2099) strobe.	O
5	RTCCK	Expander (BU2099) clock.	O
8	RTCCE	Clock IC (RX-4581) chip enable.	O
9	MOND	[MONITOR] LED control signal.	O
16	RTCIRQ	Clock IC (RX-4581) interlude control.	I
19	RSB	RIT dial (24x4 pulses) phase-B input.	I
20	RSA	RIT dial (24x4 pulses) phase-A input.	I
21	MSB	Main dial (250x4 pulses) phase-B input.	I
22	MSA	Main dial (250x4 pulses) phase-A input.	I
23	TMD	Timer LED control. H=Light ON.	O
24	LEDV	LED brightness control. (PWM, 600 Hz)	O
25	BKLS	LCD backlight ON/OFF. H=Backlight ON.	O
26	CFLV	CFL backlight brightness control. (PWM, 600 Hz)	O
28	PHNI	Headphone connection detect. H=Connection detected.	I
29	DTXD	Falsh read data.	O
30	DRXD	Flash write data.	I
31	SLOS	Flash write clock. H=While writing.	O
32	DBP1	Flash write "BUSY."	O
33	LTXD	Data output (UART) for the communication with main CPU.	O
34	LRXD	Data input (UART) for the communication with main CPU.	I
35	DOTK	Ele-key input. (Dot)	I
36	DSHK	Ele-key input. (Dash)	I
37	SQSS	Squelch signal to the [MICROPHONE JACK]. H=Squelch open.	O
38	RTCDT	Clock IC (RX-4581) data.	I/O
40	TRAK	[TRANSMIT] input. (Pull-up)	I
41	F1K	[F-1] input. (Pull-up)	I
42	F2K	[F-2] input. (Pull-up)	I
43	F3K	[F-3] input. (Pull-up)	I
44	LOE	Expander (BU2099) output enable.	O
45	F4K	[F-4] input. (Pull-up)	I
46	F5K	[F-5] input. (Pull-up)	I
47	F6K	[F-6] input. (Pull-up)	I
49	SSBK	[SSB] input. (Pull-up)	I
50	CWK	[CW] input. (Pull-up)	I
51	RTYK	[RTTY/PSK] input. (Pull-up)	I
52	AMK	[AM/FM] input. (Pull-up)	I
53	FILK	[FILTER] input. (Pull-up)	I
55	EXTK	[EXIT/SET] input. (Pull-up)	I
56	PLYK	[PLAY key input. (Pull-up)	I
57	RECK	[REC] input. (Pull-up)	I
58	XFCK	[XFC] input. (Pull-up)	I
65	MPRK	[MP-R] input. (Pull-up)	I
66	MWK	[MW] input. (Pull-up)	I
67	UPK	[▲] input. (Pull-up)	I

Pin No.	Line Name	Description	I/O
68	DWK	[▼] input. (Pull-up)	I
69	MPWK	[MP-W] input. (Pull-up)	I
70	VMK	[V/M] input. (Pull-up)	I
71	ATK	[AUTO TUNE] input. (Pull-up)	I
72	TSK	[TS] input. (Pull-up)	I
73	PWRK	[POWER] input. (Pull-up)	I
76	FPWRS	Analog circuit control signal. H=Transceiver power ON.	I/O
83, 84	PB2B, PB2A	Input ports for [PBT2] (outer control).	I
85, 86	PB1B, PB1A	Input ports for [PBT1] (inner control).	I
87	LG_RES	Logic circuits reset signal. H=Reset.	O
88	LG_ PWR	Logic circuits power control signal. H=Transceiver power ON.	O
89	MUDL	[MIC GAIN] input. (A/D)	I
90	AS4	Voltage from the analog SW (CD4501). (A/D) (0–3.3 V)	I
91	AS3	Voltage from the analog SW (CD4501). (A/D) (0–3.3 V)	I
93	AS1	Voltage from the analog SW (CD4501). (A/D) (0–3.3 V)	I
98	ASL2	Analog SW (CD4501) control signal.	O
99	ASL1	Analog SW (CD4501) control signal.	O
100	ASL0	Analog SW (CD4501) control signal.	O

SECTION 4 ADJUSTMENT PROCEDURE

4-1 PREPARATION

■ REQUIRED EQUIPMENTS

EQUIPMENT	GRADE AND RANGE	EQUIPMENT	GRADE AND RANGE	
Short plug	Modified 3.5 mm (1/8”) monoral plug (See the illust on the page 4-17)	Audio generator (AG)	Frequency range Output level	: 300–3000 Hz : 1–500 mV
RF voltmeter (50 Ω terminated)	Measuring range : 20–200 mV Frequency range : 0.1–50 MHz	AC Millivoltmeter	Measuring range	: 10 mV to 10 V
RF power meter (50 Ω terminated)	Measuring range : 5–120 W Frequency range : 0.1–50 MHz SWR : Less than 1.2 : 1	Digital multimeter	Measuring range Input impedance	: 0–10 V (Voltage) 1–30 A (Current) : More than 50 kΩ
Frequency counter	Frequency range : 0.1–100 MHz Frequency accuracy : ±1 ppm or better Input level : Less than 1 mW	External speaker	Input impedance Capacity	: 8 Ω : More than 2 W
Standard signal generator (SSG)	Frequency range : 0.1–100 MHz Output level : 0.1 mV to 32 mV (–127 to –17 dBm)	Spectrum Analyzer	Frequency range Bandwidth	: At least 90 MHz : 100 kHz
		Dummy Loads	Impedance	: 50 Ω/120 W and 100 Ω/120 W

■ REMOVING COVERS

Some adjustments require removal the covers to expose PCB.

CAUTION: Turn the power OFF and disconnect the DC power cable from the transceiver before performing any work on the transceiver. Otherwise, there is danger of electric shock and/or equipment damage.

① Remove the two screws from the carrying handle and remove the handle from the transceiver.
② Remove the 6 screws from the top of the transceiver and the 4 screws from the sides, then lift up the top cover.
③ Turn the transceiver upside-down.

CAUTION: NEVER HOLD THE MAIN DIAL OR ANY OTHER KNOBS when the transceiver is being turned upside down. This may damage the transceiver.

④ Remove 6 screws from the bottom, then lift up the bottom cover.
⑤ Remove the 11 screws, and disconnect the speaker cable, then remove the top shielding plate. <fig.1>
⑥ Remove the 6 screws, then remove the bottom shielding plate. <fig.2>

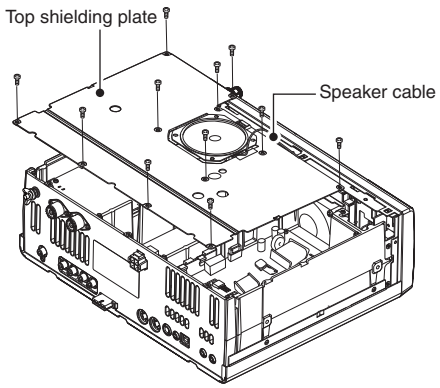

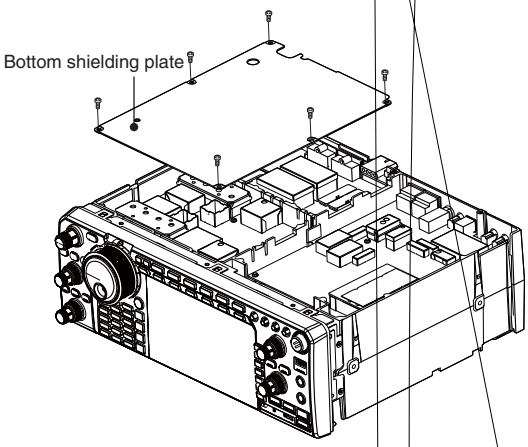

4-2 REFERENCE FREQUENCY SIGNAL LEVEL ADJUSTMENT

ADJUSTMENT		ADJUSTMENT CONDITION	OPERATION	ADJUSTMENT POINT	VALUE
REFERENCE FREQUENCY SIGNAL LEVEL	1	• Receiving	1) Connect a RF Voltmeter to **J81**. 2) Adjust the reference frequency signal level.	L61, L62 (repeatedly)	Maximum level

<Viewing from the BOTTOM side>

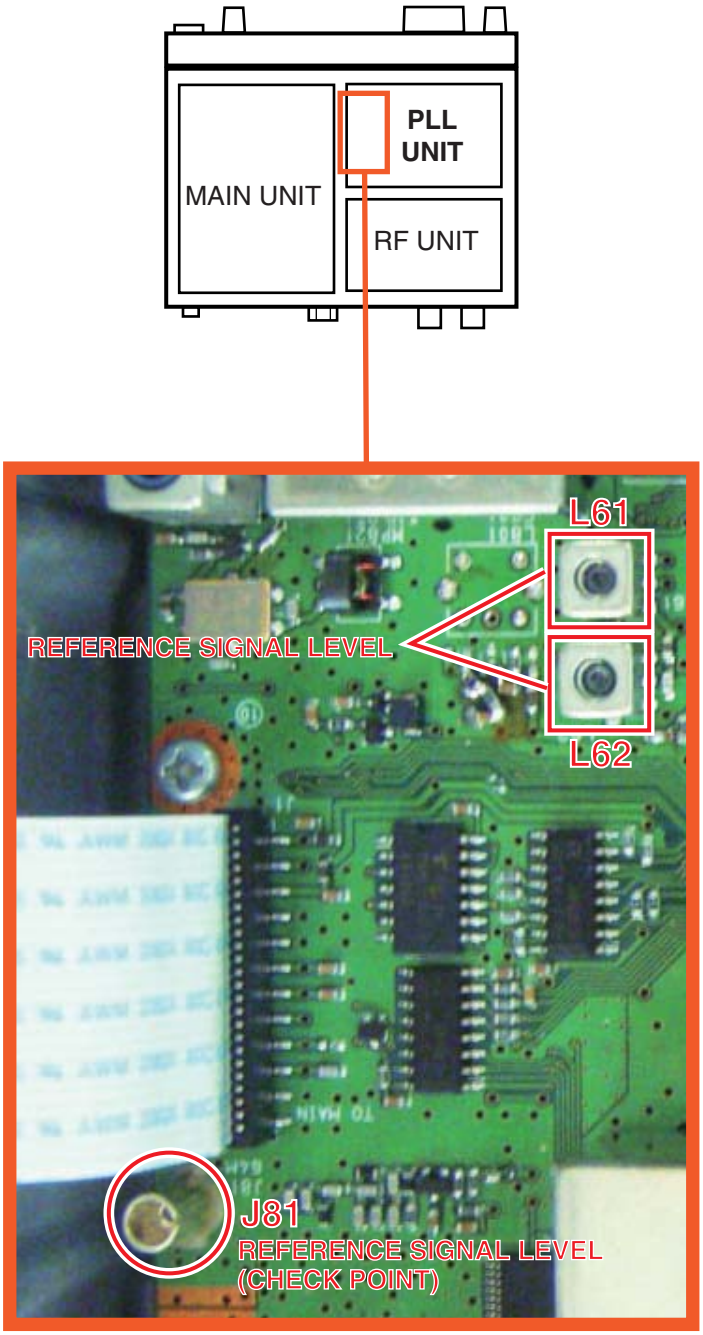

4-3 PLL UNIT ADJUSTMENT

ADJUSTMENT		ADJUSTMENT CONDITION	OPERATION	ADJUSTMENT POINT	VALUE
VCO-A LOCK VOLTAGE	1	• Frequency : 7.999999 MHz • Mode : USB • Receiving	1) Connect a Digital multimeter to **CP301**. 2) Adjust the lock voltage.	C278	4.3 V (4.2–4.4 V)
	2	• Frequency : 19.999999 MHz • Mode : USB • Receiving		C258	
	3	• Frequency : 44.9999999 MHz • Mode : USB • Receiving		C228	
	4	• Frequency : 60.000000 MHz • Mode : USB • Receiving		C208	

<Viewing from the BOTTOM side>

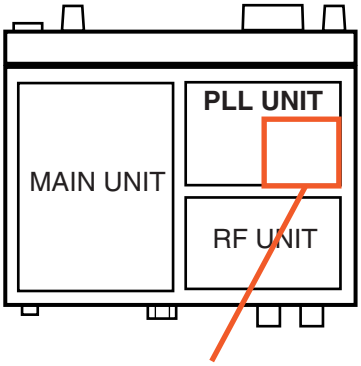

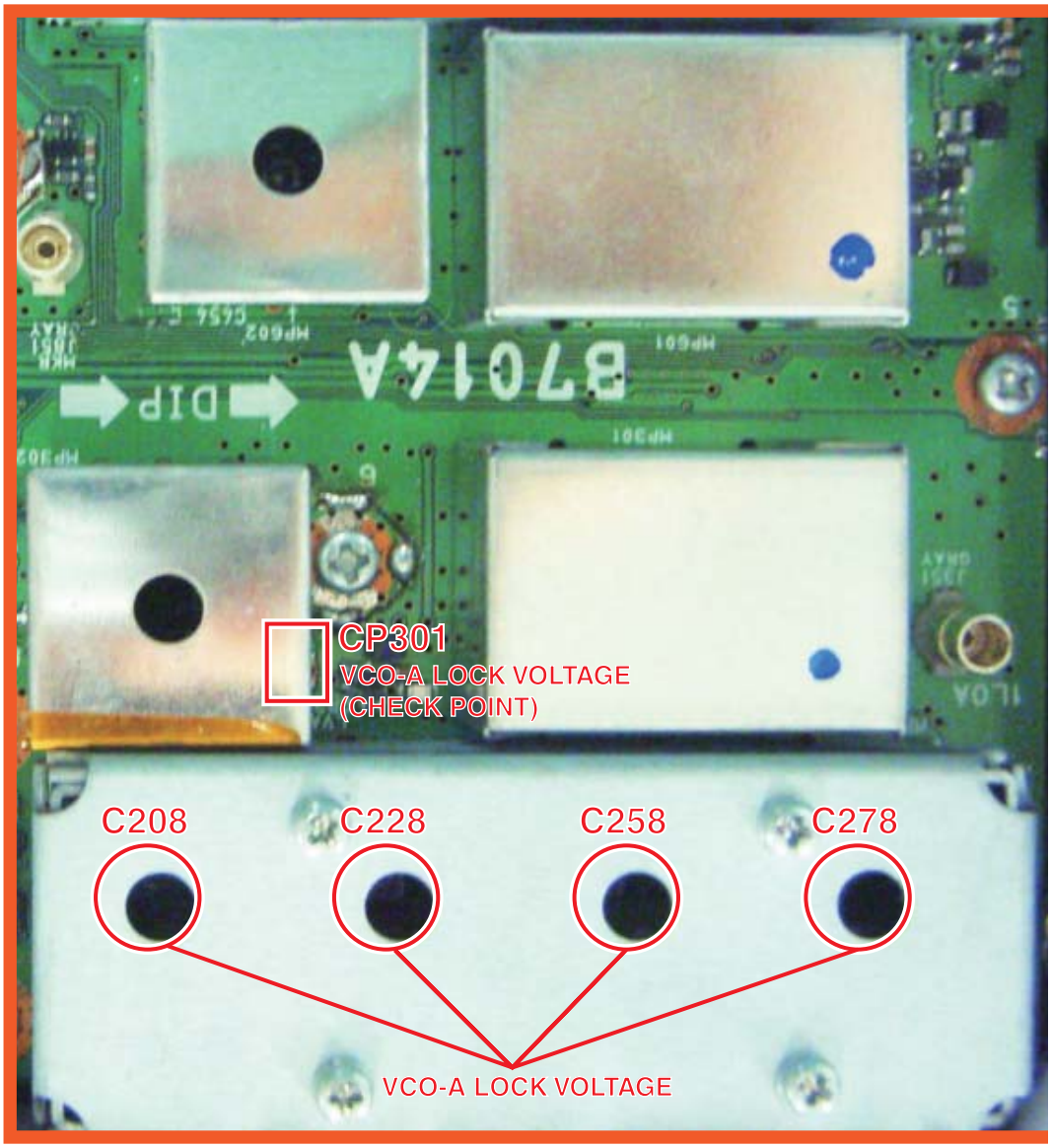

4-3 PLL UNIT ADJUSTMENT (continued)

ADJUSTMENT		ADJUSTMENT CONDITION	OPERATION	ADJUSTMENT POINT	VALUE
LPL B LOCK VOLTAGE	1	• Frequency : 0.030000 MHz (Sub band) • Mode : USB • [DUALWATCH] : "ON" • Receiving	1) Connect a Digital multimeter to **CP401**. 2) Adjust the lock voltage.	C454	2.0 V (1.9–2.1 V)
VCO-B LOCK VOLTAGE	1	• Frequency : 7.999999 MHz (Sub band) • Mode : USB • Receiving	1) Connect a Digital multimeter to **CP601**. 2) Adjust the lock voltage.	C578	4.3 V (4.2–4.4 V)
	2	• Frequency : 19.999999 MHz (Sub band) • Mode : USB • Receiving		C558	
	3	• Frequency : 44.9999999 MHz (Sub band) • Mode : USB • Receiving		C508	
	4	• Frequency : 60.000000 MHz (Sub band) • Mode : USB • Receiving		C528	

<Viewing from the BOTTOM side>

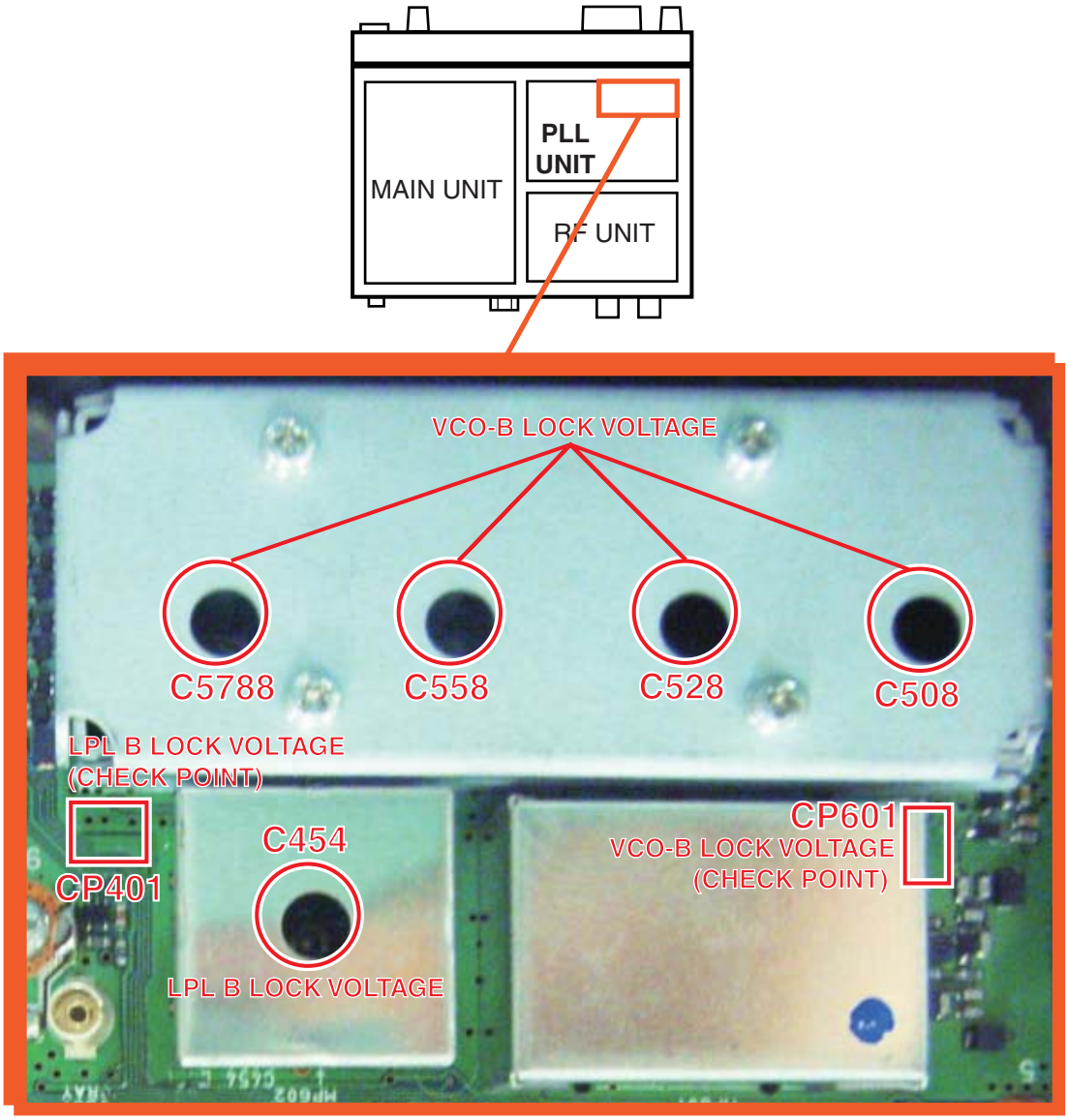

4-3 PLL UNIT ADJUSTMENT (continued)

ADJUSTMENT		ADJUSTMENT CONDITION	OPERATION	ADJUSTMENT POINT	VALUE
R2 LO LEVEL	1	• Frequency : 14.100 MHz (Main band) • Mode : USB • Receiving	1) Connect a Spectrum Analyzer to **J831**. 2) Adjust the LO signal level.	L834	Maximum level

<Viewing from the BOTTOM side>

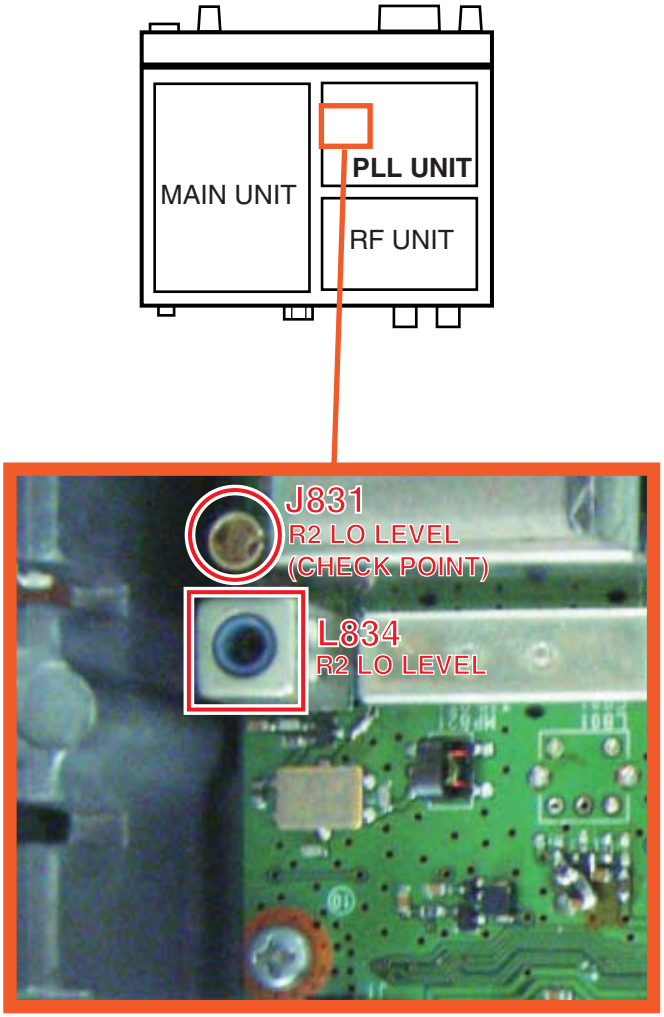

4-4 PA UNIT ADJUSTMENT

ADJUSTMENT		ADJUSTMENT CONDITION	OPERATION	ADJUSTMENT POINT	VALUE
IDLING (Preparation)	"IDLING" must be adjusted by cold-started.				
	1	–	1) Set 5 variable resisters to the preset point. 2) Disconnect the power cable from the transceiver, and connect an DC Ammeter (30 A) between the power supply and transceiver.	R4, R14, R16, R65, R67	Max. counter clockwise
IDLING (PRE-DRIVER)	2	• Frequency : 14.100 MHz • Mode : CW • Push [TRANSMIT] to transmit.	1) Connect a Digital multimeter to **CP1** and adjust the voltage. 2) Measure the current, and note it as the initial value.	R4	0.5 V (0.4–0.6 V)
IDLING (DRIVER)	3	• Frequency : 14.100 MHz • Mode : CW • Push [TRANSMIT] to transmit.	• Adjust the current.	R14	+1.0 A more than "Step 2"
	4		• Adjust the current.	R16	+1.0 A more than "Step 3"
IDLING (FINAL AMP)	5	• Frequency : 14.100 MHz • Mode : CW • Push [TRANSMIT] to transmit.	• Adjust the current.	R65	+1.0 A more than "Step 4"
	6		• Adjust the current.	R67	+1.0 A more than "Step 5"
	7	Apply slight vibration to the PA UNIT, and verify that the current is stable against the vibration.			

<Viewing from the TOP side>

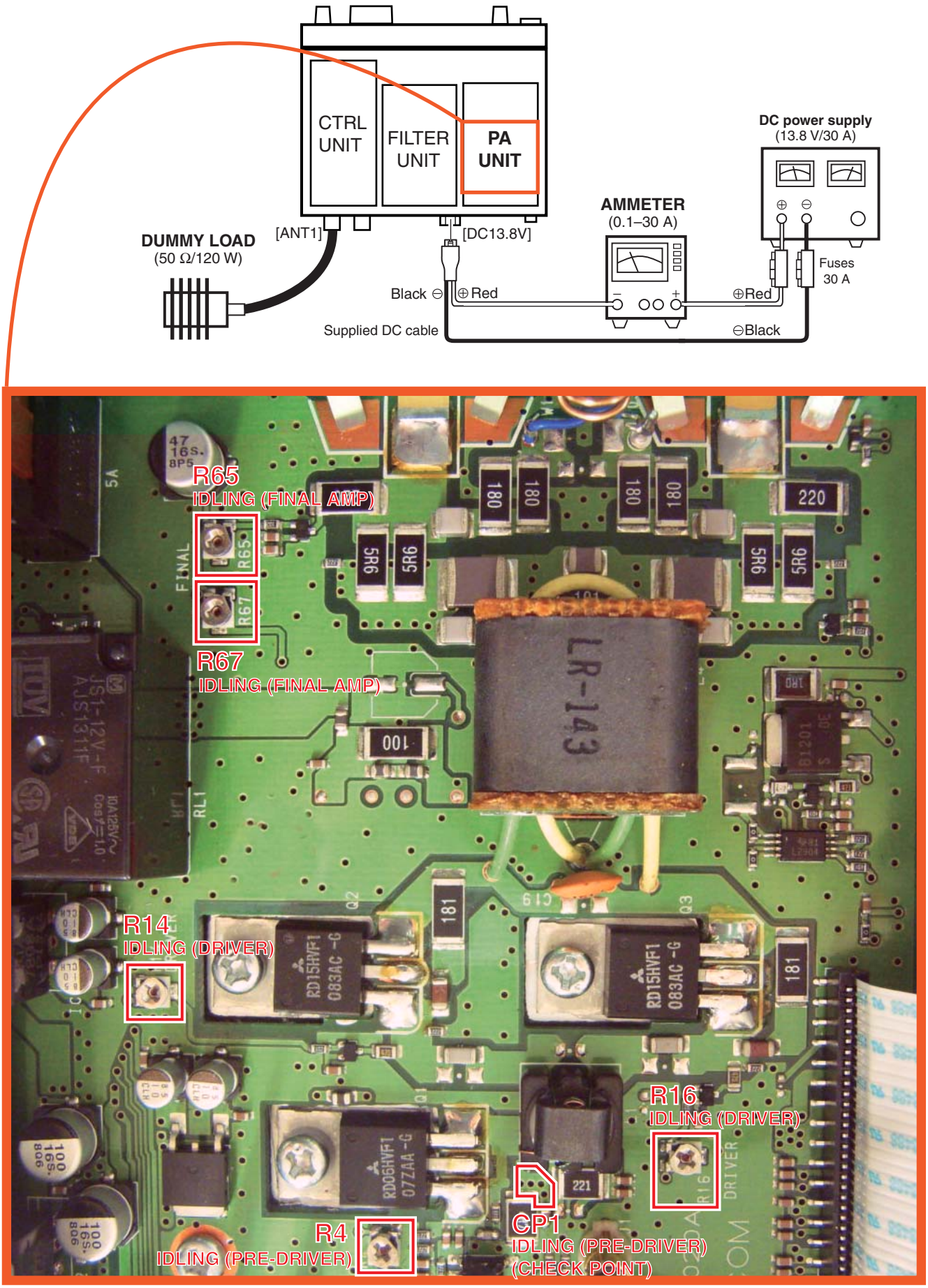

4-5 CTRL UNIT ADJUSTMENT

ADJUSTMENT	ADJUSTMENT CONDITION	OPERATION	ADJUSTMENT POINT	VALUE
TUNER PRESET	• Frequency : 50.0 MHz • Mode : RTTY • [TUNER] : "THROUGH" • Transmitting (Max. power)	1) Connect a 50 Ω dummy load to [ANT1]. 2) Connect the voltmeter to "**REF**." 3) Adjust the voltage.	C5	Minimum voltage

<Viewing from the TOP side>

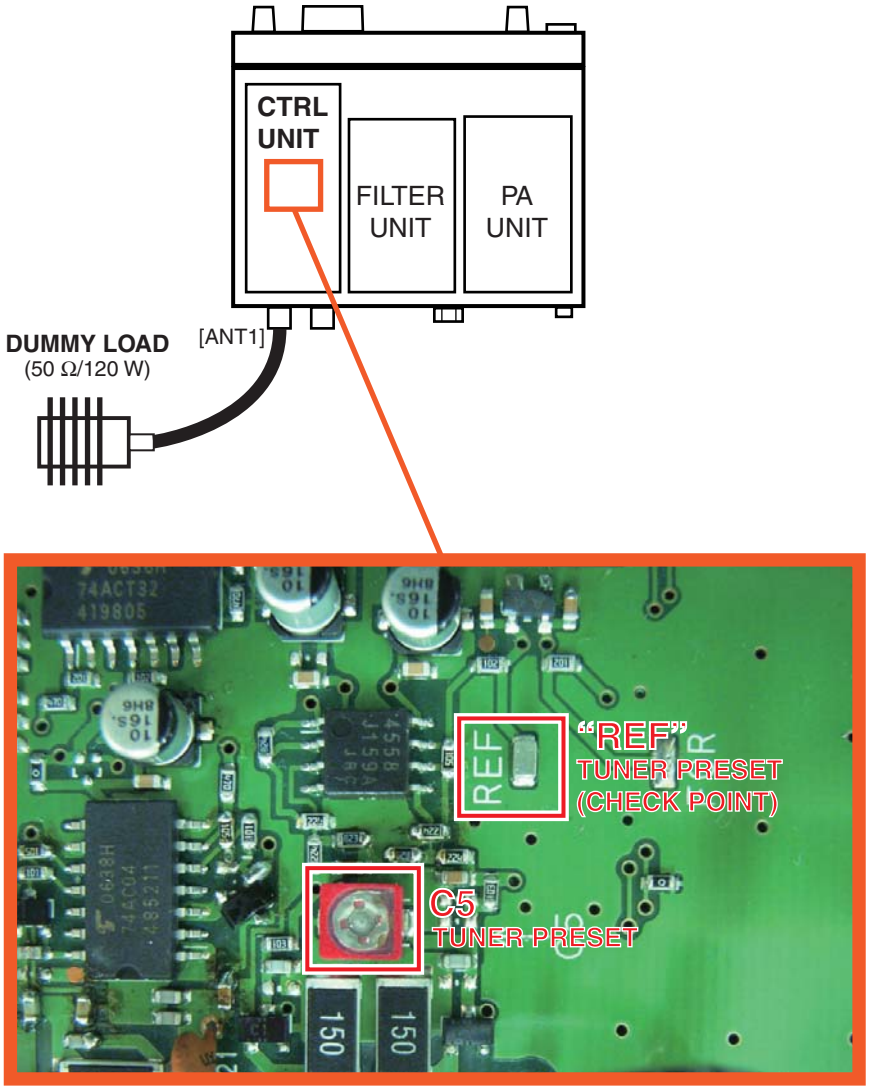

4-6 MAIN UNIT ADJUSTMENT

ADJUSTMENT		ADJUSTMENT CONDITION	OPERATION	ADJUSTMENT POINT	VALUE
PRESET	1	• Receiving	1) Turn the transceiver OFF. 2) Reset the CPU. (While pushing and holding both [F-INP] and [MW], turn the power ON.)	–	–
	2		• Set the variable resister to 3 o'clock position (viewing from REAR).	R1211	3 o'clock position
	3		1) Connect a Digital multimeter to the **CP1201**. 2) Adjust the voltage.	R1227	0.5 V (0.3–0.7 V)
TX PEAK -Preparation-	1	• Frequency : 14.1 MHz • Mode : USB • Transmitting (Max. power)	1) Connect an AC Millivoltmeter and Audio Generator to the [MIC] connector on the FRONT panel, and set it as; Frequency : 1.5 kHz Level : 1 mV 2) Connect an RF Power meter to [ANT1].	–	–
-Adjustment-	2		• Adjust the TX output power. (If ALC is activated during adjustment, reduce the MIC gain.)	L3503	Max. TX power
TX TOTAL GAIN	1	• Frequency : 14.1 MHz • Mode : USB • [MIC GAIN] : Center position • Transmitting	1) Connect an AC Millivoltmeter and Audio Generator to the [MIC] connector on the FRONT panel, and set it as; Frequency : 1.5 kHz Level : 1 mV 2) Connect an RF Power meter to [ANT1]. 3) Adjust the TX output power.	R3520	50 W
TX HIGH POWER (HF BAND)	1	• Frequency : 14.100 MHz • Mode : RTTY • Transmitting	1) Connect an RF Power meter to [ANT1]. 2) Adjust the TX output power.	R1267	103 W
(50 MHz BAND)	2	• Frequency : 50.100 MHz • Mode : RTTY • Transmitting	1) Connect an RF Power meter to [ANT1]. 2) Adjust the TX output power.	R1262	100 W

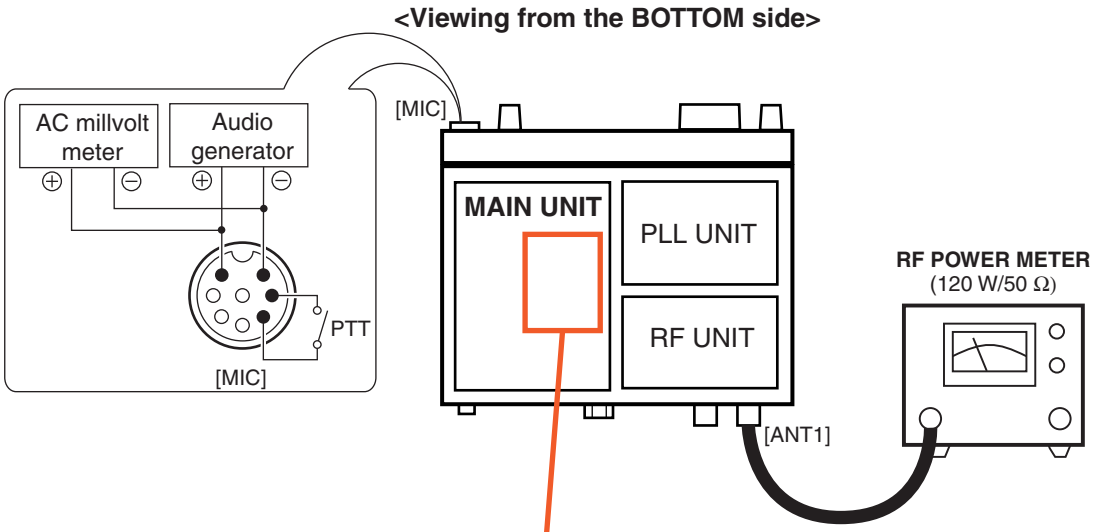
<Viewing from the BOTTOM side>
AC millvolt meter
Audio generator
PTT
[MIC]
[MIC]
MAIN UNIT
PLL UNIT
RF UNIT
[ANT1]
RF POWER METER
(120 W/50 Ω)

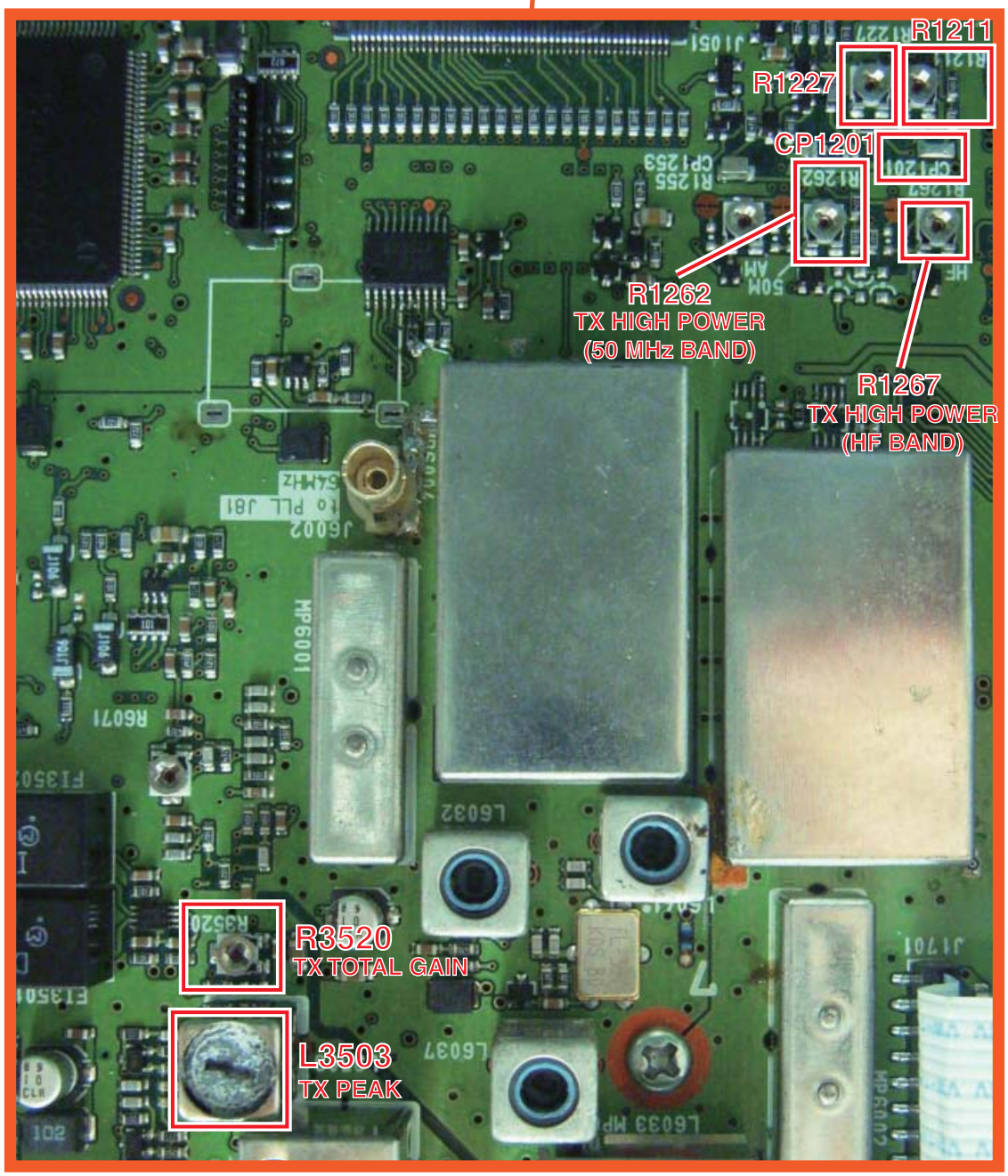
R1211
R1227
CP1201
R1262
TX HIGH POWER
(50 MHz BAND)
R1267
TX HIGH POWER
(HF BAND)
R3520
TX TOTAL GAIN
L3503
TX PEAK

4-6 MAIN UNIT ADJUSTMENT (continued)

ADJUSTMENT		ADJUSTMENT CONDITION	OPERATION	ADJUSTMENT POINT	VALUE
AM CARRIER POWER	1	• Frequency : 14.100 MHz • Mode : AM • MIC input : OFF • Transmitting	1) Connect an RF Power meter to [ANT1]. 2) Adjust the TX output power.	R1255	30 W
Id-APC -Preparation-	1	• Frequency : 54.000 MHz • Mode : RTTY • Transmitting	1) Connect **CP1253** to GND. 2) Turn **R1211** to max. clockwise, then turn it to 90° position. 3) Disconnect the power cable from the transceiver, and connect an DC Ammeter (30 A) between the power supply and transceiver.	–	–
-Adjustment-	2		1) Connect an RF Power meter (or Dummy Load) to [ANT1]. 2) Adjust the driving current.	R1211 (Clockwise rotation)	23.5 A
	3	• Disconnect **CP1253** from the GND.			
RX SENSITIVITY	1	• Frequency : 14.150 MHz • Mode : USB • Receiving	1) Connect an SSG to [ANT1], and set it as. Frequency : 14.1515 MHz Level : 0 dBμ† (107 dBm) Modulation : None 2) Connect an AC Millivoltmeter to **[EXP-SP]**. 3) Adjust the sensitivity.	L3602	Max. audio output level
IMAGE RESPONSE	1	• Frequency : 14.150 MHz • Mode : USB • Receiving	1) Connect an SSG to **J3701**, and set it as. Frequency : 64.530 MHz Level : +50 dBμ† (–57 dBm) Modulation : None 2) Connect an AC Millivoltmeter to **[EXP-SP]**. 3) Adjust the image response.	R3216, C3006 (Repeatedly)	Min. audio output level

†; The output level of the standard signal generator (SSG) is indicated as the SSG's terminated circuit.

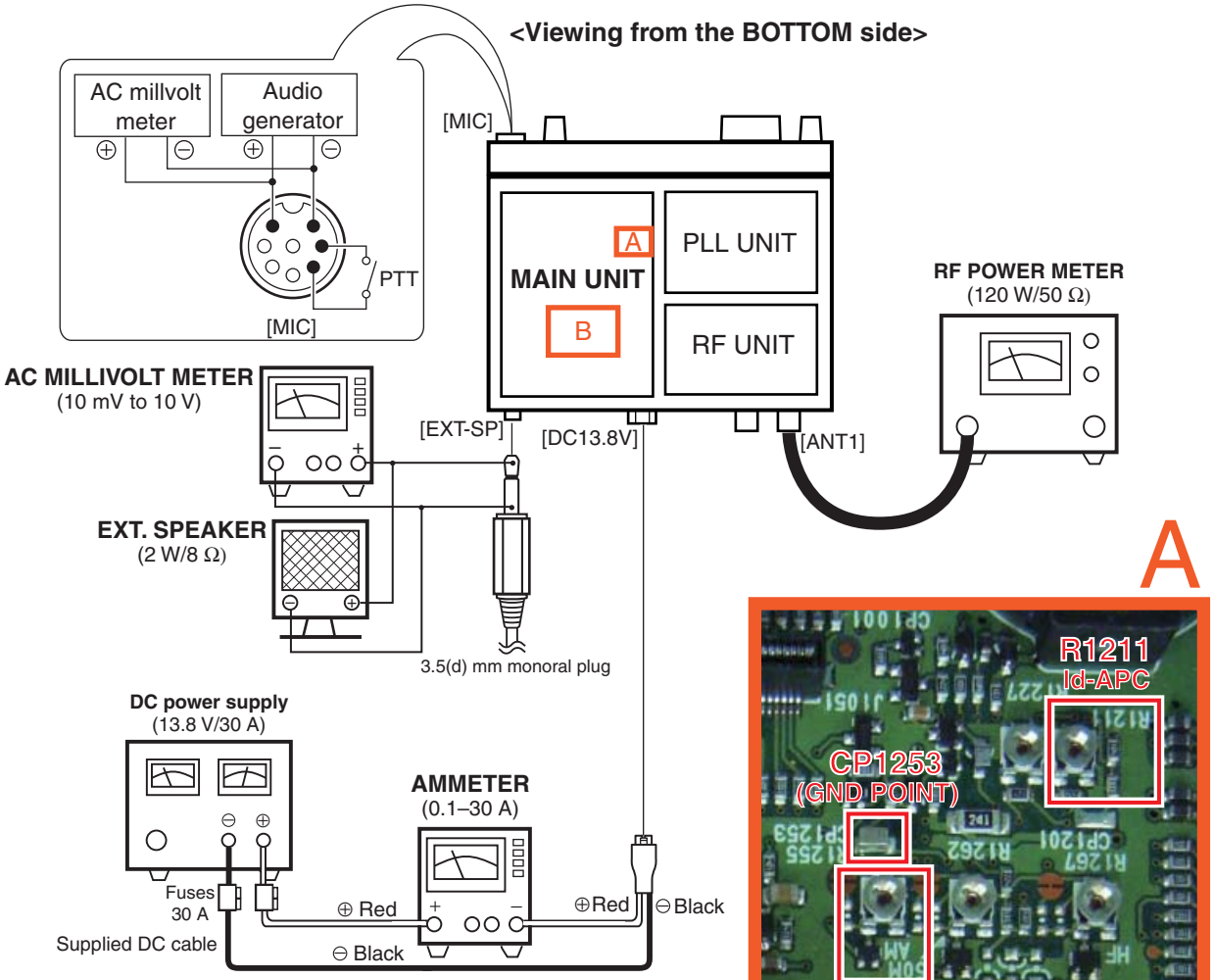
<Viewing from the BOTTOM side>
AC millvolt meter
Audio generator
PTT
[MIC]
[MIC]
MAIN UNIT
A
B
PLL UNIT
RF UNIT
RF POWER METER
(120 W/50 Ω)
AC MILLIVOLT METER
(10 mV to 10 V)
[EXT-SP]
[DC13.8V]
[ANT1]
EXT. SPEAKER
(2 W/8 Ω)
3.5(d) mm monoral plug
DC power supply
(13.8 V/30 A)
AMMETER
(0.1–30 A)
Fuses
30 A
Supplied DC cable
⊕ Red
⊖ Black
⊕Red
⊖Black

A

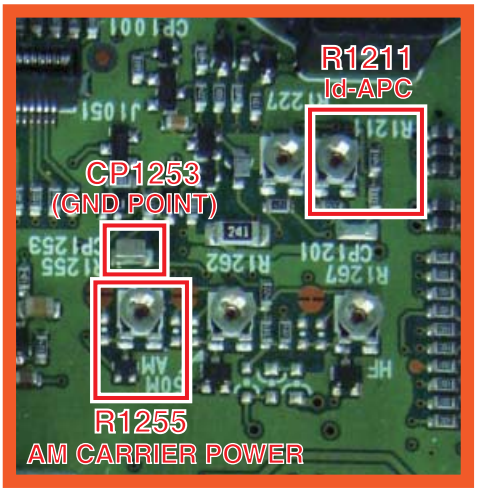
R1211
Id-APC
CP1253
(GND POINT)
R1255
AM CARRIER POWER

B

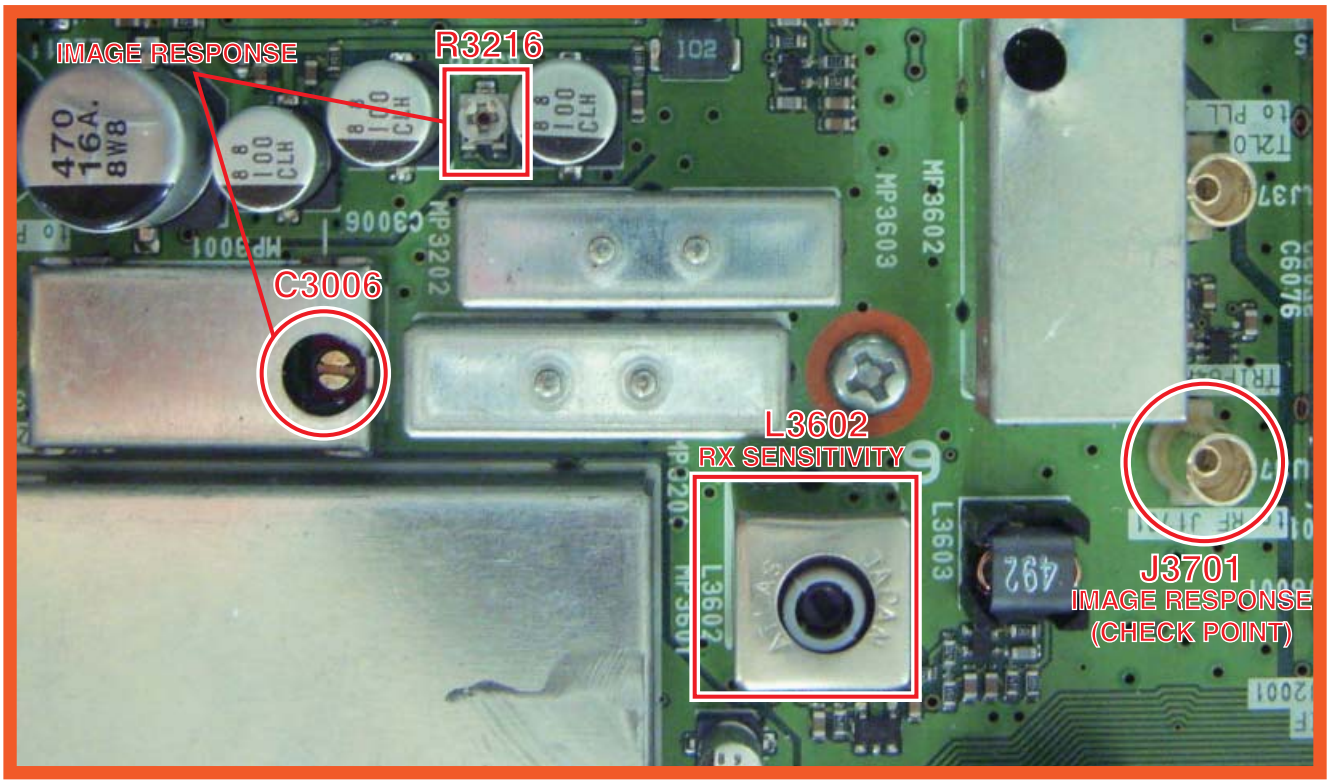
IMAGE RESPONSE
R3216
C3006
L3602
RX SENSITIVITY
J3701
IMAGE RESPONSE
(CHECK POINT)

4-7 MAIN UNIT ADJUSTMENT (SCOPE CIRCUIT)

ADJUSTMENT		ADJUSTMENT CONDITION	OPERATION	ADJUSTMENT POINT	VALUE
SCOPE DISPLAY	1	• Frequency : 14.200 MHz (Main band) • Mode : CW • [DUALWATCH] : "OFF" • [P.AMP] : "OFF" • [ATT] : "OFF" • [SCOPE] : "ON" • [SCOPE ATT] : "OFF" • [SPAN] : "±25 kHz" • Receiving	• Connect an SSG to [ANT1] and set as; Frequency : 14.200 MHz Modulation : None Level : +54 dBμ† (–53 dBm)	L6032→L6037→L6041→L6023→L6028→C6076 (in sequence) and L6023, L6028, C6076 (repeatedly)	Maximum waveform on the SCOPE screen
	2		• Connect an SSG to **J6001** and set as; Frequency : 71.715 MHz Modulation : None Level : +100 dBμ† (–7 dBm)	C6076	Minimum waveform on the SCOPE screen
	3		• Connect an SSG to [ANT1] and set as; Frequency : 14.200 MHz Modulation : None Level : +54 dBμ† (–53 dBm)	L6023, L6028 (repeatedly)	Maximum waveform on the SCOPE screen
SCOPE GAIN	1	• Receiving	1) Connect an SSG to [ANT1] and set as; Frequency : 14.200 MHz Modulation : None Level : +54 dBμ† (–53 dBm) 2) Adjust the waveform to set the peak of the wave spectrum reaches the **6th** scale.	R6071	(See fig.1)
SCOPE ATT	1	• [SCOPE ATT] : "30 dB" • Receiving	1) Connect an SSG to [ANT1] and set as; Frequency : 14.200 MHz Modulation : None Level : +54 dBμ† (–53 dBm) 2) Adjust the waveform to set the peak of the wave spectrum reaches the **3rd** scale.	R6043	(See fig.2)

†; The output level of the standard signal generator (SSG) is indicated as the SSG's terminated circuit.

<fig. 1>

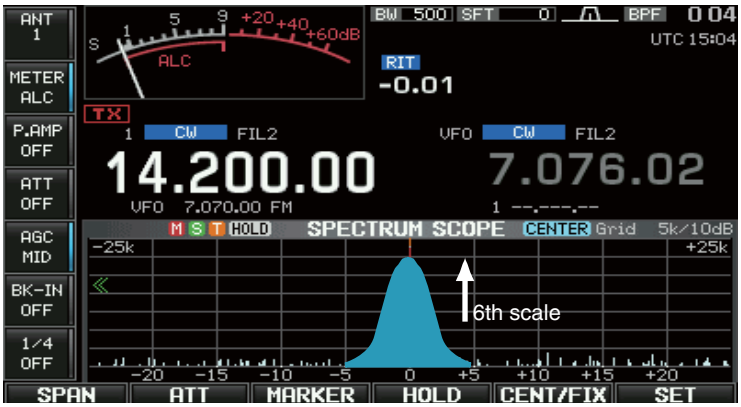

<fig. 2>

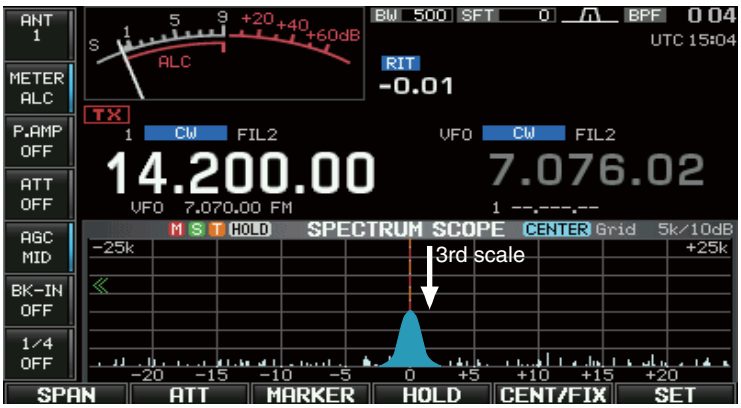

<Viewing from the BOTTOM side>

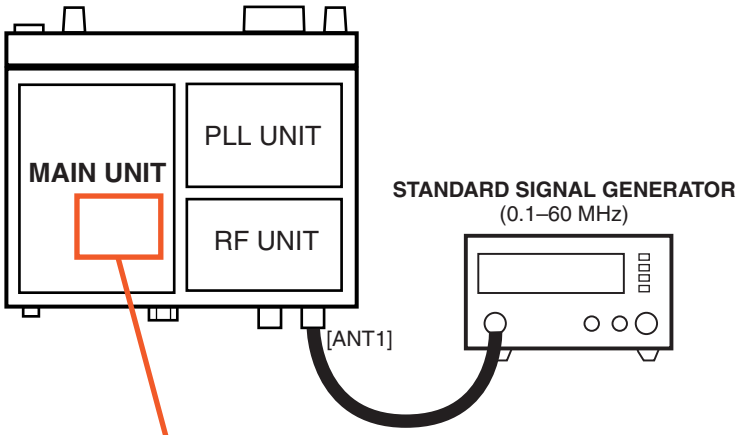

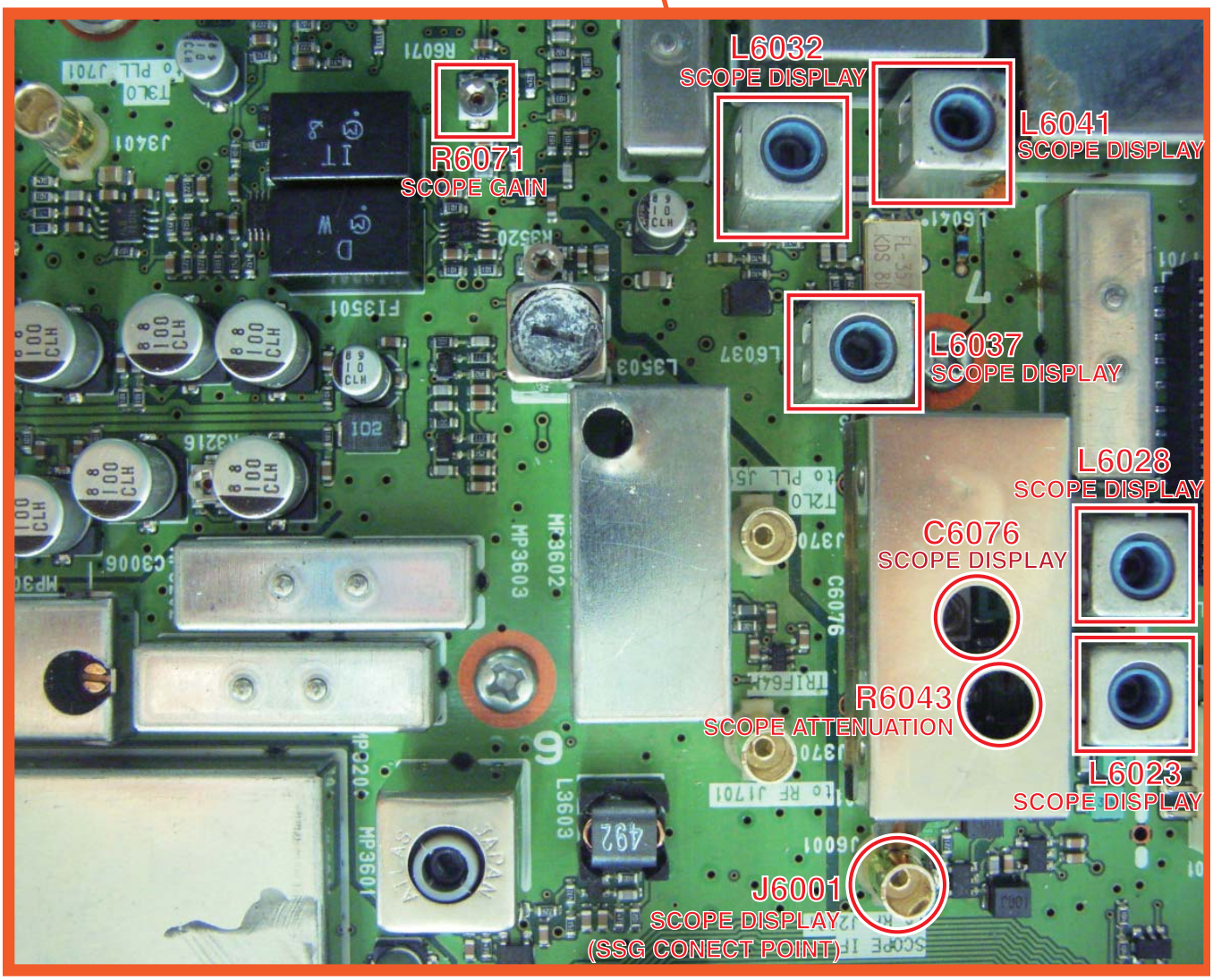

4-8 RF UNIT ADJUSTMENT

ADJUSTMENT		ADJUSTMENT CONDITION	OPERATION	ADJUSTMENT POINT	VALUE
PRESET		• Frequency : 14.100000 MHz • Mode : CW • [DUALWATCH] : "OFF" • [ATT] : "OFF" • [RF/SQL] : Center position • [RF POWER] : "MAX" • Transmitting	• Set 2 trimmer capacitors to the preset position as illustrated below. 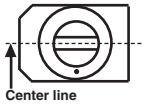 	C1238, C1036	(as shown)
TX PEAK		• Frequency : 14.100000 MHz • Mode : USB • [MIC GAIN] : Center position • Transmitting (Max. power)	1) Connect a RF Voltmeter to **J201**. 2) Adjust the output voltage.	L1553	Maximum voltage
RX SENSITIVITY (MAIN BAND)	1	• Frequency : 14.100000 MHz (Main band) • Mode : USB • [FIL] : 2.4 kHz • [TWIN-PBT] : "Center" (Push [PBT-CLR] for 1 sec.) • [P.AMP1] : "ON" • Receiving	1) Connect an SSG to [ANT1] and set as; Frequency : 14.101500 MHz Modulation : None Level : 0 dBμ† (–107 dBm) 2) Connect an AC Millivoltmeter and a speaker to [EXT-SP]. 3) Adjust the receive sensitivity by tuning the core. L1211 has two peak points. Tune the core in the upper portion. 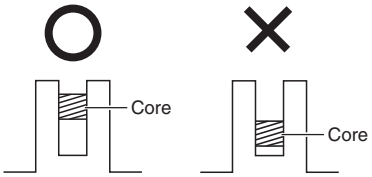 	L1211, C1238 (L1211: Peak point in the upper portion)	Max. sensitivity (Minimum noise level)
(SUB BAND)	2	• Frequency : 14.100000 MHz (Sub band) • Mode : USB • [DUALWATCH] : "ON" • [FIL] : 2.4 kHz • [TWIN-PBT] : "Center" (Push [PBT-CLR] for 1 sec.) • [P.AMP1] : "ON" • [BALANCE] : "SUB MAX" • Receiving	1) Connect an SSG to [ANT1] and set as; Frequency : 14.100000 MHz Modulation : None Level : 0 dBμ† (–107 dBm) 2) Connect an AC Millivoltmeter and a speaker to [EXT-SP]. 3) Adjust the receive sensitivity by tuning the core. L1011 has two peak points. Tune the core in the upper portion. 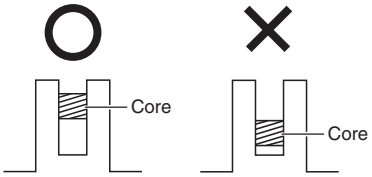 	L1011, C1036 (L1011: Peak point in the upper portion)	Max. sensitivity (Minimum noise level)
MIXER BALANCE (MAIN BAND)	1	• Frequency : 1.907500 MHz (Main and sub bands) • [DUALWATCH] : "ON" • [FIL] : 2.4 kHz • [TWIN-PBT] : "Center" (Push [PBT-CLR] for 1 sec.) • [P.AMP1] : "ON" • Receiving	1) Connect a Spectrum Analyzer to J1651. 2) Adjust the leaking LO signal level.	R1206, R1207	Minimum leaking level
(SUB BAND)	2		• Adjust the leaking LO signal level.	R1006, R1007	

†; The output level of the standard signal generator (SSG) is indicated as the SSG's terminated circuit.

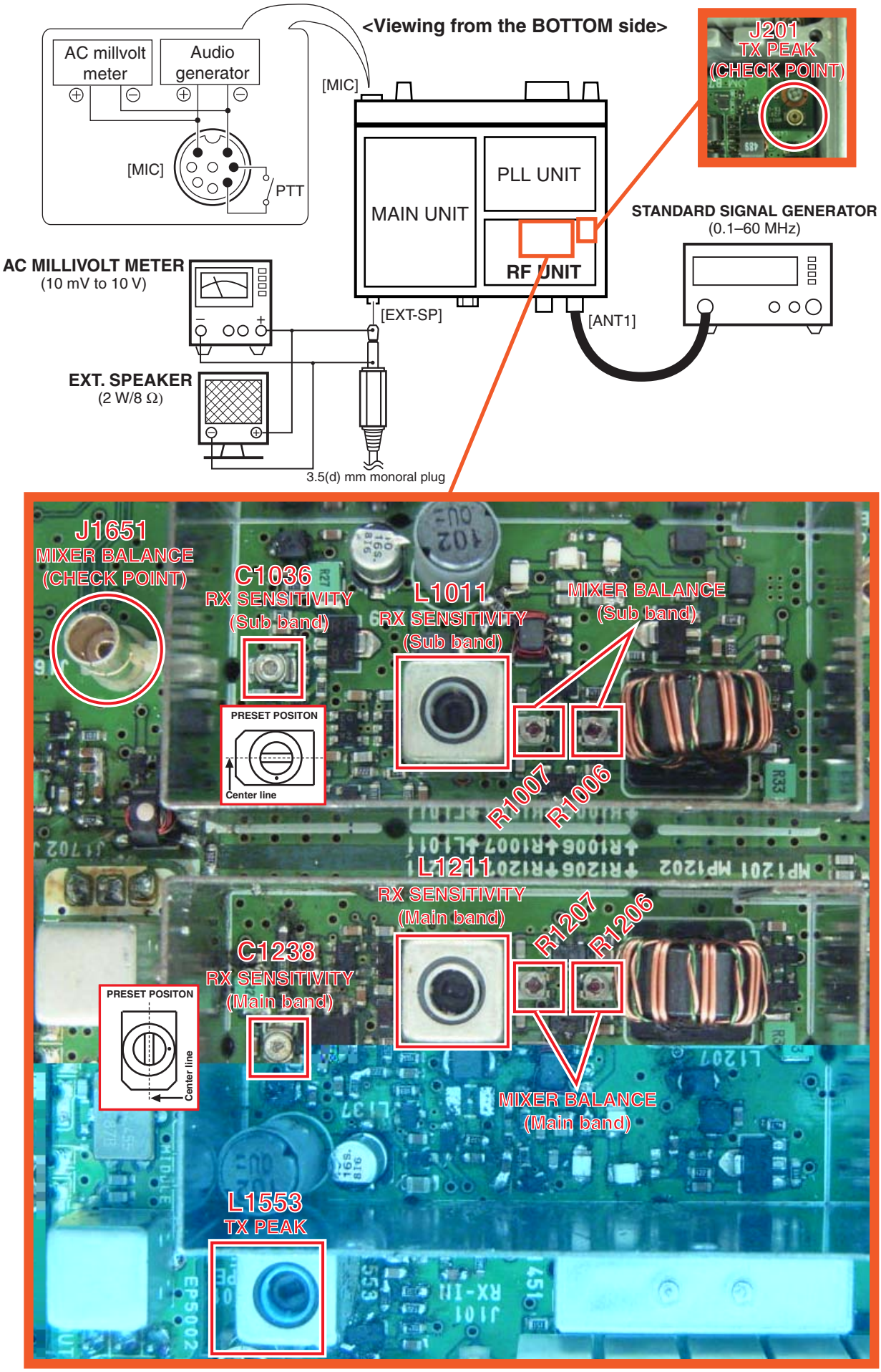
<Viewing from the BOTTOM side>
AC millvolt meter
Audio generator
[MIC]
PTT
MAIN UNIT
PLL UNIT
RF UNIT
J201
TX PEAK
(CHECK POINT)
STANDARD SIGNAL GENERATOR
(0.1–60 MHz)
AC MILLIVOLT METER
(10 mV to 10 V)
[EXT-SP]
[ANT1]
EXT. SPEAKER
(2 W/8 Ω)
3.5(d) mm monoral plug
J1651
MIXER BALANCE
(CHECK POINT)
C1036
RX SENSITIVITY
(Sub band)
L1011
RX SENSITIVITY
(Sub band)
MIXER BALANCE
(Sub band)
PRESET POSITON
Center line
R1007
R1006
L1211
RX SENSITIVITY
(Main band)
R1207
R1206
C1238
RX SENSITIVITY
(Main band)
PRESET POSITON
Center line
MIXER BALANCE
(Main band)
L1553
TX PEAK

4-9 SOFTWARE ADJUSTMENT

■ ENTERING ADJUSTMENT MODE

1) Turn the transceiver OFF.
2) Connect a short plug (See the illust below) to **[REMOTE]**.
3) While pushing and holding both **[SSB]** and **[CW]**, turn the transceiver power ON.
   ("ADJUST MODE" appears on the display as below.)

<FRONT VIEW>

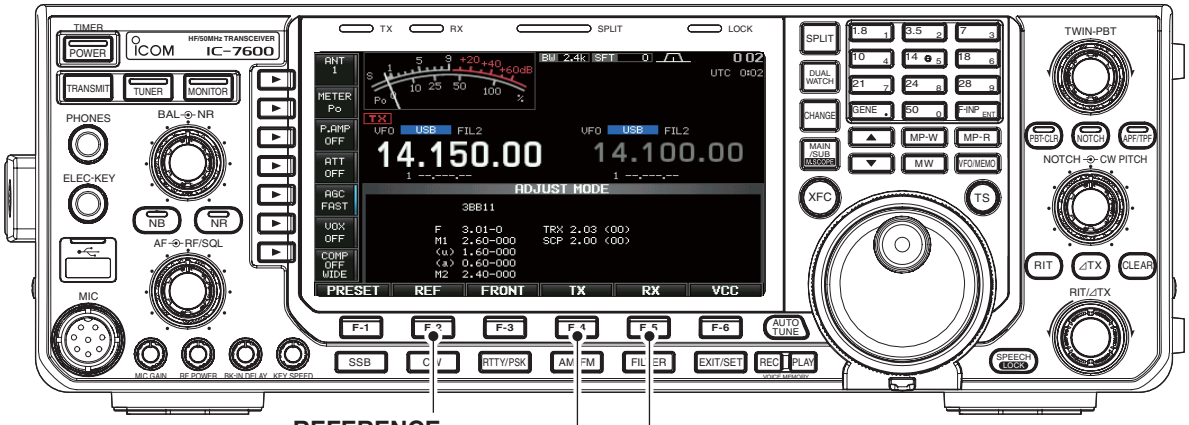

REFERENCE FREQUENCY ADJUSTMENT (page 4-22)

RECEIVE ADJUSTMENT (page 4-20)

TRANSMIT ADJUSTMENT (page 4-18)

CAUTION: When a TX adjustment item is selected, the transceiver transmits automatically. Disconnect the SSG from the antenna connector if connected, and connect a dummy load (50 Ω/120 W).

<REAR VIEW>

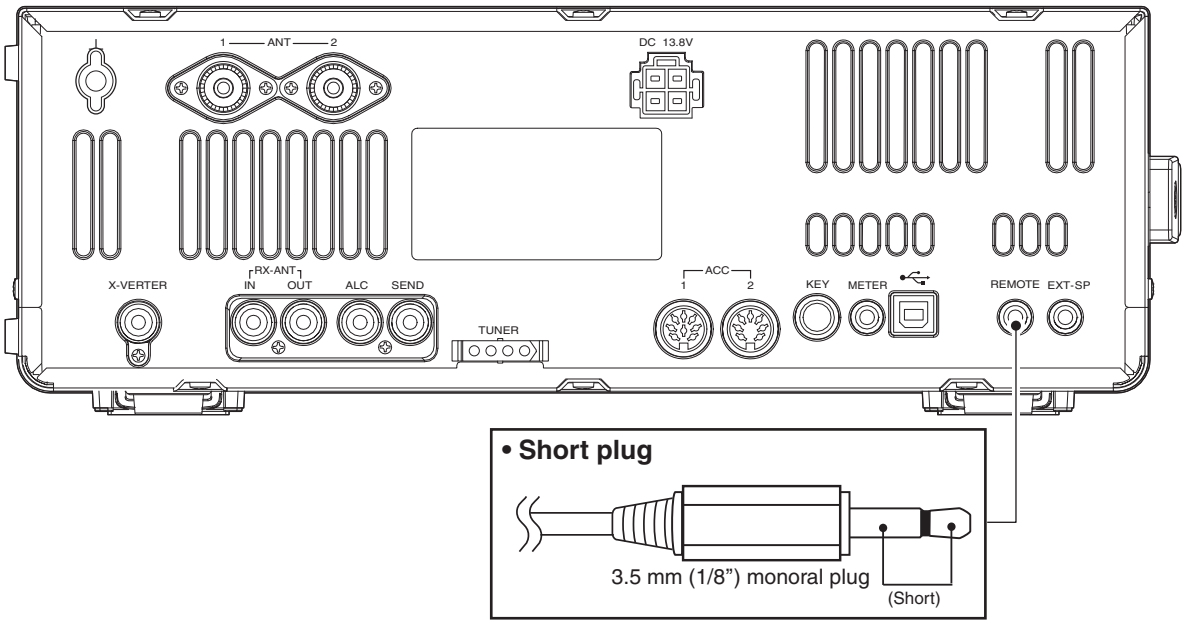

4-9-1 SOFTWARE ADJUSTMENT (TRANSMIT)

Push [F-4] (TX) to enter the TRANSMIT ADJUSTMENT MODE.

4-9-1 SOFTWARE ADJUSTMENT (TRANSMIT) (continued)

ADJUSTMENT		ADJUSTMENT ITEM	OPERATION	VALUE
PREPARATION	1	–	1) Connect an Audio Generator and AC Millivoltmeter to the [MIC] connector on the FRONT panel, and set it as; Frequency : 1.5 kHz Level : 10 mV 2) Connect an RF Power meter (terminated) to [ANT1]. 3) Connect a Dummy Load (SWR=2; 100 Ω) to [ANT2]. 4) Disconnect the power cable from the transceiver, and connect an DC Ammeter (30 A) between the power supply and transceiver.	–
POWER METER (HF BAND)	1	**[POWER HF/50M 0%]**	• Push [F-6] (SET).	–
	2	**[POWER HF Tuner]**	1) Adjust the TX power using MAIN DIAL. 2) Push [F-6] (SET).	10 W
	3	**[POWER HF 10%]**	1) Adjust the TX power using MAIN DIAL. 2) Push [F-6] (SET).	10 W
	4	**[POWER HF 50%]**	1) Adjust the TX power using MAIN DIAL. 2) Push [F-6] (SET).	50 W
	5	**[POWER HF APC Low Volt]**	1) Adjust the TX power using MAIN DIAL. 2) Push [F-6] (SET).	80 W
	6	**[POWER HF 100%]**	1) Adjust the TX power using MAIN DIAL. 2) Push [F-6] (SET).	100 W
POWER METER (50MHz BAND)	1	**[POWER 50M Tuner]**	1) Adjust the TX power using MAIN DIAL. 2) Push [F-6] (SET).	10 W
	2	**[POWER 50M 10%]**	1) Adjust the TX power using MAIN DIAL. 2) Push [F-6] (SET).	10 W
	3	**[POWER 50M 50%]**	1) Adjust the TX power using MAIN DIAL. 2) Push [F-6] (SET).	50 W
	4	**[POWER 50M 100%]**	1) Adjust the TX power using MAIN DIAL. 2) Push [F-6] (SET).	99 W
POWER-DOWN SETTING	1	**[POWER for Power Down HF/50M]**	1) Adjust the TX power using MAIN DIAL. 2) Push [F-6] (SET).	50 W
ALC METER	1	**[ALC]**	• Push [F-6] (SET).	–
DRIVE GAIN	1	**[DRIVE]**	• Push [F-6] (SET).	–
Vd METER	1	**[Vd 13.8V]**	• Push [F-6] (SET).	–
Id METER	1	**[Id 0A]**	• Push [F-6] (SET).	–
	2	**[Id 10A]**	1) Adjust the driving current using MAIN DIAL. 2) Push [F-6] (SET).	10 A
	3	**[Id 15A]**	1) Adjust the driving current using MAIN DIAL. 2) Push [F-6] (SET).	15 A
SWR METER	1	**[SWR]**	• Push [F-6] (SET). (Returns to "ADJUSTMENT MODE.")	–

4-9-2 SOFTWARE ADJUSTMENTS (RECEIVE)

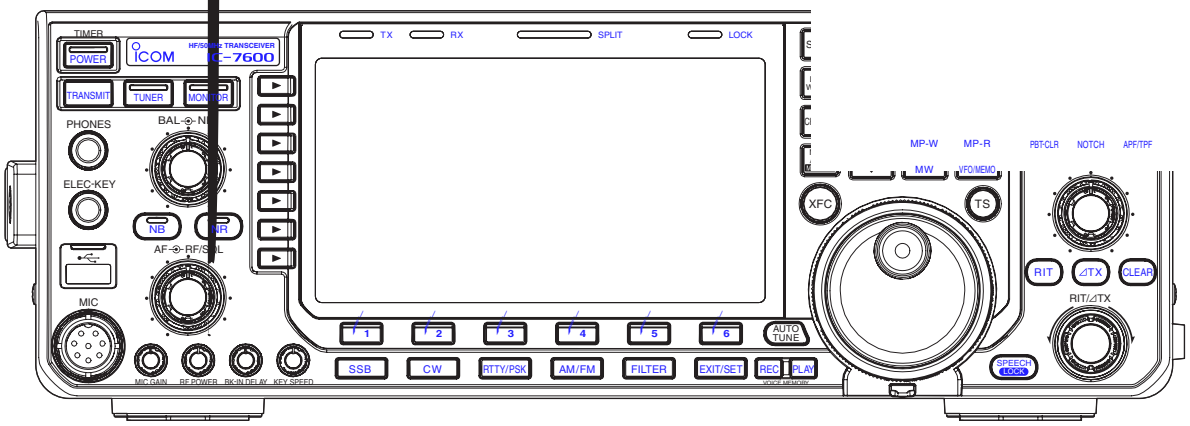

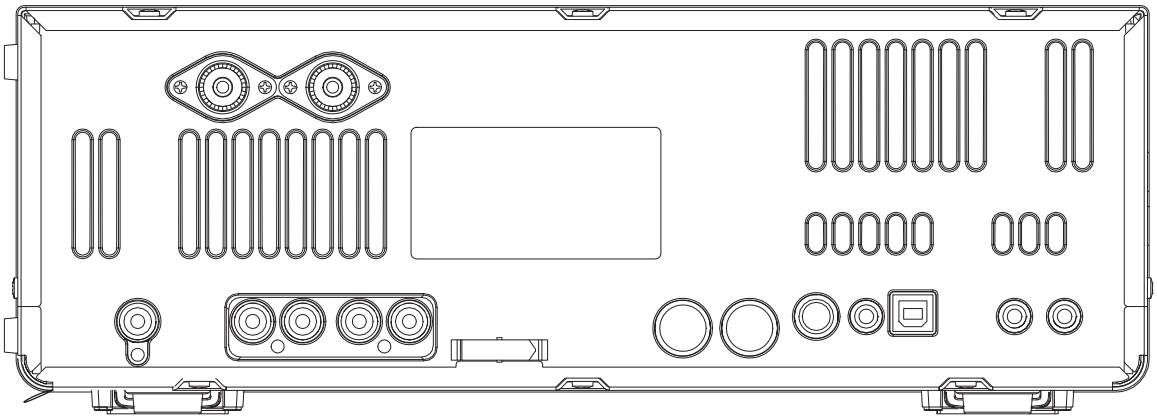

4-9-2 SOFTWARE ADJUSTMENT (RECEIVE) (continued)

ADJUSTMENT		ADJUSTMENT ITEM	OPERATION	VALUE
PREPARATION		–	1) Connect an SSG to [ANT1] and set it as; Frequency : 14.1515 MHz Modulation : None Level : OFF (initially) 2) Connect an AC Millivoltmeter to [EXT-SP].	–
TOTAL GAIN (Pre-AMP: OFF)	1	**[Total Gain HF PRE OFF]**	1) Set the SSG as; Level : +60 dBμ† (–47 dBm) 2) Set the audio output level to 0 dB as the reference. 3) Set the SSG as; Level : "OFF" 4) Adjust the AF output level using MAIN DIAL, then push [F-6] (SET).	–30 dB
(Pre-AMP: ON)	2	**[Total Gain HF PRE ON]**	• Adjust the AF output level using MAIN DIAL, then push [F-6] (SET).	
EXTERNAL AGC	1	**[AGC (RX-DSP)]**	1) Set the SSG as; Level : +70 dBμ† (–37 dBm) 2) Push [F-6] (SET).	–
S-METER	1	**[HF S0 LEVEL]**	1) Set the SSG as; Level : "OFF" 2) Push [F-6] (SET). (the beep "Pi" sounds) **NEVER CHANGE** the SSG output level until the two short beeps "PiPi" sound. The two short beeps will sound after 0.5 sec. from 1st single beep "Pi" sounds.	–
	2	**[HF S9 LEVEL]**	1) Set the SSG as; Level : +34 dBμ† (–73 dBm) 2) Push [F-6] (SET). (the beep "Pi" sounds) **NEVER CHANGE** the SSG output level until the two short beeps "PiPi" sound. The two short beeps will sound after 1 sec. from 1st single beep "Pi" sounds.	–
	3	**[S9+60 LEVEL]**	1) Set the SSG as; Level : +94 dBμ† (–13 dBm) 2) Push [F-6] (SET). (the beep "Pi" sounds) **NEVER CHANGE** the SSG output level until the two short beeps "PiPi" sound. The two short beeps will sound after 0.5 sec. from 1st single beep "Pi" sounds. (Returns to "ADJUST MODE.")	–

†; The output level of the standard signal generator (SSG) is indicated as the SSG's terminated circuit.

4-9-3 SOFTWARE ADJUSTMENT (FREQUENCY)

Push [F-2] (REF) to enter the RECEIVE ADJUSTMENT MODE.

ADJUSTMENT		ADJUSTMENT ITEM	OPERATION	VALUE
REFERENCE FREQUENCY	1	–	1) Connect a Frequency Counter to **J81** (PLL UNIT). 2) Adjust the reference frequency using MAIN DIAL. 3) Push [F-6] (SET). (Returns to "ADJUST MODE.")	64.000000 MHz

■ CONNECTION FOR THE FREQUENCY ADJUSTMENT

<FRONT VIEW>

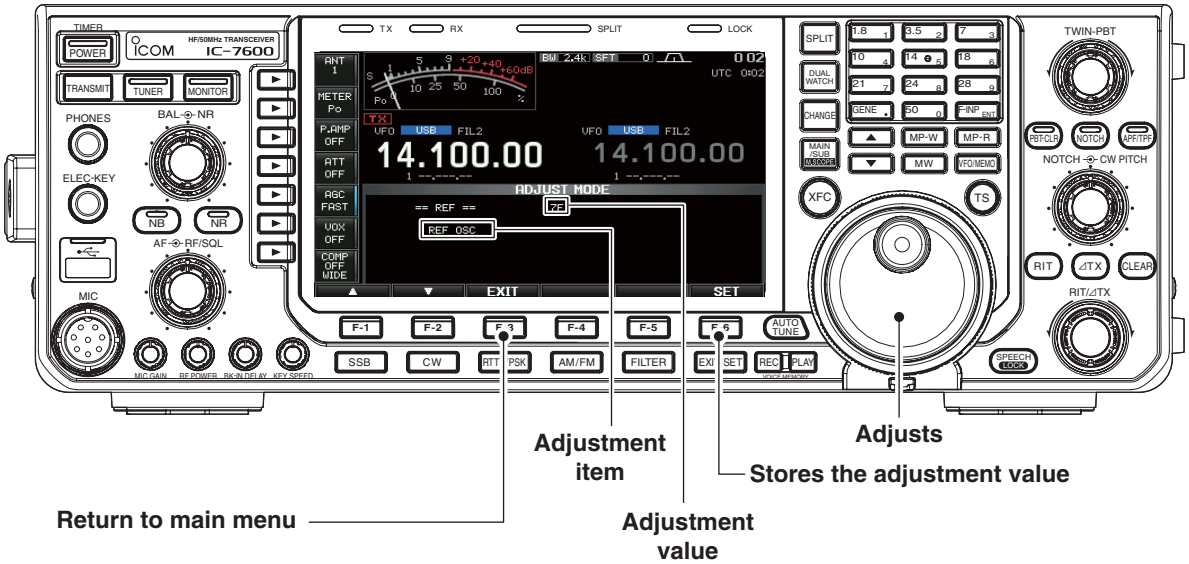

<Viewing from the BOTTOM side>

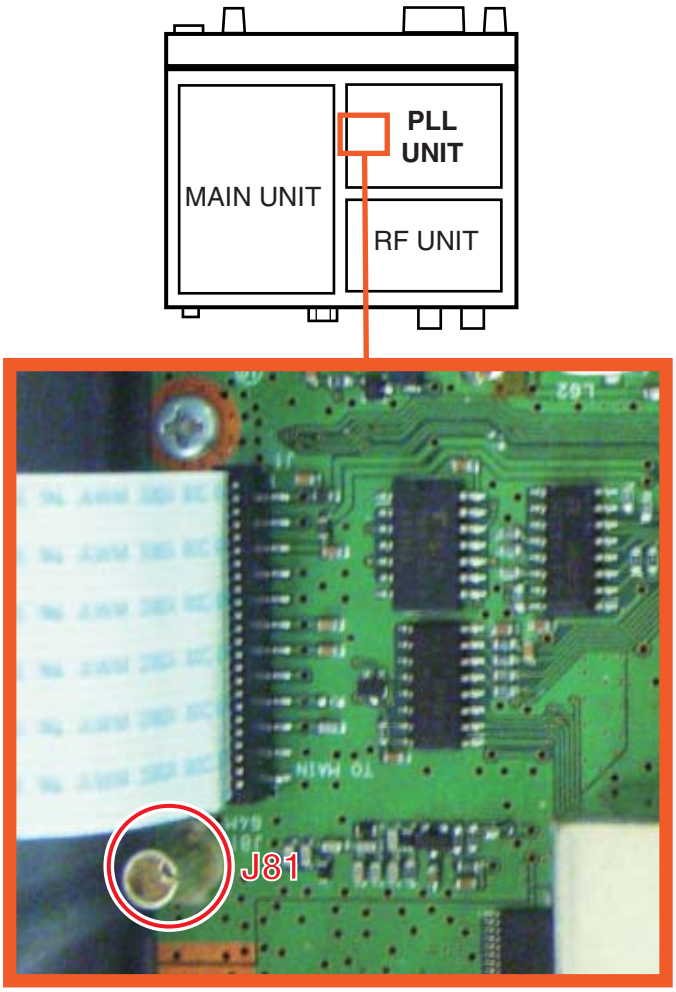

4-9-4 SOFTWARE ADJUSTMENT (TUNER)

■ ENTERING TUNER REFERENCE ADJUSTMENT MODE

1) Turn the transceiver OFF.
2) Connect a 50 Ω Dummy Load to [ANT1].
3) Connect a short plug (see the illust below) to [REMOTE].
4) While pushing and holding both **[FILTER]** and **[SET/EXIT]**, turn the transceiver power ON.

ADJUSTMENT		ADJUSTMENT ITEM	OPERATION	VALUE
TUNER REFERENCE	1	[== TUNER ==]	1) Push [F-6] (START) key. 2) 10 sec. (approx.) after, verify that "∗ ∗ ∗ OK ∗ ∗ ∗" is displayed. 3) Turn the power OFF.	–

■ CONNECTION FOR THE TUNER REFERENCE ADJUSTMENT

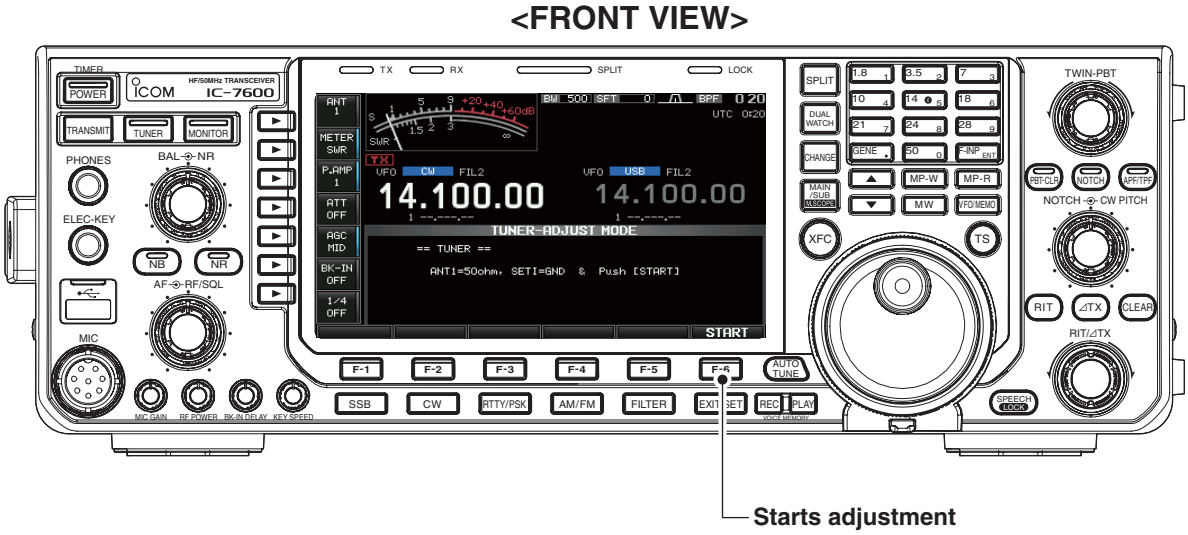

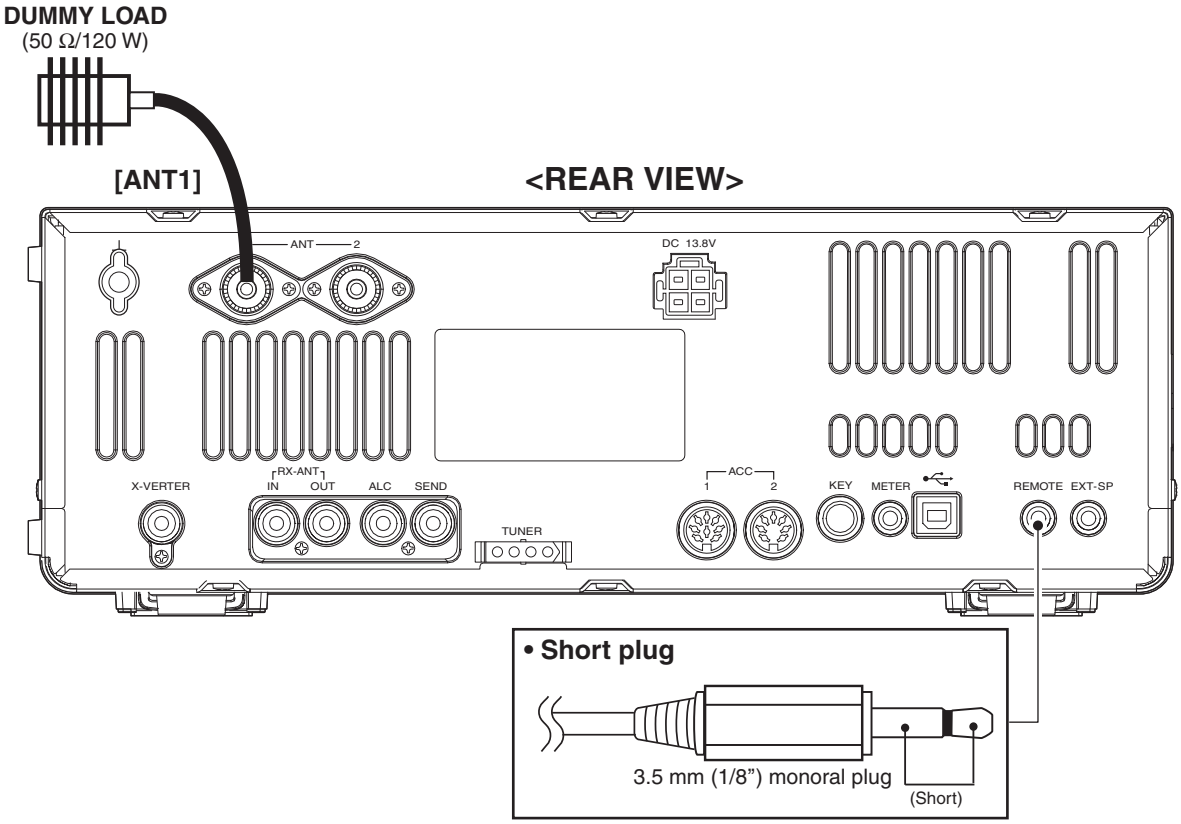

[LOGIC UNIT]

REF NO.	PARTS NO.	DESCRIPTION	M.	H/V LOCATION
IC1	1130013750	S.IC EM639165TS-7G	T	109/62.6
IC2	1130013750	S.IC EM639165TS-7G	T	84.1/62.6
IC21	1130015113	S.IC JS28F128J3D-75(SX-3073A-3)	T	103.2/37.1
IC51	1130011591	S.IC IDT70V24L15PFG	B	119.8/87.1
IC53	1110005731	S.IC S-80928CNMC-G8Y-G	B	65.8/89.4
IC54	1130007431	S.IC TC7S14FU(TE85R,F)	B	61/88.6
IC55	1130012600	S.IC SN74AHC1G04DCKR	B	58.1/87.9
IC102	1130013010	S.IC SN74AHC1G08DCK3	T	115.7/35.5
IC103	1140014730	S.IC HD6417751RBG240V	T	70.8/30.7
IC105	1130015120	S.IC CY22393FXC(SX-3073F)	B	97.8/18
IC201	1130013750	S.IC EM639165TS-7G	T	8.9/79.8
IC202	1130013750	S.IC EM639165TS-7G	B	14.8/80.1
IC203	1140011571	S.IC HD64404BTDV	T	40.7/80.6
IC208	1130014030	S.IC BD6516F-E2	T	65.8/95.2
IC209	1190001920	S.IC AK5355-VT-E2	B	90.8/6.7
IC210	1190001920	S.IC AK5355-VT-E2	B	76.7/6.7
IC211	1190001910	S.IC AK4384-VT-E2	B	65.9/6.7
IC604	1140014710	S.IC HD64F2370VFQ34V	B	140.3/66.4
IC605	1140015050	S.IC XC9572XL-10TQG100C (SX-3073E)	B	131.9/35.3
IC607	1130013010	S.IC SN74AHC1G08DCK3	T	142.8/87
IC608	1130013010	S.IC SN74AHC1G08DCK3	T	148.5/87
IC609	1130005252	S.IC TC74HC08AF(EL,F)	T	119/77.2
IC610	1130014800	S.IC R1EX24064ATA00A	T	148/64.6
IC661	1130012600	S.IC SN74AHC1G04DCKR	T	147.8/77.7
IC721	1130010111	S.IC TC7WH04FU(TE12L,F)	B	150.5/43.3
IC851	1180003100	S.REG BD9302FP-E2	T	179.5/87.9
IC871	1180003100	S.REG BD9302FP-E2	T	180.1/52.2
IC901	1110003870	S.IC NJM2058M-TE1-#ZZZB	B	141.1/6.6
IC902	1110003870	S.IC NJM2058M-TE1-#ZZZB	B	124.1/6.6
Q725	1510000771	S.TRA 2SA1586-GR(TE85L,F)	B	155/39
Q727	1530003900	S.TRA KTC4075 BL-RTK/P	B	155.1/41.5
Q731	1590003680	S.TRA KRC402 RTK/P	B	147.9/36.7
Q1031	1560001221	S.FET ECH8301-TL-E	T	190.2/30.4
D51	1750001320	S.DIO KDS4148U RTK/P [USA]	T	52.5/27.1
	1750001320	S.DIO KDS4148U RTK/P [EUR]		
	1750001320	S.DIO KDS4148U RTK/P [EUR-1]		
	1750001320	S.DIO KDS4148U RTK/P [ESP]		
	1750001320	S.DIO KDS4148U RTK/P [KOR]		
	1750001320	S.DIO KDS4148U RTK/P [TPE]		
	1750001320	S.DIO KDS4148U RTK/P [CHN]		
	1750001320	S.DIO KDS4148U RTK/P [ITR]		
	1750001320	S.DIO KDS4148U RTK/P [EXP]		
D52	1750001320	S.DIO KDS4148U RTK/P [EUR-1]	T	52.5/23.6
	1750001320	S.DIO KDS4148U RTK/P [ESP]		
	1750001320	S.DIO KDS4148U RTK/P [KOR]		
	1750001320	S.DIO KDS4148U RTK/P [TPE]		
	1750001320	S.DIO KDS4148U RTK/P [CHN]		
	1750001320	S.DIO KDS4148U RTK/P [FRA]		
	1750001320	S.DIO KDS4148U RTK/P [EXP]		
D53	1750001320	S.DIO KDS4148U RTK/P [USA]	T	52.5/25.3
	1750001320	S.DIO KDS4148U RTK/P [EUR]		
	1750001320	S.DIO KDS4148U RTK/P [EUR-1]		
	1750001320	S.DIO KDS4148U RTK/P [TPE]		
	1750001320	S.DIO KDS4148U RTK/P [CHN]		
D54	1750001320	S.DIO KDS4148U RTK/P [USA]	T	52.5/28.8
	1750001320	S.DIO KDS4148U RTK/P [EUR]		
	1750001320	S.DIO KDS4148U RTK/P [EUR-1]		
	1750001320	S.DIO KDS4148U RTK/P [ESP]		
	1750001320	S.DIO KDS4148U RTK/P [KOR]		
	1750001320	S.DIO KDS4148U RTK/P [TPE]		
	1750001320	S.DIO KDS4148U RTK/P [ITR]		
D55	1750001320	S.DIO KDS4148U RTK/P [EUR]	T	52.5/20.1
	1750001320	S.DIO KDS4148U RTK/P [EUR-1]		
	1750001320	S.DIO KDS4148U RTK/P [ESP]		
	1750001320	S.DIO KDS4148U RTK/P [CHN]		
	1750001320	S.DIO KDS4148U RTK/P [ITR]		
	1750001320	S.DIO KDS4148U RTK/P [EXP]		
D56	1750001320	S.DIO KDS4148U RTK/P [EUR-1]	T	52.5/21.8
	1750001320	S.DIO KDS4148U RTK/P [ESP]		
	1750001320	S.DIO KDS4148U RTK/P [KOR]		
	1750001320	S.DIO KDS4148U RTK/P [TPE]		
	1750001320	S.DIO KDS4148U RTK/P [CHN]		
	1750001320	S.DIO KDS4148U RTK/P [FRA]		
	1750001320	S.DIO KDS4148U RTK/P [EXP]		
D57	1750001320	S.DIO KDS4148U RTK/P [USA]	T	52.5/18.3
	1750001320	S.DIO KDS4148U RTK/P [EUR]		
	1750001320	S.DIO KDS4148U RTK/P [EUR-1]		
	1750001320	S.DIO KDS4148U RTK/P [TPE]		
	1750001320	S.DIO KDS4148U RTK/P [CHN]		
D58	1750001320	S.DIO KDS4148U RTK/P [USA]	T	52.5/16.6
	1750001320	S.DIO KDS4148U RTK/P [EUR]		
	1750001320	S.DIO KDS4148U RTK/P [EUR-1]		
	1750001320	S.DIO KDS4148U RTK/P [ESP]		
	1750001320	S.DIO KDS4148U RTK/P [KOR]		
	1750001320	S.DIO KDS4148U RTK/P [ITR]		
D59	1750001320	S.DIO KDS4148U RTK/P [EUR]	T	52.5/14.8
	1750001320	S.DIO KDS4148U RTK/P [EUR-1]		
	1750001320	S.DIO KDS4148U RTK/P [ESP]		
	1750001320	S.DIO KDS4148U RTK/P [CHN]		
	1750001320	S.DIO KDS4148U RTK/P [ITR]		
	1750001320	S.DIO KDS4148U RTK/P [EXP]		
D60	1750001320	S.DIO KDS4148U RTK/P	T	56.3/27.1
D61	1750001320	S.DIO KDS4148U RTK/P	T	56.3/23.6

[LOGIC UNIT]

REF NO.	PARTS NO.	DESCRIPTION	M.	H/V LOCATION
D62	1750001320	S.DIO KDS4148U RTK/P	T	56.3/25.3
D63	1750001320	S.DIO KDS4148U RTK/P	T	56.3/28.8
D66	1750001320	S.DIO KDS4148U RTK/P	T	56.3/18.3
D67	1750001320	S.DIO KDS4148U RTK/P [EUR]	T	56.3/16.6
	1750001320	S.DIO KDS4148U RTK/P [EUR-1]		
	1750001320	S.DIO KDS4148U RTK/P [ITR]		
	1750001320	S.DIO KDS4148U RTK/P [FRA]		
D68	1750001320	S.DIO KDS4148U RTK/P	T	56.3/14.8
D101	1750001320	S.DIO KDS4148U RTK/P	B	66.5/18.7
D102	1750001320	S.DIO KDS4148U RTK/P	B	68.2/18.7
D206	1790000980	S.DIO MA742(TX)	T	45.8/95.6
D207	1790000980	S.DIO MA742(TX)	T	49.2/95.6
D711	1750001320	S.DIO KDS4148U RTK/P	B	154.5/63.6
D715	1790001241	S.DIO MA2S7280GL	B	154.5/65.2
D727	1750001320	S.DIO KDS4148U RTK/P	B	155.1/43.7
D731	1750001180	S.DIO KDS122 RTK/P	B	145/36.7
D732	1750001180	S.DIO KDS122 RTK/P	B	150.8/36.6
D851	1750000960	S.DIO RB081L-20	T	188.1/88.1
D852	1750000960	S.DIO RB081L-20	T	171/86.2
D871	1750000960	S.DIO RB081L-20	T	171.4/52.2
D872	1750000960	S.DIO RB081L-20	T	188.7/52.2
D901	1790000980	S.DIO MA742(TX)	B	161.5/33.9
D902	1790000980	S.DIO MA742(TX)	B	176.5/33.9
D903	1790000980	S.DIO MA742(TX)	B	164/33.9
D904	1790000980	S.DIO MA742(TX)	B	166.5/33.9
D905	1790000980	S.DIO MA742(TX)	B	169/33.9
D906	1790000980	S.DIO MA742(TX)	B	171.5/33.9
D907	1790000980	S.DIO MA742(TX)	B	174/33.9
D909	1790000980	S.DIO MA742(TX)	T	120.5/11.1
D910	1790000980	S.DIO MA742(TX)	T	120.5/13.6
D911	1790000980	S.DIO MA742(TX)	T	101.3/6.3
D912	1790000980	S.DIO MA742(TX)	T	101.3/3.8
D913	1790000980	S.DIO MA742(TX)	B	159.6/31.1
X101	6050011610	S.XTA CR-751 SMD-49 25.000 MHz	T	97.8/18.1
X201	6050010680	S.XTA CR-628 SMD-49 24.576 MHz	T	36.8/63.7
X202	6050011910	S.XTA CR-780 DSX530G 48 MHz	T	37.6/97.5
X601	6050011810	S.XTA CR-755 SMD-49 15.9744 MHz	T	126.6/65.3
L801	6200005011	S.COI NLV25T-100J	T	63/8
L803	6200005011	S.COI NLV25T-100J	B	157.1/32.2
L851	6200013280	S.COI SLF10145T-330M1R6-PF	T	196.3/89.3
L852	6200013280	S.COI SLF10145T-330M1R6-PF	T	164.1/83.7
L853	6200010881	S.COI CDRH124NP-330MC	T	192.9/77.3
L871	6200013280	S.COI SLF10145T-330M1R6-PF	T	164.6/53.5
L872	6200013280	S.COI SLF10145T-330M1R6-PF	T	196.9/49.9
L873	6200010881	S.COI CDRH124NP-330MC	T	193.4/62
R1	7030003520	S.RES ERJ3GEYJ 472 V (4.7K)	T	107.7/24.3
R51	7030003520	S.RES ERJ3GEYJ 472 V (4.7K)	T	130.2/45.4
R52	7030003560	S.RES ERJ3GEYJ 103 V (10K)	B	63.2/89.4
R53	7030003560	S.RES ERJ3GEYJ 103 V (10K)	B	109.6/87.6
R54	7030003560	S.RES ERJ3GEYJ 103 V (10K)	B	129.3/88.4
R61	7030003640	S.RES ERJ3GEYJ 473 V (47K)	T	53.6/30.4
R62	7030003640	S.RES ERJ3GEYJ 473 V (47K)	T	56.6/30.4
R91	7030003560	S.RES ERJ3GEYJ 103 V (10K)	T	53.6/43.8
R92	7030003560	S.RES ERJ3GEYJ 103 V (10K)	B	56.6/37.6
R93	7030003560	S.RES ERJ3GEYJ 103 V (10K)	T	56/50.4
R94	7030003560	S.RES ERJ3GEYJ 103 V (10K)	T	55.2/47.4
R95	7030003560	S.RES ERJ3GEYJ 103 V (10K)	T	56.4/47.4
R96	7030003560	S.RES ERJ3GEYJ 103 V (10K)	T	57.6/47.4
R97	7030003560	S.RES ERJ3GEYJ 103 V (10K)	T	57.2/50.4
R98	7030003560	S.RES ERJ3GEYJ 103 V (10K)	T	59.6/50.4
R99	7030003560	S.RES ERJ3GEYJ 103 V (10K)	T	58.8/47.4
R102	7030003560	S.RES ERJ3GEYJ 103 V (10K)	T	71/19
R103	7030003560	S.RES ERJ3GEYJ 103 V (10K)	T	68.6/19
R104	7030003560	S.RES ERJ3GEYJ 103 V (10K)	T	54.8/50.4
R105	7030003560	S.RES ERJ3GEYJ 103 V (10K)	T	58.4/50.4
R106	7030003560	S.RES ERJ3GEYJ 103 V (10K)	B	71/19
R107	7030003560	S.RES ERJ3GEYJ 103 V (10K)	T	67.4/19
R108	7030003560	S.RES ERJ3GEYJ 103 V (10K)	B	69.8/19
R109	7030003560	S.RES ERJ3GEYJ 103 V (10K)	T	69.8/16
R110	7030003560	S.RES ERJ3GEYJ 103 V (10K)	T	71/16
R111	7030003560	S.RES ERJ3GEYJ 103 V (10K)	T	72.2/19
R112	7030003560	S.RES ERJ3GEYJ 103 V (10K)	T	68.6/16
R113	7030003560	S.RES ERJ3GEYJ 103 V (10K)	T	65/16
R114	7030003560	S.RES ERJ3GEYJ 103 V (10K)	T	66.2/16
R115	7030003560	S.RES ERJ3GEYJ 103 V (10K)	T	66.2/19
R116	7030003560	S.RES ERJ3GEYJ 103 V (10K)	T	65/19
R117	7030003260	S.RES ERJ3GEYJ 330 V (33)	T	63.8/19
R118	7030003560	S.RES ERJ3GEYJ 103 V (10K)	T	63.8/16
R119	7030003560	S.RES ERJ3GEYJ 103 V (10K)	T	61.4/19
R120	7030003560	S.RES ERJ3GEYJ 103 V (10K)	B	56.6/24.4
R121	7030003560	S.RES ERJ3GEYJ 103 V (10K)	T	60.2/16
R122	7030003560	S.RES ERJ3GEYJ 103 V (10K)	T	61.4/16
R123	7030003560	S.RES ERJ3GEYJ 103 V (10K)	T	60.2/19
R125	7030003520	S.RES ERJ3GEYJ 472 V (4.7K)	T	67.4/16
R126	7030003560	S.RES ERJ3GEYJ 103 V (10K)	T	69.8/19
R128	7030003560	S.RES ERJ3GEYJ 103 V (10K)	T	72.2/16
R129	7030003560	S.RES ERJ3GEYJ 103 V (10K)	T	73.4/19
R130	7030003560	S.RES ERJ3GEYJ 103 V (10K)	B	73.4/19
R131	7030003560	S.RES ERJ3GEYJ 103 V (10K)	B	75.1/19
R132	7030003560	S.RES ERJ3GEYJ 103 V (10K)	B	72.2/19
R133	7030003560	S.RES ERJ3GEYJ 103 V (10K)	T	73.4/16
R134	7030003200	S.RES ERJ3GEYJ 100 V (10)	T	77.6/19

M.=Mounted side (T: Mounted on the Top side, B: Mounted on the Bottom side)
S.=Surface mount

[LOGIC UNIT]

REF NO.	PARTS NO.	DESCRIPTION	M.	H/V LOCATION
R135	7030003200	S.RES ERJ3GEYJ 100 V (10)	T	78.8/19
R136	7030003200	S.RES ERJ3GEYJ 100 V (10)	T	84/19
R139	7030003560	S.RES ERJ3GEYJ 103 V (10K)	T	60/47.4
R140	7410000990	S.ARR EXB-V8V 470JV (47)	T	66.2/47.5
R141	7410000990	S.ARR EXB-V8V 470JV (47)	T	62.5/47.5
R142	7410000990	S.ARR EXB-V8V 470JV (47)	T	73.6/47.5
R143	7410000990	S.ARR EXB-V8V 470JV (47)	T	81/47.5
R144	7410000990	S.ARR EXB-V8V 470JV (47)	T	69.9/47.5
R145	7410000990	S.ARR EXB-V8V 470JV (47)	T	77.3/47.5
R146	7030003280	S.RES ERJ3GEYJ 470 V (47)	T	87.2/47.4
R147	7030003280	S.RES ERJ3GEYJ 470 V (47)	T	88.5/47.4
R148	7410000990	S.ARR EXB-V8V 470JV (47)	T	84.7/47.5
R149	7410000990	S.ARR EXB-V8V 470JV (47)	T	87.6/19.5
R150	7410000990	S.ARR EXB-V8V 470JV (47)	T	87.6/23.2
R151	7410000990	S.ARR EXB-V8V 470JV (47)	T	87.6/26.9
R152	7410000990	S.ARR EXB-V8V 470JV (47)	T	87.6/30.6
R153	7030003200	S.RES ERJ3GEYJ 100 V (10)	T	83.1/32.7
R154	7410000990	S.ARR EXB-V8V 470JV (47)	T	83.2/35.2
R155	7410000990	S.ARR EXB-V8V 470JV (47)	T	83.2/38.9
R156	7410000990	S.ARR EXB-V8V 470JV (47)	T	83.2/42.6
R157	7410000800	S.ARR EXB-V8V 103JV (10K)	T	115.8/29.9
R158	7030003560	S.RES ERJ3GEYJ 103 V (10K)	T	115.9/38.6
R159	7030003560	S.RES ERJ3GEYJ 103 V (10K)	T	115.9/32.4
R161	7030003300	S.RES ERJ3GEYJ 680 V (68)	B	101.2/14.4
R164	7030003280	S.RES ERJ3GEYJ 470 V (47)	B	94.3/17
R171	7030003560	S.RES ERJ3GEYJ 103 V (10K)	B	56.6/25.6
R172	7030003560	S.RES ERJ3GEYJ 103 V (10K)	B	56.6/26.8
R173	7030003560	S.RES ERJ3GEYJ 103 V (10K)	B	56.6/28
R174	7030003560	S.RES ERJ3GEYJ 103 V (10K)	T	56.6/31.6
R175	7030003560	S.RES ERJ3GEYJ 103 V (10K)	B	56.6/29.2
R176	7030003560	S.RES ERJ3GEYJ 103 V (10K)	T	53.6/32.8
R177	7030003560	S.RES ERJ3GEYJ 103 V (10K)	T	56.6/32.8
R178	7030003560	S.RES ERJ3GEYJ 103 V (10K)	B	56.6/30.4
R179	7030003560	S.RES ERJ3GEYJ 103 V (10K)	T	53.6/34
R180	7030003560	S.RES ERJ3GEYJ 103 V (10K)	T	56.6/34
R181	7030003560	S.RES ERJ3GEYJ 103 V (10K)	T	53.6/35.2
R182	7030003560	S.RES ERJ3GEYJ 103 V (10K)	B	56.6/31.6
R183	7030003560	S.RES ERJ3GEYJ 103 V (10K)	T	56.6/36.4
R184	7030003560	S.RES ERJ3GEYJ 103 V (10K)	B	56.6/34
R185	7030003560	S.RES ERJ3GEYJ 103 V (10K)	B	56.6/35.2
R186	7030003560	S.RES ERJ3GEYJ 103 V (10K)	T	56.6/35.2
R187	7030003600	S.RES ERJ3GEYJ 223 V (22K)	B	56.6/32.8
R188	7030003560	S.RES ERJ3GEYJ 103 V (10K)	B	56.6/36.4
R189	7030003560	S.RES ERJ3GEYJ 103 V (10K)	T	53.6/42.6
R190	7030003560	S.RES ERJ3GEYJ 103 V (10K)	T	56.6/42.6
R191	7030003560	S.RES ERJ3GEYJ 103 V (10K)	T	56.6/43.8
R201	7030003560	S.RES ERJ3GEYJ 103 V (10K)	T	23.3/71.5
R202	7030003560	S.RES ERJ3GEYJ 103 V (10K)	T	23.3/72.7
R203	7030003560	S.RES ERJ3GEYJ 103 V (10K)	B	32.9/63.3
R204	7030003560	S.RES ERJ3GEYJ 103 V (10K)	B	31.7/63.3
R205	7030003560	S.RES ERJ3GEYJ 103 V (10K)	B	30.5/63.3
R206	7030003560	S.RES ERJ3GEYJ 103 V (10K)	T	26.5/73.9
R207	7030003560	S.RES ERJ3GEYJ 103 V (10K)	B	29.3/63.3
R208	7030003560	S.RES ERJ3GEYJ 103 V (10K)	B	34.1/63.3
R209	7030003560	S.RES ERJ3GEYJ 103 V (10K)	B	28.1/66.3
R210	7030003640	S.RES ERJ3GEYJ 473 V (47K)	T	54.9/73.4
R211	7030003640	S.RES ERJ3GEYJ 473 V (47K)	T	54.9/75.8
R212	7030003640	S.RES ERJ3GEYJ 473 V (47K)	T	54.9/74.6
R213	7030003680	S.RES ERJ3GEYJ 104 V (100K)	T	57.9/78.2
R218	7030003520	S.RES ERJ3GEYJ 472 V (4.7K)	B	30.3/95.7
R219	7030003520	S.RES ERJ3GEYJ 472 V (4.7K)	B	47.3/75.7
R220	7030003520	S.RES ERJ3GEYJ 472 V (4.7K)	B	44/84.5
R221	7030003560	S.RES ERJ3GEYJ 103 V (10K)	T	54.9/82.9
R225	7030003560	S.RES ERJ3GEYJ 103 V (10K)	B	44/79.3
R226	7030003560	S.RES ERJ3GEYJ 103 V (10K)	B	44/78
R227	7030003560	S.RES ERJ3GEYJ 103 V (10K)	B	48.4/65.6
R228	7030003560	S.RES ERJ3GEYJ 103 V (10K)	T	48.4/62.6
R229	7030003560	S.RES ERJ3GEYJ 103 V (10K)	T	49.6/65.6
R230	7030003560	S.RES ERJ3GEYJ 103 V (10K)	T	47.2/62.6
R231	7030003560	S.RES ERJ3GEYJ 103 V (10K)	T	48.4/65.6
R232	7030003560	S.RES ERJ3GEYJ 103 V (10K)	B	44.7/75.7
R233	7030003560	S.RES ERJ3GEYJ 103 V (10K)	B	47.2/65.6
R234	7030003560	S.RES ERJ3GEYJ 103 V (10K)	T	47.2/65.6
R235	7030003560	S.RES ERJ3GEYJ 103 V (10K)	T	46/62.6
R236	7030003560	S.RES ERJ3GEYJ 103 V (10K)	B	46/65.6
R237	7030003560	S.RES ERJ3GEYJ 103 V (10K)	B	43.4/75.7
R238	7030003560	S.RES ERJ3GEYJ 103 V (10K)	T	46/65.6
R239	7030003560	S.RES ERJ3GEYJ 103 V (10K)	T	44.8/62.6
R240	7030003560	S.RES ERJ3GEYJ 103 V (10K)	B	44.8/65.6
R241	7030003560	S.RES ERJ3GEYJ 103 V (10K)	B	42.1/75.7
R242	7030003560	S.RES ERJ3GEYJ 103 V (10K)	T	44.8/65.6
R243	7030003560	S.RES ERJ3GEYJ 103 V (10K)	B	40.8/75.7
R244	7030003560	S.RES ERJ3GEYJ 103 V (10K)	T	51.4/95.7
R245	7030003560	S.RES ERJ3GEYJ 103 V (10K)	T	57.4/95.7
R246	7030003560	S.RES ERJ3GEYJ 103 V (10K)	T	58.6/98.7
R247	7030003560	S.RES ERJ3GEYJ 103 V (10K)	B	41.4/84.5
R248	7030003560	S.RES ERJ3GEYJ 103 V (10K)	T	56.2/95.7
R249	7030003560	S.RES ERJ3GEYJ 103 V (10K)	T	61/95.7
R250	7030003560	S.RES ERJ3GEYJ 103 V (10K)	T	59.8/95.7
R251	7030003560	S.RES ERJ3GEYJ 103 V (10K)	T	57.4/98.7
R252	7030003560	S.RES ERJ3GEYJ 103 V (10K)	T	59.8/98.7
R253	7030003560	S.RES ERJ3GEYJ 103 V (10K)	B	47.6/95.7
R254	7030003560	S.RES ERJ3GEYJ 103 V (10K)	T	58.6/95.7
R255	7030003560	S.RES ERJ3GEYJ 103 V (10K)	T	61/98.7
R256	7030003560	S.RES ERJ3GEYJ 103 V (10K)	B	41.4/81.9
R257	7030003560	S.RES ERJ3GEYJ 103 V (10K)	T	55/95.7
R258	7030003560	S.RES ERJ3GEYJ 103 V (10K)	B	41.4/80.6
R259	7030003560	S.RES ERJ3GEYJ 103 V (10K)	T	55/98.7
R260	7030003560	S.RES ERJ3GEYJ 103 V (10K)	B	41.4/79.3
R261	7030003560	S.RES ERJ3GEYJ 103 V (10K)	T	52.6/98.7
R262	7030003560	S.RES ERJ3GEYJ 103 V (10K)	B	41.4/78
R263	7030003560	S.RES ERJ3GEYJ 103 V (10K)	B	43.5/95.7
R264	7030003560	S.RES ERJ3GEYJ 103 V (10K)	B	41.4/86.4
R265	7030003560	S.RES ERJ3GEYJ 103 V (10K)	T	51.4/98.7

[LOGIC UNIT]

REF NO.	PARTS NO.	DESCRIPTION	M.	H/V LOCATION
R266	7030003560	S.RES ERJ3GEYJ 103 V (10K)	T	53.8/98.7
R267	7030003560	S.RES ERJ3GEYJ 103 V (10K)	T	52.6/95.7
R268	7030003560	S.RES ERJ3GEYJ 103 V (10K)	B	44.7/95.7
R269	7030003560	S.RES ERJ3GEYJ 103 V (10K)	T	53.8/95.7
R270	7030003560	S.RES ERJ3GEYJ 103 V (10K)	T	56.2/98.7
R271	7030003560	S.RES ERJ3GEYJ 103 V (10K)	B	46.4/95.7
R272	7030003560	S.RES ERJ3GEYJ 103 V (10K)	B	32.7/95.7
R273	7030003560	S.RES ERJ3GEYJ 103 V (10K)	T	27.7/98.7
R274	7030003560	S.RES ERJ3GEYJ 103 V (10K)	B	38.2/78
R275	7030003560	S.RES ERJ3GEYJ 103 V (10K)	B	33.9/95.7
R276	7030003560	S.RES ERJ3GEYJ 103 V (10K)	T	27.7/95.7
R277	7030003560	S.RES ERJ3GEYJ 103 V (10K)	B	35.3/95.7
R278	7030003560	S.RES ERJ3GEYJ 103 V (10K)	T	28.9/98.7
R279	7030003560	S.RES ERJ3GEYJ 103 V (10K)	B	38.2/79.3
R280	7030003560	S.RES ERJ3GEYJ 103 V (10K)	B	31.5/95.7
R281	7030003560	S.RES ERJ3GEYJ 103 V (10K)	B	37.5/83.8
R282	7030003560	S.RES ERJ3GEYJ 103 V (10K)	B	38.8/83.8
R283	7030003560	S.RES ERJ3GEYJ 103 V (10K)	T	32.5/98.7
R284	7030003560	S.RES ERJ3GEYJ 103 V (10K)	T	32.5/95.7
R285	7030003560	S.RES ERJ3GEYJ 103 V (10K)	B	38.2/80.6
R286	7030003560	S.RES ERJ3GEYJ 103 V (10K)	T	30.1/98.7
R287	7030003560	S.RES ERJ3GEYJ 103 V (10K)	T	30.1/95.7
R288	7030003560	S.RES ERJ3GEYJ 103 V (10K)	T	31.3/98.7
R289	7030003560	S.RES ERJ3GEYJ 103 V (10K)	T	31.3/95.7
R290	7030003560	S.RES ERJ3GEYJ 103 V (10K)	B	38.2/81.9
R291	7030003560	S.RES ERJ3GEYJ 103 V (10K)	T	28.9/95.7
R292	7030003560	S.RES ERJ3GEYJ 103 V (10K)	B	44/83.2
R293	7030003560	S.RES ERJ3GEYJ 103 V (10K)	B	44/81.9
R294	7030003560	S.RES ERJ3GEYJ 103 V (10K)	B	44/80.6
R295	7030003640	S.RES ERJ3GEYJ 473 V (47K)	B	41.4/83.2
R296	7030003560	S.RES ERJ3GEYJ 103 V (10K)	T	26.5/70.3
R297	7030003560	S.RES ERJ3GEYJ 103 V (10K)	T	26.5/66.7
R298	7030003560	S.RES ERJ3GEYJ 103 V (10K)	B	34.1/66.3
R299	7030003560	S.RES ERJ3GEYJ 103 V (10K)	T	26.5/67.9
R300	7030003560	S.RES ERJ3GEYJ 103 V (10K)	T	23.3/66.7
R301	7030003560	S.RES ERJ3GEYJ 103 V (10K)	B	32.9/66.3
R302	7030003560	S.RES ERJ3GEYJ 103 V (10K)	T	23.3/65.5
R303	7030003560	S.RES ERJ3GEYJ 103 V (10K)	B	31.7/66.3
R304	7030003560	S.RES ERJ3GEYJ 103 V (10K)	T	23.3/67.9
R305	7030003560	S.RES ERJ3GEYJ 103 V (10K)	T	26.5/69.1
R306	7030003560	S.RES ERJ3GEYJ 103 V (10K)	T	26.5/72.7
R307	7030003560	S.RES ERJ3GEYJ 103 V (10K)	T	23.3/70.3
R308	7030003560	S.RES ERJ3GEYJ 103 V (10K)	B	30.5/66.3
R309	7030003560	S.RES ERJ3GEYJ 103 V (10K)	T	23.3/69.1
R310	7030003860	S.RES ERJ3GE JPW V	T	54.9/77
R311	7030003560	S.RES ERJ3GEYJ 103 V (10K)	B	36.5/95.7
R312	7030003860	S.RES ERJ3GE JPW V	T	57.9/77
R315	7030003560	S.RES ERJ3GEYJ 103 V (10K)	T	26.5/65.5
R316	7030003560	S.RES ERJ3GEYJ 103 V (10K)	T	26.5/64.3
R317	7030003560	S.RES ERJ3GEYJ 103 V (10K)	T	23.3/64.3
R318	7030003560	S.RES ERJ3GEYJ 103 V (10K)	B	38.9/95.7
R319	7030003560	S.RES ERJ3GEYJ 103 V (10K)	B	37.7/95.7
R320	7030003560	S.RES ERJ3GEYJ 103 V (10K)	T	26.5/95.7
R322	7030003250	S.RES ERJ3GEYJ 270 V (27)	T	44.9/99.3
R323	7030003250	S.RES ERJ3GEYJ 270 V (27)	T	48.3/99.3
R324	7030003580	S.RES ERJ3GEYJ 153 V (15K)	T	46.1/99.3
R325	7030003580	S.RES ERJ3GEYJ 153 V (15K)	T	49.5/99.3
R330	7030003560	S.RES ERJ3GEYJ 103 V (10K)	T	66.4/100.2
R331	7030003560	S.RES ERJ3GEYJ 103 V (10K)	T	65.1/100.2
R332	7030003640	S.RES ERJ3GEYJ 473 V (47K)	B	87.3/5.4
R333	7030003640	S.RES ERJ3GEYJ 473 V (47K)	B	94.2/8
R334	7030003640	S.RES ERJ3GEYJ 473 V (47K)	T	90.9/8
R335	7030003280	S.RES ERJ3GEYJ 470 V (47)	B	87.3/9.5
R336	7030003640	S.RES ERJ3GEYJ 473 V (47K)	B	73.2/5.4
R337	7030003640	S.RES ERJ3GEYJ 473 V (47K)	B	80.1/8
R338	7030003640	S.RES ERJ3GEYJ 473 V (47K)	T	76.8/8
R339	7030003280	S.RES ERJ3GEYJ 470 V (47)	B	73.2/9.5
R340	7030003280	S.RES ERJ3GEYJ 470 V (47)	B	62.5/9.5
R341	7030003640	S.RES ERJ3GEYJ 473 V (47K)	B	67.9/11.3
R344	7030003520	S.RES ERJ3GEYJ 472 V (4.7K)	B	68.7/2.1
R347	7030003860	S.RES ERJ3GE JPW V	B	42.3/95.7
R348	7030003860	S.RES ERJ3GE JPW V	B	41/95.7
R350	7030003860	S.RES ERJ3GE JPW V	B	29.1/95.7
R351	7030003860	S.RES ERJ3GE JPW V	T	26.5/71.5
R361	7030003580	S.RES ERJ3GEYJ 153 V (15K)	T	42.4/96.6
R362	7030003580	S.RES ERJ3GEYJ 153 V (15K)	T	43.7/96.6
R601	7030003640	S.RES ERJ3GEYJ 473 V (47K)	B	149.4/82.4
R602	7030003640	S.RES ERJ3GEYJ 473 V (47K)	B	150.6/82.4
R606	7030003640	S.RES ERJ3GEYJ 473 V (47K)	B	126.6/64.6
R607	7030003350	S.RES ERJ3GEYJ 181 V (180)	B	126.6/65.8
R608	7030003520	S.RES ERJ3GEYJ 472 V (4.7K)	B	126.5/62.2
R609	7030003440	S.RES ERJ3GEYJ 102 V (1K)	T	132.6/83.1
R610	7030003440	S.RES ERJ3GEYJ 102 V (1K)	T	133.8/83.1
R611	7030003440	S.RES ERJ3GEYJ 102 V (1K)	T	135/83.1
R612	7030003440	S.RES ERJ3GEYJ 102 V (1K)	T	136.2/83.1
R613	7030003440	S.RES ERJ3GEYJ 102 V (1K)	T	137.4/83.1
R614	7030003440	S.RES ERJ3GEYJ 102 V (1K)	T	138.6/83.1
R615	7030003440	S.RES ERJ3GEYJ 102 V (1K)	T	139.8/83.1
R618	7030003800	S.RES ERJ3GEYJ 105 V (1M)	T	139.8/86
R619	7030003800	S.RES ERJ3GEYJ 105 V (1M)	T	138.6/86
R620	7030003800	S.RES ERJ3GEYJ 105 V (1M)	T	137.4/86
R621	7030003800	S.RES ERJ3GEYJ 105 V (1M)	T	136.2/86
R622	7030003800	S.RES ERJ3GEYJ 105 V (1M)	T	135/86
R623	7030003800	S.RES ERJ3GEYJ 105 V (1M)	T	133.8/86
R624	7030003800	S.RES ERJ3GEYJ 105 V (1M)	T	132.6/86
R626	7030003600	S.RES ERJ3GEYJ 223 V (22K)	B	148.2/82.4
R627	7030003640	S.RES ERJ3GEYJ 473 V (47K)	B	153/82.4
R628	7030003640	S.RES ERJ3GEYJ 473 V (47K)	B	151.8/82.4
R629	7030003640	S.RES ERJ3GEYJ 473 V (47K)	B	154.2/82.4
R630	7030003520	S.RES ERJ3GEYJ 472 V (4.7K)	T	116.1/52.4
R631	7030003520	S.RES ERJ3GEYJ 472 V (4.7K)	T	116.1/51.2
R632	7030003520	S.RES ERJ3GEYJ 472 V (4.7K)	T	116.1/50
R633	7030003520	S.RES ERJ3GEYJ 472 V (4.7K)	T	116.1/48.8
R634	7030003520	S.RES ERJ3GEYJ 472 V (4.7K)	T	116.1/47.6

M.=Mounted side (T: Mounted on the Top side, B: Mounted on the Bottom side)
S.=Surface mount

[LOGIC UNIT]

REF NO.	PARTS NO.	DESCRIPTION	M.	H/V LOCATION
R635	7030003520	S.RES ERJ3GEYJ 472 V (4.7K)	T	116.1/46.4
R636	7030003640	S.RES ERJ3GEYJ 473 V (47K)	T	145/87.4
R637	7030003640	S.RES ERJ3GEYJ 473 V (47K)	T	150.7/87.4
R639	7030003640	S.RES ERJ3GEYJ 473 V (47K)	T	151.9/90.7
R640	7030003640	S.RES ERJ3GEYJ 473 V (47K)	T	147.1/97.7
R641	7030003640	S.RES ERJ3GEYJ 473 V (47K)	T	145.9/97.7
R642	7030003640	S.RES ERJ3GEYJ 473 V (47K)	T	144.7/97.7
R643	7030003600	S.RES ERJ3GEYJ 223 V (22K)	B	154.4/67.6
R644	7030003560	S.RES ERJ3GEYJ 103 V (10K)	B	154.4/66.4
R645	7030003520	S.RES ERJ3GEYJ 472 V (4.7K)	B	154.5/54.9
R646	7030003720	S.RES ERJ3GEYJ 224 V (220K)	B	129.2/51.9
R647	7030003720	S.RES ERJ3GEYJ 224 V (220K)	B	131.6/51.9
R648	7030003720	S.RES ERJ3GEYJ 224 V (220K)	B	132.8/51.9
R649	7030003720	S.RES ERJ3GEYJ 224 V (220K)	B	134/51.9
R650	7030003720	S.RES ERJ3GEYJ 224 V (220K)	B	135.2/51.9
R651	7030003720	S.RES ERJ3GEYJ 224 V (220K)	B	136.4/51.9
R652	7030003720	S.RES ERJ3GEYJ 224 V (220K)	B	137.6/51.9
R653	7030003720	S.RES ERJ3GEYJ 224 V (220K)	B	138.8/51.9
R654	7030003520	S.RES ERJ3GEYJ 472 V (4.7K)	B	149.9/52
R655	7030003520	S.RES ERJ3GEYJ 472 V (4.7K)	B	148.7/52
R657	7030003720	S.RES ERJ3GEYJ 224 V (220K)	B	145.8/82.4
R660	7030003640	S.RES ERJ3GEYJ 473 V (47K)	B	155.4/82.4
R661	7030003560	S.RES ERJ3GEYJ 103 V (10K)	T	147.8/81.9
R662	7030003640	S.RES ERJ3GEYJ 473 V (47K)	B	126.6/63.4
R663	7030003640	S.RES ERJ3GEYJ 473 V (47K)	B	131.4/82.4
R664	7030003640	S.RES ERJ3GEYJ 473 V (47K)	B	147/82.4
R665	7030003560	S.RES ERJ3GEYJ 103 V (10K)	B	126.6/75
R666	7030003560	S.RES ERJ3GEYJ 103 V (10K)	B	126.6/73.6
R668	7030003640	S.RES ERJ3GEYJ 473 V (47K)	B	126.6/68.4
R669	7030003640	S.RES ERJ3GEYJ 473 V (47K)	B	139.8/82.4
R670	7030003640	S.RES ERJ3GEYJ 473 V (47K)	B	154.5/53.7
R671	7030003640	S.RES ERJ3GEYJ 473 V (47K)	B	154.5/52.5
R672	7030003640	S.RES ERJ3GEYJ 473 V (47K)	B	126.6/76.2
R674	7030003640	S.RES ERJ3GEYJ 473 V (47K)	B	154.5/58.5
R675	7030003640	S.RES ERJ3GEYJ 473 V (47K)	B	154.5/57.3
R677	7030003640	S.RES ERJ3GEYJ 473 V (47K)	B	126.6/58.6
R679	7030003640	S.RES ERJ3GEYJ 473 V (47K)	B	126.6/61
R681	7030003640	S.RES ERJ3GEYJ 473 V (47K)	B	126.6/59.8
R683	7030003640	S.RES ERJ3GEYJ 473 V (47K)	B	126.6/77.4
R684	7030003640	S.RES ERJ3GEYJ 473 V (47K)	B	154.4/68.8
R685	7030003640	S.RES ERJ3GEYJ 473 V (47K)	B	154.4/70
R687	7030003640	S.RES ERJ3GEYJ 473 V (47K)	B	126.6/72.4
R691	7030003640	S.RES ERJ3GEYJ 473 V (47K)	T	113.6/77.7
R692	7030003520	S.RES ERJ3GEYJ 472 V (4.7K)	B	129.3/24.6
R693	7030003520	S.RES ERJ3GEYJ 472 V (4.7K)	B	130.5/24.6
R694	7030003640	S.RES ERJ3GEYJ 473 V (47K)	B	144.6/82.4
R695	7030003640	S.RES ERJ3GEYJ 473 V (47K)	B	143.4/82.4
R696	7030003520	S.RES ERJ3GEYJ 472 V (4.7K)	B	126.9/24.6
R697	7030003520	S.RES ERJ3GEYJ 472 V (4.7K)	B	131.7/24.6
R698	7030003560	S.RES ERJ3GEYJ 103 V (10K)	B	143.9/52
R699	7030003520	S.RES ERJ3GEYJ 472 V (4.7K)	B	128.1/24.6
R700	7030003720	S.RES ERJ3GEYJ 224 V (220K)	B	142.2/82.4
R701	7030003860	S.RES ERJ3GE JPW V	B	154.5/56.1
R711	7030003670	S.RES ERJ3GEYJ 823 V (82K)	B	154.5/62.1
R712	7030003640	S.RES ERJ3GEYJ 473 V (47K)	B	154.5/60.9
R721	7030003680	S.RES ERJ3GEYJ 104 V (100K)	B	151.4/47.4
R722	7030003680	S.RES ERJ3GEYJ 104 V (100K)	B	150.2/47.4
R723	7030003680	S.RES ERJ3GEYJ 104 V (100K)	B	149/47.4
R724	7030003640	S.RES ERJ3GEYJ 473 V (47K)	B	152.9/41.9
R725	7030003560	S.RES ERJ3GEYJ 103 V (10K)	B	157.1/39.3
R726	7030003590	S.RES ERJ3GEYJ 183 V (18K)	B	157.1/42
R727	7030003570	S.RES ERJ3GEYJ 123 V (12K)	B	152.8/39.3
R731	7030003440	S.RES ERJ3GEYJ 102 V (1K)	B	144.9/39.8
R732	7030003440	S.RES ERJ3GEYJ 102 V (1K)	B	149.4/39.9
R733	7030003640	S.RES ERJ3GEYJ 473 V (47K)	B	144.9/38.6
R734	7030003800	S.RES ERJ3GEYJ 105 V (1M)	B	150.9/38.5
R801	7030003200	S.RES ERJ3GEYJ 100 V (10)	T	106.6/88.4
R802	7030003200	S.RES ERJ3GEYJ 100 V (10)	T	107.1/81.3
R803	7030003200	S.RES ERJ3GEYJ 100 V (10)	T	105.4/88.4
R804	7030003200	S.RES ERJ3GEYJ 100 V (10)	T	105.9/81.3
R805	7030003200	S.RES ERJ3GEYJ 100 V (10)	T	104.2/88.4
R806	7030003200	S.RES ERJ3GEYJ 100 V (10)	T	104.7/81.3
R807	7030003200	S.RES ERJ3GEYJ 100 V (10)	T	103.5/81.3
R808	7030003200	S.RES ERJ3GEYJ 100 V (10)	T	103/88.4
R809	7030003200	S.RES ERJ3GEYJ 100 V (10)	T	102.3/81.3
R810	7030003200	S.RES ERJ3GEYJ 100 V (10)	T	101.8/88.4
R811	7030003200	S.RES ERJ3GEYJ 100 V (10)	T	101.1/81.3
R812	7030003200	S.RES ERJ3GEYJ 100 V (10)	T	100.6/88.4
R813	7030003200	S.RES ERJ3GEYJ 100 V (10)	T	99.4/88.4
R814	7030003200	S.RES ERJ3GEYJ 100 V (10)	T	99.1/81.3
R815	7030003200	S.RES ERJ3GEYJ 100 V (10)	T	98.2/88.4
R816	7030003200	S.RES ERJ3GEYJ 100 V (10)	T	97.9/81.3
R817	7030003200	S.RES ERJ3GEYJ 100 V (10)	T	97/88.4
R818	7030003200	S.RES ERJ3GEYJ 100 V (10)	T	96.7/81.3
R819	7030003200	S.RES ERJ3GEYJ 100 V (10)	T	95.5/81.3
R822	7030003200	S.RES ERJ3GEYJ 100 V (10)	T	93.1/81.3
R823	7030003200	S.RES ERJ3GEYJ 100 V (10)	T	91.9/81.3
R851	7030003530	S.RES ERJ3GEYJ 562 V (5.6K)	T	181.8/97.1
R852	7030003530	S.RES ERJ3GEYJ 562 V (5.6K)	T	181.8/95.9
R853	7030003600	S.RES ERJ3GEYJ 223 V (22K)	T	177.9/95.9
R854	7030003670	S.RES ERJ3GEYJ 823 V (82K)	T	184.4/95.9
R855	7030003680	S.RES ERJ3GEYJ 104 V (100K)	T	175/95.9
R856	7030005451	S.RES ERA3YED 153V (15K)	T	181.8/94.7
R857	7030003560	S.RES ERJ3GEYJ 103 V (10K)	T	186.7/94.2
R858	7030003560	S.RES ERJ3GEYJ 103 V (10K)	T	173.1/94.2
R861	7030003520	S.RES ERJ3GEYJ 472 V (4.7K)	T	187/97.1
R862	7030003520	S.RES ERJ3GEYJ 472 V (4.7K)	T	172.4/97.1
R871	7030003600	S.RES ERJ3GEYJ 223 V (22K)	T	177.5/43.9
R872	7030003590	S.RES ERJ3GEYJ 183 V (18K)	T	181.9/42.1
R873	7030003680	S.RES ERJ3GEYJ 104 V (100K)	T	174.9/43.9
R874	7030003610	S.RES ERJ3GEYJ 273 V (27K)	T	185.8/43.8
R875	7030005451	S.RES ERA3YED 153V (15K)	T	177.5/45.2
R876	7030003560	S.RES ERJ3GEYJ 103 V (10K)	T	173/45.8
R877	7030003560	S.RES ERJ3GEYJ 103 V (10K)	T	183.9/45.1

[LOGIC UNIT]

REF NO.	PARTS NO.	DESCRIPTION	M.	H/V LOCATION
R881	7030003520	S.RES ERJ3GEYJ 472 V (4.7K)	T	173/43.2
R882	7030003520	S.RES ERJ3GEYJ 472 V (4.7K)	T	187.3/42.5
R903	7030003520	S.RES ERJ3GEYJ 472 V (4.7K)	B	147.9/8.6
R904	7030003520	S.RES ERJ3GEYJ 472 V (4.7K)	B	146.8/7.1
R906	7030003550	S.RES ERJ3GEYJ 822 V (8.2K)	B	146/9.4
R908	7030003540	S.RES ERJ3GEYJ 682 V (6.8K)	B	147.9/9.9
R909	7030003520	S.RES ERJ3GEYJ 472 V (4.7K)	B	146.8/11.2
R910	7030003860	S.RES ERJ3GE JPW V	T	132.8/22.8
R911	7030003550	S.RES ERJ3GEYJ 822 V (8.2K)	B	148.4/5.3
R912	7030003550	S.RES ERJ3GEYJ 822 V (8.2K)	B	148.4/2.7
R913	7030003410	S.RES ERJ3GEYJ 561 V (560)	B	136.2/13.3
R914	7030003690	S.RES ERJ3GEYJ 124 V (120K)	B	146/2.7
R915	7030003550	S.RES ERJ3GEYJ 822 V (8.2K)	B	136.2/10.7
R916	7030003520	S.RES ERJ3GEYJ 472 V (4.7K)	B	147.2/5.3
R917	7030003520	S.RES ERJ3GEYJ 472 V (4.7K)	B	146/5.3
R918	7030003520	S.RES ERJ3GEYJ 472 V (4.7K)	B	135/10.7
R919	7030003520	S.RES ERJ3GEYJ 472 V (4.7K)	B	136.2/8.1
R920	7030003860	S.RES ERJ3GE JPW V	B	150.8/5.3
R921	7030003860	S.RES ERJ3GE JPW V	B	135/8.1
R922	7030003560	S.RES ERJ3GEYJ 103 V (10K)	B	132.8/5.5
R923	7030003460	S.RES ERJ3GEYJ 152 V (1.5K)	B	132.8/2.9
R924	7030003470	S.RES ERJ3GEYJ 182 V (1.8K)	B	131.6/4.4
R925	7030003500	S.RES ERJ3GEYJ 332 V (3.3K)	B	130.4/5.5
R926	7030003480	S.RES ERJ3GEYJ 222 V (2.2K)	B	129/2.9
R927	7030003480	S.RES ERJ3GEYJ 222 V (2.2K)	B	135/2.9
R928	7030003480	S.RES ERJ3GEYJ 222 V (2.2K)	B	136.2/5.5
R929	7030003560	S.RES ERJ3GEYJ 103 V (10K)	B	136.2/2.9
R930	7030003380	S.RES ERJ3GEYJ 331 V (330)	T	143.1/13.7
R931	7030003560	S.RES ERJ3GEYJ 103 V (10K)	B	132.8/8.1
R932	7030003460	S.RES ERJ3GEYJ 152 V (1.5K)	B	132.8/10.7
R933	7030003470	S.RES ERJ3GEYJ 182 V (1.8K)	B	131.6/9.2
R934	7030003500	S.RES ERJ3GEYJ 332 V (3.3K)	B	130.4/8.1
R935	7030003480	S.RES ERJ3GEYJ 222 V (2.2K)	B	129/10.7
R936	7030003380	S.RES ERJ3GEYJ 331 V (330)	T	143.9/12.5
R937	7030003410	S.RES ERJ3GEYJ 561 V (560)	B	118/10.5
R938	7030003700	S.RES ERJ3GEYJ 154 V (150K)	B	119.2/10.5
R939	7030003520	S.RES ERJ3GEYJ 472 V (4.7K)	T	143.9/11.3
R940	7030003520	S.RES ERJ3GEYJ 472 V (4.7K)	B	119.2/7.9
R941	7030003410	S.RES ERJ3GEYJ 561 V (560)	B	118/2.7
R942	7030003550	S.RES ERJ3GEYJ 822 V (8.2K)	B	119.2/2.7
R943	7030003520	S.RES ERJ3GEYJ 472 V (4.7K)	T	143.9/10.1
R944	7030003520	S.RES ERJ3GEYJ 472 V (4.7K)	B	119.2/5.3
R945	7030008240	S.RES ERJ12Y0R00U	T	148.4/24.1
R946	7030003320	S.RES ERJ3GEYJ 101 V (100)	T	138/8.8
R947	7030003320	S.RES ERJ3GEYJ 101 V (100)	T	141.2/8.8
R948	7030003320	S.RES ERJ3GEYJ 101 V (100)	T	121.6/8.4
R949	7030003320	S.RES ERJ3GEYJ 101 V (100)	T	124.8/8.4
R953	7030003860	S.RES ERJ3GE JPW V	B	132.1/19
R1001	7030003200	S.RES ERJ3GEYJ 100 V (10)	T	161.9/26.1
R1002	7030003200	S.RES ERJ3GEYJ 100 V (10)	T	165.1/29.4
R1003	7030003200	S.RES ERJ3GEYJ 100 V (10)	T	165.5/26.1
R1004	7030003200	S.RES ERJ3GEYJ 100 V (10)	T	166.5/29.4
R1005	7030003200	S.RES ERJ3GEYJ 100 V (10)	T	166.9/26.1
R1006	7030003200	S.RES ERJ3GEYJ 100 V (10)	T	167.8/29.4
R1007	7030003200	S.RES ERJ3GEYJ 100 V (10)	T	168.3/26.1
R1008	7030003200	S.RES ERJ3GEYJ 100 V (10)	T	169.2/29.4
R1009	7030003440	S.RES ERJ3GEYJ 102 V (1K)	T	169.7/26.1
R1010	7030003200	S.RES ERJ3GEYJ 100 V (10)	T	170.5/29.4
R1011	7030003200	S.RES ERJ3GEYJ 100 V (10)	T	171.1/26.1
R1012	7030003200	S.RES ERJ3GEYJ 100 V (10)	T	171.8/29.4
R1013	7030003200	S.RES ERJ3GEYJ 100 V (10)	T	172.5/26.1
R1014	7030003200	S.RES ERJ3GEYJ 100 V (10)	T	173.1/29.5
R1015	7030003200	S.RES ERJ3GEYJ 100 V (10)	T	173.9/26.5
R1016	7030003200	S.RES ERJ3GEYJ 100 V (10)	T	174.4/29.7
R1017	7030003200	S.RES ERJ3GEYJ 100 V (10)	T	175.3/27
R1018	7030003200	S.RES ERJ3GEYJ 100 V (10)	T	176/30.3
R1019	7030003200	S.RES ERJ3GEYJ 100 V (10)	T	176.7/27.3
R1020	7030003200	S.RES ERJ3GEYJ 100 V (10)	T	177.9/30
R1021	7030003200	S.RES ERJ3GEYJ 100 V (10)	T	178.1/27.4
R1022	7030003200	S.RES ERJ3GEYJ 100 V (10)	T	179.5/26.7
R1023	7030003200	S.RES ERJ3GEYJ 100 V (10)	T	180.5/29.6
R1024	7030003200	S.RES ERJ3GEYJ 100 V (10)	T	180.9/26.4
R1025	7030003200	S.RES ERJ3GEYJ 100 V (10)	T	181.8/29.6
R1026	7030003200	S.RES ERJ3GEYJ 100 V (10)	T	182.3/26.1
R1027	7030003200	S.RES ERJ3GEYJ 100 V (10)	T	183.1/29.6
R1028	7030003200	S.RES ERJ3GEYJ 100 V (10)	T	183.7/26.1
R1029	7030003200	S.RES ERJ3GEYJ 100 V (10)	T	184.4/29.6
R1031	7030003200	S.RES ERJ3GEYJ 100 V (10)	T	188/25
R1032	7030003680	S.RES ERJ3GEYJ 104 V (100K)	T	188.5/28
R1033	7030003670	S.RES ERJ3GEYJ 823 V (82K)	T	190.1/26.2
R1101	7030003200	S.RES ERJ3GEYJ 100 V (10)	T	155.9/8.5
R1102	7030003200	S.RES ERJ3GEYJ 100 V (10)	T	156.2/11.8
R1103	7030003200	S.RES ERJ3GEYJ 100 V (10)	T	157.3/8.5
R1104	7030003200	S.RES ERJ3GEYJ 100 V (10)	T	158/11.8
R1105	7030003200	S.RES ERJ3GEYJ 100 V (10)	T	158.7/8.5
R1106	7030003200	S.RES ERJ3GEYJ 100 V (10)	T	159.4/11.8
R1107	7030003200	S.RES ERJ3GEYJ 100 V (10)	T	160.1/8.5
R1108	7030003200	S.RES ERJ3GEYJ 100 V (10)	T	160.8/11.8
R1109	7030003200	S.RES ERJ3GEYJ 100 V (10)	T	161.5/8.5
R1110	7030003200	S.RES ERJ3GEYJ 100 V (10)	T	162.2/11.8
R1111	7030003200	S.RES ERJ3GEYJ 100 V (10)	T	162.9/8.5
R1112	7030003200	S.RES ERJ3GEYJ 100 V (10)	T	163.6/11.8
R1113	7030003200	S.RES ERJ3GEYJ 100 V (10)	T	164.3/8.5
R1114	7030003200	S.RES ERJ3GEYJ 100 V (10)	T	165/11.8
R1115	7030003200	S.RES ERJ3GEYJ 100 V (10)	T	165.7/8.5
R1116	7030003200	S.RES ERJ3GEYJ 100 V (10)	T	166.4/11.8
R1117	7030003200	S.RES ERJ3GEYJ 100 V (10)	T	167.1/8.5
R1118	7030003440	S.RES ERJ3GEYJ 102 V (1K)	T	162.8/16.1
R1119	7030003200	S.RES ERJ3GEYJ 100 V (10)	T	164/15.6
R1120	7030003200	S.RES ERJ3GEYJ 100 V (10)	T	165.2/16.1
R1121	7030003200	S.RES ERJ3GEYJ 100 V (10)	T	166.4/16.1
R1122	7030003200	S.RES ERJ3GEYJ 100 V (10)	T	167.6/16.1
R1123	7030003200	S.RES ERJ3GEYJ 100 V (10)	T	168.8/15.3
R1124	7030003200	S.RES ERJ3GEYJ 100 V (10)	T	170/16.1

M.=Mounted side (T: Mounted on the Top side, B: Mounted on the Bottom side)
S.=Surface mount

[LOGIC UNIT]

REF NO.	PARTS NO.	DESCRIPTION	M.	H/V LOCATION
R1125	7030003200	S.RES ERJ3GEYJ 100 V (10)	T	171.2/16.1
R1126	7030003200	S.RES ERJ3GEYJ 100 V (10)	T	172.4/16.1
R1127	7030003200	S.RES ERJ3GEYJ 100 V (10)	T	173.6/16.1
R1128	7030003200	S.RES ERJ3GEYJ 100 V (10)	T	174.8/16.1
R1129	7030003200	S.RES ERJ3GEYJ 100 V (10)	T	176/16.1
R1130	7030003200	S.RES ERJ3GEYJ 100 V (10)	T	177.2/16.1
R1131	7030003200	S.RES ERJ3GEYJ 100 V (10)	T	172.8/8.5
R1132	7030003200	S.RES ERJ3GEYJ 100 V (10)	T	173.5/11.8
R1133	7030003200	S.RES ERJ3GEYJ 100 V (10)	T	174.2/8.5
R1134	7030003200	S.RES ERJ3GEYJ 100 V (10)	T	174.9/11.8
R1135	7030003200	S.RES ERJ3GEYJ 100 V (10)	T	175.6/8.5
R1136	7030003200	S.RES ERJ3GEYJ 100 V (10)	T	176.3/11.8
R1137	7030003200	S.RES ERJ3GEYJ 100 V (10)	T	177/8.5
R1138	7030003200	S.RES ERJ3GEYJ 100 V (10)	T	177.7/11.8
R1139	7030003200	S.RES ERJ3GEYJ 100 V (10)	T	178.4/8.5
R1140	7030003200	S.RES ERJ3GEYJ 100 V (10)	T	179.1/11.8
R1141	7030003200	S.RES ERJ3GEYJ 100 V (10)	T	179.8/8.5
R1142	7030003200	S.RES ERJ3GEYJ 100 V (10)	T	180.5/11.8
R1143	7030003200	S.RES ERJ3GEYJ 100 V (10)	T	181.2/8.5
R1144	7030003200	S.RES ERJ3GEYJ 100 V (10)	T	181.9/11.8
R1145	7030003200	S.RES ERJ3GEYJ 100 V (10)	T	182.6/8.5
R1146	7030003200	S.RES ERJ3GEYJ 100 V (10)	T	183.3/11.8
R1147	7030003200	S.RES ERJ3GEYJ 100 V (10)	T	184/8.5
R1148	7030003200	S.RES ERJ3GEYJ 100 V (10)	T	184.7/11.8
C1	4030011600	S.CER C1608 JB 1E 104K-T	T	98.1/55.4
C2	4030011600	S.CER C1608 JB 1E 104K-T	T	101/55.4
C3	4030011600	S.CER C1608 JB 1E 104K-T	T	105.7/55.4
C4	4030011600	S.CER C1608 JB 1E 104K-T	T	108.3/55.4
C5	4030011600	S.CER C1608 JB 1E 104K-T	T	120.2/55.4
C6	4030011600	S.CER C1608 JB 1E 104K-T	T	108.2/69.8
C7	4030011600	S.CER C1608 JB 1E 104K-T	T	103.4/69.8
C8	4030011600	S.CER C1608 JB 1E 104K-T	T	73.5/55.4
C9	4030011600	S.CER C1608 JB 1E 104K-T	T	76.1/55.4
C10	4030011600	S.CER C1608 JB 1E 104K-T	T	80.8/55.4
C11	4030011600	S.CER C1608 JB 1E 104K-T	T	83.4/55.4
C12	4030011600	S.CER C1608 JB 1E 104K-T	T	95.3/55.4
C13	4030011600	S.CER C1608 JB 1E 104K-T	T	83.3/69.8
C14	4030011600	S.CER C1608 JB 1E 104K-T	T	78.5/69.8
C21	4030011600	S.CER C1608 JB 1E 104K-T	T	106.7/49.9
C22	4030011600	S.CER C1608 JB 1E 104K-T	T	104.2/24.3
C23	4030011600	S.CER C1608 JB 1E 104K-T	T	101.2/24.3
C51	4030011600	S.CER C1608 JB 1E 104K-T	B	118.5/77.6
C52	4030011600	S.CER C1608 JB 1E 104K-T	B	121.1/77.6
C53	4030011600	S.CER C1608 JB 1E 104K-T	B	129.3/85.8
C61	4030009990	S.CER C1608 CH 1H 200J-T	T	131.4/45.4
C62	4030011600	S.CER C1608 JB 1E 104K-T	B	63.9/91.8
C63	4030008880	S.CER C1608 JB 1H 223K-T	B	66.1/87.1
C64	4030011600	S.CER C1608 JB 1E 104K-T	B	60.9/90.5
C65	4030011600	S.CER C1608 JB 1E 104K-T	B	57.9/89.8
C66	4550007470	S.TAN F931A107MNMBMA	B	54.4/96.1
C101	4030011600	S.CER C1608 JB 1E 104K-T	B	101.2/17
C102	4030011600	S.CER C1608 JB 1E 104K-T	T	62.6/19
C103	4030011600	S.CER C1608 JB 1E 104K-T	B	67/39.8
C104	4030011600	S.CER C1608 JB 1E 104K-T	T	60.8/50.4
C105	4030011600	S.CER C1608 JB 1E 104K-T	B	74/30.3
C106	4030011600	S.CER C1608 JB 1E 104K-T	B	66.3/26.9
C107	4030011600	S.CER C1608 JB 1E 104K-T	B	67.5/26.9
C108	4030011600	S.CER C1608 JB 1E 104K-T	B	70.4/33.9
C109	4030011600	S.CER C1608 JB 1E 104K-T	B	74.6/26.9
C110	4030011600	S.CER C1608 JB 1E 104K-T	B	67.5/33.7
C111	4030019500	S.CER GRM21BB31A106KE18 (GRM40 B)	T	76.1/16.8
C112	4030011600	S.CER C1608 JB 1E 104K-T	T	77.6/16.4
C113	4030019500	S.CER GRM21BB31A106KE18 (GRM40 B)	T	80.4/17.8
C114	4030011600	S.CER C1608 JB 1E 104K-T	T	78.8/16.4
C115	4030019500	S.CER GRM21BB31A106KE18 (GRM40 B)	T	82.4/17.8
C116	4030011600	S.CER C1608 JB 1E 104K-T	T	84/16.4
C117	4030011600	S.CER C1608 JB 1E 104K-T	B	68.2/39.8
C118	4030011600	S.CER C1608 JB 1E 104K-T	B	66.8/30.3
C119	4030011600	S.CER C1608 JB 1E 104K-T	B	61.7/27.8
C120	4030011600	S.CER C1608 JB 1E 104K-T	B	73.4/33.7
C121	4030011600	S.CER C1608 JB 1E 104K-T	B	74.6/33.7
C122	4030011600	S.CER C1608 JB 1E 104K-T	B	71.7/33.9
C123	4030006860	S.CER C1608 JB 1H 102K-T	B	61.7/32.5
C124	4030011600	S.CER C1608 JB 1E 104K-T	B	66.3/33.7
C125	4030011600	S.CER C1608 JB 1E 104K-T	B	69.1/33.9
C126	4030011600	S.CER C1608 JB 1E 104K-T	B	66.8/31.6
C127	4030011600	S.CER C1608 JB 1E 104K-T	B	73.4/39.8
C128	4030011600	S.CER C1608 JB 1E 104K-T	B	79.9/27.3
C129	4030011600	S.CER C1608 JB 1E 104K-T	B	66.8/29
C130	4030011600	S.CER C1608 JB 1E 104K-T	B	74.6/39.8
C131	4030011600	S.CER C1608 JB 1E 104K-T	B	79.9/32.5
C132	4030011600	S.CER C1608 JB 1E 104K-T	B	79.9/33.7
C133	4030011600	S.CER C1608 JB 1E 104K-T	B	74/31.6
C134	4030011600	S.CER C1608 JB 1E 104K-T	B	64.7/21.5
C135	4030011600	S.CER C1608 JB 1E 104K-T	T	62.6/16
C136	4030011600	S.CER C1608 JB 1E 104K-T	B	73.4/26.9
C137	4030011600	S.CER C1608 JB 1E 104K-T	B	67.3/21.5
C138	4030011600	S.CER C1608 JB 1E 104K-T	B	61.7/35.2
C139	4030011600	S.CER C1608 JB 1E 104K-T	B	79.9/26.1
C140	4030011600	S.CER C1608 JB 1E 104K-T	B	74/29
C141	4030011600	S.CER C1608 JB 1E 104K-T	T	115.9/37.4
C142	4030011600	S.CER C1608 JB 1E 104K-T	T	115.9/39.8
C143	4550007470	S.TAN F931A107MNMBMA	B	84.4/18.1
C201	4030011600	S.CER C1608 JB 1E 104K-T	T	1.7/91.3
C202	4030011600	S.CER C1608 JB 1E 104K-T	T	1.7/88.2
C203	4030011600	S.CER C1608 JB 1E 104K-T	T	1.7/84.9
C204	4030011600	S.CER C1608 JB 1E 104K-T	T	1.7/80.9
C205	4030011600	S.CER C1608 JB 1E 104K-T	T	1.7/69
C206	4030011600	S.CER C1608 JB 1E 104K-T	T	16.1/81

[LOGIC UNIT]

REF NO.	PARTS NO.	DESCRIPTION	M.	H/V LOCATION
C207	4030011600	S.CER C1608 JB 1E 104K-T	T	16.1/85.8
C208	4030011600	S.CER C1608 JB 1E 104K-T	B	19.6/68.1
C209	4030011600	S.CER C1608 JB 1E 104K-T	B	22/80.9
C210	4030011600	S.CER C1608 JB 1E 104K-T	B	22/84.9
C211	4030011600	S.CER C1608 JB 1E 104K-T	B	22/88.2
C212	4030011600	S.CER C1608 JB 1E 104K-T	B	16.2/92.2
C213	4030011600	S.CER C1608 JB 1E 104K-T	B	7.6/85.8
C214	4030011600	S.CER C1608 JB 1E 104K-T	B	7.6/81
C215	4030011600	S.CER C1608 JB 1E 104K-T	B	48.2/69.6
C216	4030011600	S.CER C1608 JB 1E 104K-T	B	49/92.4
C217	4030011600	S.CER C1608 JB 1E 104K-T	B	46.6/79.3
C218	4030011600	S.CER C1608 JB 1E 104K-T	B	46/86.4
C219	4030011600	S.CER C1608 JB 1E 104K-T	B	43.4/86.4
C220	4030011600	S.CER C1608 JB 1E 104K-T	B	47.3/86.4
C221	4030011600	S.CER C1608 JB 1E 104K-T	B	42.4/92.5
C222	4030011600	S.CER C1608 JB 1E 104K-T	B	44.7/69.6
C223	4030011600	S.CER C1608 JB 1E 104K-T	B	50.8/69.6
C224	4030011600	S.CER C1608 JB 1E 104K-T	B	53.1/75.6
C225	4030011600	S.CER C1608 JB 1E 104K-T	B	46.6/81.9
C226	4030011600	S.CER C1608 JB 1E 104K-T	B	46.6/83.2
C227	4030011600	S.CER C1608 JB 1E 104K-T	B	40.1/86.4
C228	4030011600	S.CER C1608 JB 1E 104K-T	B	46.6/84.5
C229	4030011600	S.CER C1608 JB 1E 104K-T	B	37.8/69.6
C230	4030011600	S.CER C1608 JB 1E 104K-T	B	39.5/75.7
C231	4030011600	S.CER C1608 JB 1E 104K-T	B	35.6/75.4
C232	4030011600	S.CER C1608 JB 1E 104K-T	B	46.6/78
C233	4030011600	S.CER C1608 JB 1E 104K-T	B	35.6/80.5
C234	4030011600	S.CER C1608 JB 1E 104K-T	B	38.8/86.4
C235	4030011600	S.CER C1608 JB 1E 104K-T	B	35.5/92.5
C236	4030011600	S.CER C1608 JB 1E 104K-T	B	35.6/76.7
C237	4030011600	S.CER C1608 JB 1E 104K-T	B	35.6/78
C238	4030011600	S.CER C1608 JB 1E 104K-T	B	35.6/79.3
C239	4030011600	S.CER C1608 JB 1E 104K-T	B	53.1/76.8
C240	4030011600	S.CER C1608 JB 1E 104K-T	B	35.6/83.2
C241	4030011600	S.CER C1608 JB 1E 104K-T	B	35.6/84.5
C242	4030011600	S.CER C1608 JB 1E 104K-T	B	35.6/85.7
C243	4030011600	S.CER C1608 JB 1E 104K-T	B	35.6/87
C244	4030011600	S.CER C1608 JB 1E 104K-T	B	46.6/80.6
C245	4030011600	S.CER C1608 JB 1E 104K-T	B	46/75.7
C246	4030011600	S.CER C1608 JB 1E 104K-T	B	35.6/81.9
C247	4030011600	S.CER C1608 JB 1E 104K-T	B	38.2/75.7
C248	4030011600	S.CER C1608 JB 1E 104K-T	B	37.5/86.4
C249	4030011600	S.CER C1608 JB 1E 104K-T	B	44.7/86.4
C250	4030007050	S.CER C1608 CH 1H 220J-T	T	37.8/67
C251	4030007050	S.CER C1608 CH 1H 220J-T	T	40.4/67
C252	4030006990	S.CER C1608 CH 1H 080D-T	T	36.6/95
C253	4030006990	S.CER C1608 CH 1H 080D-T	T	39.2/95
C254	4030006900	S.CER C1608 JB 1H 103K-T	T	52/65.6
C255	4510008520	S.ELE EEE1CA470SP	T	57.1/68.5
C256	4030006900	S.CER C1608 JB 1H 103K-T	T	60.1/89
C257	4510007130	S.ELE EEFCD 0J 470R	T	58.1/86
C258	4030011600	S.CER C1608 JB 1E 104K-T	B	39.8/92.5
C259	4030011600	S.CER C1608 JB 1E 104K-T	B	52.5/80.9
C276	4030007050	S.CER C1608 CH 1H 220J-T	T	45.7/97.5
C277	4030007050	S.CER C1608 CH 1H 220J-T	T	49/97.5
C278	4510008500	S.ELE EEE1CA101WP	T	66.7/83
C283	4510008550	S.ELE EEE1HA010SR	T	65.5/89
C284	4030011600	S.CER C1608 JB 1E 104K-T	B	94.2/5.4
C285	4510008540	S.ELE EEE1CA100SR	T	96.5/3.7
C286	4510008540	S.ELE EEE1CA100SR	T	91.7/3.7
C287	4030011600	S.CER C1608 JB 1E 104K-T	B	88.8/2.1
C288	4510008540	S.ELE EEE1CA100SR	T	86.9/3.7
C289	4030011600	S.CER C1608 JB 1E 104K-T	B	91.4/2.1
C290	4030011600	S.CER C1608 JB 1E 104K-T	B	80.1/5.4
C291	4510008540	S.ELE EEE1CA100SR	T	82.1/3.7
C292	4510008540	S.ELE EEE1CA100SR	T	77.3/3.7
C293	4030011600	S.CER C1608 JB 1E 104K-T	B	77.3/2.1
C294	4510008540	S.ELE EEE1CA100SR	T	72.5/3.7
C295	4030011600	S.CER C1608 JB 1E 104K-T	B	74.7/2.1
C296	4030011600	S.CER C1608 JB 1E 104K-T	B	62.5/5.4
C297	4510008540	S.ELE EEE1CA100SR	T	62.9/3.7
C298	4030011600	S.CER C1608 JB 1E 104K-T	B	65.7/2.1
C299	4510008540	S.ELE EEE1CA100SR	T	67.7/3.7
C361	4030007050	S.CER C1608 CH 1H 220J-T	T	42.4/99.3
C362	4030007050	S.CER C1608 CH 1H 220J-T	T	43.7/99.3
C603	4030011600	S.CER C1608 JB 1E 104K-T	B	126.6/71
C604	4030011600	S.CER C1608 JB 1E 104K-T	B	126.6/69.8
C605	4030011600	S.CER C1608 JB 1E 104K-T	B	128/51.9
C606	4030011600	S.CER C1608 JB 1E 104K-T	B	154.5/73.6
C607	4030011600	S.CER C1608 JB 1E 104K-T	B	147.5/52
C608	4510008540	S.ELE EEE1CA100SR	T	131/74.8
C609	4510008540	S.ELE EEE1CA100SR	T	135.8/74.8
C610	4030006900	S.CER C1608 JB 1H 103K-T	T	130.9/78.3
C611	4030006900	S.CER C1608 JB 1H 103K-T	T	136.8/78.3
C612	4030007010	S.CER C1608 CH 1H 100D-T	T	129.9/68.9
C613	4030007010	S.CER C1608 CH 1H 100D-T	T	129.9/66.3
C614	4030011600	S.CER C1608 JB 1E 104K-T	B	126.6/67
C616	4030006900	S.CER C1608 JB 1H 103K-T	B	141/82.7
C617	4030006900	S.CER C1608 JB 1H 103K-T	B	138.6/82.7
C618	4030006900	S.CER C1608 JB 1H 103K-T	B	137.4/82.7
C619	4030006900	S.CER C1608 JB 1H 103K-T	B	136.2/82.7
C620	4030006900	S.CER C1608 JB 1H 103K-T	B	135/82.7
C621	4030006900	S.CER C1608 JB 1H 103K-T	B	133.8/82.7
C622	4030006900	S.CER C1608 JB 1H 103K-T	B	132.6/82.7
C626	4030011600	S.CER C1608 JB 1E 104K-T	T	146.2/87.4
C627	4030011600	S.CER C1608 JB 1E 104K-T	T	151.9/85.9
C628	4030011600	S.CER C1608 JB 1E 104K-T	T	113.6/72.6
C629	4030011600	S.CER C1608 JB 1E 104K-T	T	150.2/67.1
C630	4030011600	S.CER C1608 JB 1E 104K-T	B	122.4/32
C631	4030011600	S.CER C1608 JB 1E 104K-T	B	125.7/24.6
C632	4030011600	S.CER C1608 JB 1E 104K-T	B	132.9/24.6
C633	4030011600	S.CER C1608 JB 1E 104K-T	B	141.4/40.5
C634	4030011600	S.CER C1608 JB 1E 104K-T	B	141.4/37.5
C635	4030011600	S.CER C1608 JB 1E 104K-T	B	134.4/44.7

M.=Mounted side (T: Mounted on the Top side, B: Mounted on the Bottom side)
S.=Surface mount

[LOGIC UNIT]

REF NO.	PARTS NO.	DESCRIPTION	M.	H/V LOCATION
C636	4030011600	S.CER C1608 JB 1E 104K-T	B	125.2/46.1
C656	4030011600	S.CER C1608 JB 1E 104K-T	B	145.1/52
C661	4030011600	S.CER C1608 JB 1E 104K-T	T	149.7/77.5
C698	4510008540	S.ELE EEE1CA100SR	T	144/54.4
C711	4030006900	S.CER C1608 JB 1H 103K-T	B	154.5/59.7
C721	4030011600	S.CER C1608 JB 1E 104K-T	B	152.9/44.5
C731	4030006900	S.CER C1608 JB 1H 103K-T	B	147.8/38.6
C732	4030006900	S.CER C1608 JB 1H 103K-T	B	144.9/41
C801	4030006860	S.CER C1608 JB 1H 102K-T	B	83.3/88.1
C802	4030006860	S.CER C1608 JB 1H 102K-T	B	80.6/88.3
C803	4030006860	S.CER C1608 JB 1H 102K-T	T	82.2/76.8
C804	4030006860	S.CER C1608 JB 1H 102K-T	T	79.8/76.8
C805	4030006860	S.CER C1608 JB 1H 102K-T	T	78.4/76.9
C806	4030006860	S.CER C1608 JB 1H 102K-T	T	76.9/76.9
C807	4030006860	S.CER C1608 JB 1H 102K-T	T	75.6/78
C808	4030006860	S.CER C1608 JB 1H 102K-T	B	75.8/88.3
C809	4030006860	S.CER C1608 JB 1H 102K-T	B	72.7/88.3
C810	4030019500	S.CER GRM21BB31A106KE18 (GRM40 B)	B	67.4/95.1
C811	4030019500	S.CER GRM21BB31A106KE18 (GRM40 B)	B	152.5/28.9
C812	4030019500	S.CER GRM21BB31A106KE18 (GRM40 B)	T	65.7/9
C851	4030007070	S.CER C1608 CH 1H 330J-T	T	184.4/97.1
C852	4030007070	S.CER C1608 CH 1H 330J-T	T	175/97.1
C853	4030008650	S.CER C1608 JB 1H 332K-T	T	184.8/94.7
C854	4030008650	S.CER C1608 JB 1H 332K-T	T	175/94.7
C855	4030007130	S.CER C1608 CH 1H 101J-T	T	184.8/93.4
C856	4030007130	S.CER C1608 CH 1H 101J-T	T	175/93.4
C857	4030011600	S.CER C1608 JB 1E 104K-T	T	181.8/93.4
C858	4030011600	S.CER C1608 JB 1E 104K-T	T	178/94.5
C859	4030011600	S.CER C1608 JB 1E 104K-T	T	184.7/82.7
C860	4030011600	S.CER C1608 JB 1E 104K-T	T	174.3/82.7
C861	4030011600	S.CER C1608 JB 1E 104K-T	T	181.3/82.8
C862	4550007900	S.TAN F931E476MNC	T	178.9/74.8
C863	4030018970	S.CER C3225 JB 1C 226MT-N	T	177.1/80.6
C864	4030019500	S.CER GRM21BB31A106KE18 (GRM40 B)	T	169.7/94.1
C865	4030019500	S.CER GRM21BB31A106KE18 (GRM40 B)	T	190/94.4
C866	4030019500	S.CER GRM21BB31A106KE18 (GRM40 B)	T	197.7/96.2
C867	4030019500	S.CER GRM21BB31A106KE18 (GRM40 B)	T	161.9/96.9
C868	4030019500	S.CER GRM21BB31A106KE18 (GRM40 B)	T	197.7/98
C869	4030019500	S.CER GRM21BB31A106KE18 (GRM40 B)	T	188.2/94.4
C870	4030019500	S.CER GRM21BB31A106KE18 (GRM40 B)	T	171.5/94.1
C871	4030007070	S.CER C1608 CH 1H 330J-T	T	174.9/42.6
C872	4030007070	S.CER C1608 CH 1H 330J-T	T	184.7/42.5
C873	4030008650	S.CER C1608 JB 1H 332K-T	T	174.9/45.2
C874	4030008650	S.CER C1608 JB 1H 332K-T	T	182.1/43.4
C875	4030007130	S.CER C1608 CH 1H 101J-T	T	174.9/46.5
C876	4030007130	S.CER C1608 CH 1H 101J-T	T	182.1/44.7
C877	4030011600	S.CER C1608 JB 1E 104K-T	T	178.1/46.5
C878	4030011600	S.CER C1608 JB 1E 104K-T	T	180.7/46
C879	4030011600	S.CER C1608 JB 1E 104K-T	T	174.9/57.7
C880	4030011600	S.CER C1608 JB 1E 104K-T	T	185.3/57.7
C881	4030011600	S.CER C1608 JB 1E 104K-T	T	178.7/57.7
C882	4550007900	S.TAN F931E476MNC	T	179.4/66
C883	4030018970	S.CER C3225 JB 1C 226MT-N	T	182.6/59.9
C884	4030019500	S.CER GRM21BB31A106KE18 (GRM40 B)	T	187.2/46
C885	4030019500	S.CER GRM21BB31A106KE18 (GRM40 B)	T	169.5/46.2
C886	4030019500	S.CER GRM21BB31A106KE18 (GRM40 B)	T	161.2/45
C887	4030019500	S.CER GRM21BB31A106KE18 (GRM40 B)	T	195.3/41.4
C888	4030019500	S.CER GRM21BB31A106KE18 (GRM40 B)	T	161.9/95.1
C889	4030019500	S.CER GRM21BB31A106KE18 (GRM40 B)	T	161.2/43.2
C890	4030019500	S.CER GRM21BB31A106KE18 (GRM40 B)	T	171.3/46.2
C891	4030019500	S.CER GRM21BB31A106KE18 (GRM40 B)	T	185.5/46
C892	4030019500	S.CER GRM21BB31A106KE18 (GRM40 B)	T	195.3/43.1
C893	4030018970	S.CER C3225 JB 1C 226MT-N	T	181.7/80.6
C894	4030018970	S.CER C3225 JB 1C 226MT-N	T	177.6/59.9
C895	4030019500	S.CER GRM21BB31A106KE18 (GRM40 B)	T	189/46
C896	4030019500	S.CER GRM21BB31A106KE18 (GRM40 B)	T	190.7/46
C897	4030019500	S.CER GRM21BB31A106KE18 (GRM40 B)	T	167.9/91.7
C898	4030019500	S.CER GRM21BB31A106KE18 (GRM40 B)	T	167.9/89.9
C904	4030019320	S.CER C1608 X7R 1C 105K-T	B	149.4/11.2
C906	4030009880	S.CER C1608 JB 1H 682K-T	B	149.6/2.7
C907	4510008540	S.ELE EEE1CA100SR	T	124.9/13.5
C908	4030008880	S.CER C1608 JB 1H 223K-T	B	150.8/2.7
C909	4030007160	S.CER C1608 CH 1H 181J-T	B	147.2/2.7
C910	4510008540	S.ELE EEE1CA100SR	T	131/2.6
C911	4030009490	S.CER C1608 JB 1H 821K-T	B	129/5.5
C912	4030009490	S.CER C1608 JB 1H 821K-T	B	130.4/2.9
C913	4510008540	S.ELE EEE1CA100SR	T	131/7.4
C914	4030009490	S.CER C1608 JB 1H 821K-T	B	129/8.1
C915	4030009490	S.CER C1608 JB 1H 821K-T	B	130.4/10.7
C916	4510008540	S.ELE EEE1CA100SR	T	105.5/7.4
C917	4510008540	S.ELE EEE1CA100SR	T	105.5/2.6

[LOGIC UNIT]

REF NO.	PARTS NO.	DESCRIPTION	M.	H/V LOCATION
C918	4030011600	S.CER C1608 JB 1E 104K-T	T	138/7.6
C919	4030011600	S.CER C1608 JB 1E 104K-T	T	141.2/7.6
C920	4510008540	S.ELE EEE1CA100SR	T	137.2/4.1
C921	4510008540	S.ELE EEE1CA100SR	T	142/4.1
C922	4030011600	S.CER C1608 JB 1E 104K-T	T	121.6/7.2
C923	4030011600	S.CER C1608 JB 1E 104K-T	T	124.8/7.2
C924	4510008540	S.ELE EEE1CA100SR	T	120.8/3.7
C925	4510008540	S.ELE EEE1CA100SR	T	125.6/3.7
C1002	4030006860	S.CER C1608 JB 1H 102K-T	B	159.3/26.1
C1003	4030006860	S.CER C1608 JB 1H 102K-T	B	156.7/26.1
C1004	4030006860	S.CER C1608 JB 1H 102K-T	B	158/26.1
C1005	4030006860	S.CER C1608 JB 1H 102K-T	B	160.6/26.1
C1006	4030006860	S.CER C1608 JB 1H 102K-T	B	161.9/26.1
C1007	4030006860	S.CER C1608 JB 1H 102K-T	B	155.4/26.1
C1008	4030006860	S.CER C1608 JB 1H 102K-T	B	186.5/34.8
C1009	4030006860	S.CER C1608 JB 1H 102K-T	B	180.5/29.6
C1010	4030006860	S.CER C1608 JB 1H 102K-T	B	179.5/26.1
C1011	4030006860	S.CER C1608 JB 1H 102K-T	B	178.2/30
C1012	4030006860	S.CER C1608 JB 1H 102K-T	B	175.3/26.1
C1013	4030006860	S.CER C1608 JB 1H 102K-T	B	174.4/29.7
C1014	4030006860	S.CER C1608 JB 1H 102K-T	B	173.9/26.1
C1015	4030006860	S.CER C1608 JB 1H 102K-T	B	173.1/29.5
C1016	4030006860	S.CER C1608 JB 1H 102K-T	B	172.5/26.1
C1017	4030006860	S.CER C1608 JB 1H 102K-T	B	171.1/26.1
C1018	4030006860	S.CER C1608 JB 1H 102K-T	B	170.4/29.4
C1019	4030006860	S.CER C1608 JB 1H 102K-T	B	169.7/26.1
C1020	4030006860	S.CER C1608 JB 1H 102K-T	B	169/29.4
C1021	4030006860	S.CER C1608 JB 1H 102K-T	B	168.3/26.1
C1022	4030006860	S.CER C1608 JB 1H 102K-T	B	167.6/29.4
C1023	4030006860	S.CER C1608 JB 1H 102K-T	B	166.9/26.1
C1024	4030006860	S.CER C1608 JB 1H 102K-T	B	166.2/29.4
C1025	4030006860	S.CER C1608 JB 1H 102K-T	B	165.5/26.1
C1026	4030006860	S.CER C1608 JB 1H 102K-T	B	164/30.6
C1027	4030006860	S.CER C1608 JB 1H 102K-T	B	153.6/30.5
C1031	4030006900	S.CER C1608 JB 1H 103K-T	T	191.4/26.2
C1101	4030006860	S.CER C1608 JB 1H 102K-T	B	179.1/11.8
C1102	4030006860	S.CER C1608 JB 1H 102K-T	B	178.4/8.5
C1103	4030006860	S.CER C1608 JB 1H 102K-T	B	177.7/11.8
C1104	4030006860	S.CER C1608 JB 1H 102K-T	B	176.3/11.8
C1105	4030006860	S.CER C1608 JB 1H 102K-T	B	177.2/16.1
C1106	4030006860	S.CER C1608 JB 1H 102K-T	B	176/16.1
C1107	4030006860	S.CER C1608 JB 1H 102K-T	B	174.8/16.1
C1108	4030006860	S.CER C1608 JB 1H 102K-T	B	173.6/16.1
C1109	4030006860	S.CER C1608 JB 1H 102K-T	B	172.4/16.1
C1110	4030006860	S.CER C1608 JB 1H 102K-T	B	171.2/16.1
C1111	4030006860	S.CER C1608 JB 1H 102K-T	B	170/16.1
C1112	4030006860	S.CER C1608 JB 1H 102K-T	B	168.8/15.3
C1113	4030006860	S.CER C1608 JB 1H 102K-T	B	167.6/16.1
C1114	4030006860	S.CER C1608 JB 1H 102K-T	B	166.4/16.1
C1115	4030006860	S.CER C1608 JB 1H 102K-T	B	162.8/16.1
C1116	4030006860	S.CER C1608 JB 1H 102K-T	B	167.1/8.5
C1117	4030006860	S.CER C1608 JB 1H 102K-T	B	166.4/11.8
C1118	4030006860	S.CER C1608 JB 1H 102K-T	B	165.7/8.5
C1119	4030006860	S.CER C1608 JB 1H 102K-T	B	165/11.8
C1120	4030006860	S.CER C1608 JB 1H 102K-T	B	162.9/8.5
C1121	4030006860	S.CER C1608 JB 1H 102K-T	B	162.2/11.8
C1122	4030006860	S.CER C1608 JB 1H 102K-T	B	161.5/8.5
C1123	4030006860	S.CER C1608 JB 1H 102K-T	B	160.1/8.5
C1124	4030006860	S.CER C1608 JB 1H 102K-T	B	159.4/11.8
C1125	4030006860	S.CER C1608 JB 1H 102K-T	B	158.7/8.5
C1126	4030006860	S.CER C1608 JB 1H 102K-T	B	158/11.8
J801	6510021722	S.CON 30FLT-SM2-TB(LF)(SN)(M)	T	99.9/85
J802	6510021722	S.CON 30FLT-SM2-TB(LF)(SN)(M)	T	80/85
J901	6510018921	S.CON B8B-PH-SM4-TB(LF)(SN)	T	150.9/11.5
J1001	6510024151	S.CON 50FY-BMT-TB(LF)(SN)	T	170.2/21.3
J1002	6510022191	S.CON B3B-PH-SM4-TB(LF)(SN)	T	192.5/19.1
J1101	6510024151	S.CON 50FY-BMT-TB(LF)(SN)	T	170.2/3.6
S51	2260002740	S.SWI LS8J2M-T	T	73.1/75.9
W605	7120000470	JUM ERDS2T0		
EP203	6910012350	S.BEA MMZ1608Y 102BT	T	50.8/65.6
EP204	6910012350	S.BEA MMZ1608Y 102BT	T	57.5/89
EP801	6910014730	S.BEA MPZ2012S331A-T	T	82.1/88.8
EP802	6910014690	S.BEA MPZ1608S221A-T	T	80.5/88.4
EP803	6910014730	S.BEA MPZ2012S331A-T	T	81.7/80.7
EP804	6910014730	S.BEA MPZ2012S331A-T	T	79.9/80.7
EP805	6910014690	S.BEA MPZ1608S221A-T	T	78.4/80.8
EP806	6910014730	S.BEA MPZ2012S331A-T	T	76.8/80.8
EP807	6910012350	S.BEA MMZ1608Y 102BT	T	75.3/81.1
EP808	6910012350	S.BEA MMZ1608Y 102BT	T	75.8/88.4
EP809	6910012350	S.BEA MMZ1608Y 102BT	T	74/81.1
EP810	6910012350	S.BEA MMZ1608Y 102BT	T	73.9/88.4
EP811	6910012350	S.BEA MMZ1608Y 102BT	T	72.7/88.4
EP814	6910014730	S.BEA MPZ2012S331A-T	B	64.2/93.8
EP851	6910014730	S.BEA MPZ2012S331A-T	T	166.8/95.1
EP852	6910014730	S.BEA MPZ2012S331A-T	T	194.6/96.7
EP853	6910014730	S.BEA MPZ2012S331A-T	T	165.2/96.9
EP854	6910014730	S.BEA MPZ2012S331A-T	T	192.1/97.8
EP871	6910014730	S.BEA MPZ2012S331A-T	T	192.8/42.6
EP872	6910014730	S.BEA MPZ2012S331A-T	T	163.6/46
EP873	6910014730	S.BEA MPZ2012S331A-T	T	190.2/41.5
EP874	6910014730	S.BEA MPZ2012S331A-T	T	165.4/44.4
EP1001	6910014640	S.BEA MPZ2012S221A-T	B	188/24.7
EP1002	6910014690	S.BEA MPZ1608S221A-T	T	155.4/26.1
EP1003	6910014690	S.BEA MPZ1608S221A-T	T	156.7/26.1
EP1004	6910014690	S.BEA MPZ1608S221A-T	T	158/26.1
EP1005	6910014690	S.BEA MPZ1608S221A-T	T	159.3/26.1

M.=Mounted side (T: Mounted on the Top side, B: Mounted on the Bottom side)
S.=Surface mount

[LOGIC UNIT]

REF NO.	PARTS NO.	DESCRIPTION		M.	H/V LOCATION
EP1006	6910014690	S.BEA	MPZ1608S221A-T	T	160.6/26.1
EP1007	6910014690	S.BEA	MPZ1608S221A-T	T	163.1/26.1
EP1008	6910014690	S.BEA	MPZ1608S221A-T	T	179.1/29.9
EP1009	6910014690	S.BEA	MPZ1608S221A-T	T	185.1/26.1

[MAIN UNIT]

REF NO.	PARTS NO.	DESCRIPTION		M.	H/V LOCATION
IC1201	1110003870	S.IC	NJM2058M-TE1-#ZZZB	B	43.2/129.3
IC1301	1110003870	S.IC	NJM2058M-TE1-#ZZZB	B	18.8/131.1
IC1401	1130011530	S.IC	CD74HC4094M96	B	54.9/96.2
IC1402	1130011530	S.IC	CD74HC4094M96	B	54.9/108.1
IC1403	1130012000	S.IC	M62352AGP C60Q	T	58.6/95
IC1404	1120002830	S.IC	NJM2125F-TE1-#FZZB	T	168.4/132.6
IC2001	1110003870	S.IC	NJM2058M-TE1-#ZZZB	B	174.6/75.2
IC2101	1190002261	S.IC	USB2502-AEZG	T	162.7/34.5
IC2102	1130013010	S.IC	SN74AHC1G08DCK3	T	162.3/40.3
IC2103	1180003480	S.REG	NJU7772F33-TE1-#ZZZB	T	176/33.9
IC2104	1180003480	S.REG	NJU7772F33-TE1-#ZZZB	T	176.4/27.9
IC2121	1190002730	S.IC	CP2102-GMR <MAC>	T	177.2/41.5
IC2131	1130007021	S.IC	TC7S66FU(TE85L,F)	T	174.4/58.6
IC2132	1190002240	S.IC	PCM2901E/2K	T	160.5/53.1
IC2201	1130005252	S.IC	TC74HC08AF(EL,F)	B	182/47.7
IC2202	1130005721	S.IC	TC7W04F(TE12L,F)	B	184.1/39.6
IC2301	1110003870	S.IC	NJM2058M-TE1-#ZZZB	B	97.7/18.9
IC2312	1110003091	IC	LA4425A-E		
IC2331	1110006300	S.IC	NJM2172V-TE1-#ZZZB	T	92.6/10.2
IC2362	1120002830	S.IC	NJM2125F-TE1-#FZZB	T	100.6/19.3
IC2601	1110006300	S.IC	NJM2172V-TE1-#ZZZB	T	11.6/63.4
IC3001	1130012900	S.IC	TC74LCX00FT (EL)	T	144.2/38.8
IC3002	1130013110	S.IC	KIC7W53FK-RTK/P	T	89/22.1
IC3201	1110007390	S.IC	NJM2114M-TE1-#ZZZB	B	124/41.4
IC3202	1110006190	S.IC	NJM074M-TE1-#ZZZB	B	124/51.6
IC3203	1110007390	S.IC	NJM2114M-TE1-#ZZZB	B	124/61.2
IC3301	1110005100	S.IC	NJM072BM-TE1-#ZZZB	B	129.8/30.7
IC3303	1110007390	S.IC	NJM2114M-TE1-#ZZZB	B	121.2/30.7
IC3401	1110007390	S.IC	NJM2114M-TE1-#ZZZB	B	104.1/35.1
IC3402	1110005461	S.IC	TA4107F(TE12L,F)	T	108.3/48.8
IC3501	1130013110	S.IC	KIC7W53FK-RTK/P	T	107.8/59.6
IC3502	1130013110	S.IC	KIC7W53FK-RTK/P	T	109.4/76.3
IC3651	1180003210	S.REG	NJM2831F10	T	167.8/80.1
IC3715	1110006420	S.IC	UPC2708TB-E3-A	T	144/101.5
IC4001	1110007390	S.IC	NJM2114M-TE1-#ZZZB	B	79.3/21.6
IC4002	1110007390	S.IC	NJM2114M-TE1-#ZZZB	B	79.2/12.2
IC4003	1180003490	S.REG	NJM2871BF04-TE1-#ZZZB	T	63.8/9.1
IC4004	1190002920	S.IC	PCM4220PFB	T	65.9/19.5
IC4005	1130013440	S.IC	SN74LVC2G74DCTR	T	58.4/12.9
IC4101	1130005971	S.IC	TC74HC4053AF(F) S	B	90.8/71.4
IC4201	1110007390	S.IC	NJM2114M-TE1-#ZZZB	B	78.3/52.8
IC4202	1110007390	S.IC	NJM2114M-TE1-#ZZZB	B	71.1/44.9
IC4204	1110007390	S.IC	NJM2114M-TE1-#ZZZB	B	80/44.9
IC4205	1110001901	S.IC	UPC4570G2-E1-A	B	79.4/73.4
IC4301	1190002650	S.IC	AK4620BVFP-E2/P	T	67.3/37.7
IC4302	1110004770	S.IC	BU9480F-E2	B	78.1/62.7
IC4401	1110007390	S.IC	NJM2114M-TE1-#ZZZB	B	79.3/31.5
IC4402	1110003870	S.IC	NJM2058M-TE1-#ZZZB	B	91.2/59.9
IC4501	1130015150	S.IC	CY22381FXC(SX-3073G)	B	66.4/89.1
IC4502	1130011930	S.IC	SN74LVC1G04DCKR	T	67.3/86.7
IC5001	1140014800	S.IC	TMS320C6726BRFP266	T	41.5/23.4
IC5002	1130015210	S.IC	EN29LV040A-70SCP(SX-3073C)	T	17.4/23.1
IC5101	1140014320	S.IC	TMS320C6720BRFP200	T	50.8/62.9
IC5102	1130015220	S.IC	EN29LV040A-70SCP(SX-3073D)	T	26.7/62.7
IC6001	1120002830	S.IC	NJM2125F-TE1-#FZZB	T	151.2/113.4
IC6002	1180000720	S.IC	AN79L05M-(E1)	B	110.4/90.9
IC6003	1190002880	S.IC	AD9834CRUZ-REEL7 <FE>	T	80.6/128
IC6004	1190002890	S.IC	ADF4360-8BCPZRL7 <FE>	T	79.7/106
IC6005	1110006131	S.IC	UPC4094G2-E1-A	B	104.6/81
IC6006	1110006131	S.IC	UPC4094G2-E1-A	B	96.1/81
IC6007	1190002900	S.IC	ADS7886SDCKR	T	84/76
IC6008	1130013440	S.IC	SN74LVC2G74DCTR	T	92.3/107.7
IC6009	1110006131	S.IC	UPC4094G2-E1-A	B	88.7/81
IC6010	1130011930	S.IC	SN74LVC1G04DCKR	T	71.5/106.9
IC6020	1130011930	S.IC	SN74LVC1G04DCKR	T	92.3/112.3
Q1101	1540000550	S.TRA	2SD1664 T100Q	B	4.6/92.4
Q1102	1530003900	S.TRA	KTC4075 BL-RTK/P	T	7.9/96.5
Q1103	1540000550	S.TRA	2SD1664 T100Q	B	4.6/99.1
Q1111	1540000550	S.TRA	2SD1664 T100Q	B	4.6/106.7
Q1112	1530003900	S.TRA	KTC4075 BL-RTK/P	T	7.9/104.1
Q1201	1560001260	S.FET	2SK3018 T106	T	42.9/125.7
Q1202	1590003780	S.TRA	KRA304E-RTK/P	T	45.2/126
Q1241	1590003770	S.TRA	KRA302E-RTK/P	T	36.3/123
Q1242	1530003960	S.TRA	KTC2875-B-RTK/P	T	39.1/123
Q1243	1510000510	S.TRA	2SA1576A T106R	B	20.9/120.8
Q1251	1530003960	S.TRA	KTC2875-B-RTK/P	T	43.3/119.7
Q1252	1590003770	S.TRA	KRA302E-RTK/P	T	47.5/119.1
Q1253	1590003790	S.TRA	KRC404E RTK/P	T	59/120.2
Q1254	1560001260	S.FET	2SK3018 T106	T	59.1/110.5
Q1255	1530003900	S.TRA	KTC4075 BL-RTK/P	T	56.1/110.6
Q1256	1590003680	S.TRA	KRC402 RTK/P	T	59.3/126.5
Q1257	1590003680	S.TRA	KRC402 RTK/P	T	59.3/135.6
Q1401	1530003900	S.TRA	KTC4075 BL-RTK/P	T	57.2/101.7
Q2001	1590003680	S.TRA	KRC402 RTK/P	T	166.9/145.3
Q2031	1530003900	S.TRA	KTC4075 BL-RTK/P	T	172.1/148.3
Q2041	1540000451	S.TRA	2SD1623T-TD-E	B	187.3/146
Q2042	1530003900	S.TRA	KTC4075 BL-RTK/P	T	179.8/145.3
Q2043	1590003770	S.TRA	KRA302E-RTK/P	T	184.7/148
Q2051	1530003900	S.TRA	KTC4075 BL-RTK/P	T	162.6/145.3

[MAIN UNIT]

REF NO.	PARTS NO.	DESCRIPTION		M.	H/V LOCATION
Q2101	1590003770	S.TRA	KRA302E-RTK/P	T	159.4/41.8
Q2102	1590003680	S.TRA	KRC402 RTK/P	T	159.6/39.5
Q2201	1590001650	S.TRA	XP4601(TX)	T	189.8/40.3
Q2301	1590003680	S.TRA	KRC402 RTK/P	T	145.7/5.2
Q2302	1590003680	S.TRA	KRC402 RTK/P	T	139.6/5.2
Q2311	1540000471	S.TRA	2SD1801S-TL-E	B	132.5/9.5
Q2312	1560001330	S.FET	RSR025N03	T	109.1/16
Q2361	1550000010	S.FET	2SJ364-Q (TX)	T	101.5/26.6
Q3001	1530002601	S.TRA	2SC4215-O(TE85R,F)	B	145.3/32.9
Q3201	1530003450	S.TRA	2SC4835-R(TX)	T	120.3/74.8
Q3202	1530003450	S.TRA	2SC4835-R(TX)	T	126.8/74.8
Q3501	1580000751	S.FET	3SK294(TE85L,F)	T	108.6/55.6
Q3502	1590003680	S.TRA	KRC402 RTK/P	T	99.9/60.5
Q3504	1560000561	S.FET	2SK882-GR(TE85L,F)	B	114.1/85.7
Q3601	1530003021	S.TRA	2SC4402-3-TL-E	B	152.7/82.8
Q3602	1530003021	S.TRA	2SC4402-3-TL-E	B	159.2/81
Q3603	1530003842	S.TRA	2SC5501A-4-TR-E	T	162.4/86.6
Q6003	1530003900	S.TRA	KTC4075 BL-RTK/P	T	150.3/119
Q6004	1530003240	S.TRA	2SC4536 QS-T1	T	134/110.5
Q6005	1560000561	S.FET	2SK882-GR(TE85L,F)	B	110.5/100.4
Q6006	1530003340	S.TRA	2SC3357-T1 RF	T	96.2/132.1
Q6007	1560000561	S.FET	2SK882-GR(TE85L,F)	T	114.8/104.4
Q6008	1590003680	S.TRA	KRC402 RTK/P	T	85.5/107.4
D1001	1790000660	S.DIO	MA728(TX)	B	27.6/104.3
D1002	1790000660	S.DIO	MA728(TX)	B	30.1/104.3
D1101	1750001180	S.DIO	KDS122 RTK/P	T	7.9/100.3
D1111	1750001180	S.DIO	KDS122 RTK/P	T	7.9/107.9
D1201	1730002341	S.ZEN	MAZ8047GML	T	44.5/128.3
D1202	1750001320	S.DIO	KDS4148U RTK/P	T	47.2/123.3
D1203	1750001320	S.DIO	KDS4148U RTK/P	B	39.2/122.8
D1204	1750001320	S.DIO	KDS4148U RTK/P	B	39.2/135.2
D1205	1750001320	S.DIO	KDS4148U RTK/P	T	36.3/127
D1206	1750001320	S.DIO	KDS4148U RTK/P	T	36.8/130.1
D1251	1790000660	S.DIO	MA728(TX)	B	44.6/122.8
D1252	1750001320	S.DIO	KDS4148U RTK/P	T	57.4/112.8
D1302	1750001320	S.DIO	KDS4148U RTK/P	B	12.2/138.6
D1303	1750001320	S.DIO	KDS4148U RTK/P	B	23.5/136.6
D1304	1750001320	S.DIO	KDS4148U RTK/P	B	27.3/126.7
D1401	1750001320	S.DIO	KDS4148U RTK/P	B	65.2/101.4
D1406	1750001320	S.DIO	KDS4148U RTK/P	B	17/88
D1407	1750001320	S.DIO	KDS4148U RTK/P	B	19/88
D1408	1750001320	S.DIO	KDS4148U RTK/P	B	21/88
D2031	1750001320	S.DIO	KDS4148U RTK/P	T	172.1/145.1
D2041	1750001320	S.DIO	KDS4148U RTK/P	T	183.5/145.1
D2101	1790000980	S.DIO	MA742(TX)	T	169.5/29.6
D2102	1790000980	S.DIO	MA742(TX)	T	172/29.6
D2131	1750001180	S.DIO	KDS122 RTK/P	T	171.8/61.5
D2201	1750001320	S.DIO	KDS4148U RTK/P	T	192.3/37
D2301	1750001320	S.DIO	KDS4148U RTK/P	B	147.2/6.9
D2302	1750001320	S.DIO	KDS4148U RTK/P	B	141.1/6.9
D2361	1750001320	S.DIO	KDS4148U RTK/P	T	101.3/24.5
D3201	1750000431	S.DIO	HSB88WSTR-E	T	145.5/63
D3202	1750000431	S.DIO	HSB88WSTR-E	T	137.7/66.1
D3301	1750001320	S.DIO	KDS4148U RTK/P	B	126.2/33.1
D3302	1750001320	S.DIO	KDS4148U RTK/P	B	126.2/28.3
D3701	1750000581	S.DIO	1SV307(TPH3,F)	B	155.8/93.6
D3702	1750000581	S.DIO	1SV307(TPH3,F)	B	148.5/94.8
D3703	1750000431	S.DIO	HSB88WSTR-E	T	135.1/91
D4001	1750001320	S.DIO	KDS4148U RTK/P	T	78.6/22.5
D4002	1750001320	S.DIO	KDS4148U RTK/P	T	78.6/20.7
D4101	1790001041	S.ZEN	MAZ8033GLL	B	84.1/77.7
D4102	1790001041	S.ZEN	MAZ8033GLL	B	97.8/69.9
D6001	1750000971	S.DIO	CPH5513-TL-E	T	162.4/116.5
D6002	1750000441	S.DIO	1SV263-TL-E	B	161/120.2
D6003	1750000971	S.DIO	CPH5513-TL-E	T	160.5/122.8
D6004	1750000431	S.DIO	HSB88WSTR-E	T	93.4/92.5
D6005	1750000431	S.DIO	HSB88WSTR-E	T	118.6/127.1
FI3501	2020001070	CER	CFWLA455KDFA-B0 (CFWS455D)		
FI3502	2020001510	CER	CFWLA455KJFA-B0 (CFWS455IT)		
FI5001	2040000790	S.LC	EXCCET103U	T	37.6/41.4
FI5101	2040000790	S.LC	EXCCET103U	T	41.1/81
FI6001	2030000290	S.MON	DSF753SBF 45 MHz (FL-357)	T	111.9/111
X2101	6050012780	S.XTA	CR-871 DSX321G 24 MHz	T	160.3/25.2
X2131	6050012770	S.XTA	CR-870 DSX321G 12 MHz	T	164.4/60.8
L1501	6190002000	S.COI	SLF12575T-330M3R2-PF	T	163.1/13.9
L1901	6200003241	S.COI	NLV32T-221J	T	145.2/141.7
L1902	6200003241	S.COI	NLV32T-221J	T	145.2/138.7
L2001	6200002041	S.COI	NLV25T-101J	T	178/138.7
L2002	6200002041	S.COI	NLV25T-101J	T	178/135.6
L2003	6200002041	S.COI	NLV25T-101J	T	178/129.4
L2004	6200002041	S.COI	NLV25T-101J	T	178/132.5
L2005	6200002041	S.COI	NLV25T-101J	T	178/126.3
L2006	6200002041	S.COI	NLV25T-101J	T	178/118
L2007	6200002041	S.COI	NLV25T-101J	T	178/114.9
L2311	6180003640	COI	SZW1012T-142-0.3		
L2331	6200002041	S.COI	NLV25T-101J	B	87.9/10.6
L2501	6200002041	S.COI	NLV25T-101J	B	179.7/94.9
L2601	6200002041	S.COI	NLV25T-101J	T	17.1/68.5
L3001	6200001831	S.COI	NLV32T-100J	B	139.7/37.3
L3002	6200001831	S.COI	NLV32T-100J	B	139.7/40.3
L3003	6200002520	S.COI	ELJNC R18K-F	T	147.7/43.3
L3201	6200003520	S.COI	ELJFB 102K-F	T	125.7/68.9
L3202	6140002810	S.COI	LR-317	T	145.5/69
L3203	6140002810	S.COI	LR-317	T	145.5/57
L3204	6140002810	S.COI	LR-317	T	137.7/60.1
L3205	6140002810	S.COI	LR-317	T	137.7/72.1

M.=Mounted side (T: Mounted on the Top side, B: Mounted on the Bottom side)
S.=Surface mount

[MAIN UNIT]

REF NO.	PARTS NO.	DESCRIPTION	M.	H/V LOCATION
L3401	6200002041	S.COI NLV25T-101J	B	109.3/47.8
L3402	6200002041	S.COI NLV25T-101J	B	112.3/48.1
L3403	6200002041	S.COI NLV25T-101J	B	112.7/43.5
L3501	6200002041	S.COI NLV25T-101J	B	101.9/54.2
L3502	6200003520	S.COI ELJFB 102K-F	B	105.7/55
L3503	6150004090	COI LS-469 (C-13969)		
L3601	6200005011	S.COI NLV25T-100J	B	163.6/79.4
L3602	6190001621	COI #E544EN-100028		
L3603	6140003930	COI LR-492		
L3604	6200007750	S.COI LQW2BHN56NJ03L	B	162.5/93.2
L3605	6200007770	S.COI LQW2BHNR10J03L	B	159.8/94.1
L3701	6140004680	S.COI LR-528 4KBL	T	128.2/91
L3702	6140002810	S.COI LR-317	T	142.1/91
L3703	6200003281	S.COI NLV25T-2R2J	B	159.7/97.9
L3704	6200003281	S.COI NLV25T-2R2J	B	149.6/86.7
L3705	6200003281	S.COI NLV25T-2R2J	B	154.8/96.8
L3715	6200005041	S.COI NLV25T-220J	B	144.5/100.6
L4001	6200001831	S.COI NLV32T-100J	B	60.4/11.9
L4301	6200001831	S.COI NLV32T-100J	T	58.1/43.6
L4302	6200001831	S.COI NLV32T-100J	T	64.1/31.4
L4303	6200001831	S.COI NLV32T-100J	T	72/66.3
L4501	6200001831	S.COI NLV32T-100J	T	73.3/87.3
L5001	6200011900	S.COI LQH43CN100K03L	T	44/41.9
L5101	6200011900	S.COI LQH43CN100K03L	T	35.7/78.9
L6001	6200001831	S.COI NLV32T-100J	T	157.4/118
L6003	6200001831	S.COI NLV32T-100J	B	85.3/134.6
L6004	6200001831	S.COI NLV32T-100J	T	163.9/120.3
L6005	6200001831	S.COI NLV32T-100J	B	76.3/134.2
L6006	6200001831	S.COI NLV32T-100J	B	161.6/123.3
L6008	6200001831	S.COI NLV32T-100J	B	148.7/117.5
L6009	6200005051	S.COI NLV25T-330J	B	98.5/89.9
L6010	6200013650	S.COI LQW18ANR27G00D	T	74.8/104.3
L6011	6200013650	S.COI LQW18ANR27G00D	T	75.6/107.4
L6012	6200001831	S.COI NLV32T-100J	T	155.8/123.4
L6013	6200002041	S.COI NLV25T-101J	B	103.4/75.7
L6014	6200010940	S.COI C2520C-39NG-A	T	155.9/128.3
L6015	6200001831	S.COI NLV32T-100J	B	83/110.3
L6016	6140004680	S.COI LR-528 4KBL	T	87.4/92.5
L6017	6200002041	S.COI NLV25T-101J	B	90.1/87.6
L6018	6200010860	S.COI C2520C-R10G-A (0.1U)	T	152.3/129.1
L6019	6200002911	S.COI NLV25T-R27J	B	87.3/121.6
L6020	6140004680	S.COI LR-528 4KBL	T	99.4/92.5
L6021	6200004961	S.COI NLV25T-R33J	T	88.1/122.4
L6022	6200001831	S.COI NLV32T-100J	B	83/107
L6023	6150004280	COI LS-484B (C-14927)		
L6024	6200002651	S.COI NLV25T-R18J	B	76.5/111.3
L6025	6200002651	S.COI NLV25T-R18J	B	79.3/111.3
L6026	6200010450	S.COI C2520C-R82G-A (0.82U)	T	139.7/118.6
L6027	6200009851	S.COI NLV25T-R39J	B	91.4/120.4
L6028	6150004280	COI LS-484B (C-14927)		
L6029	6200009851	S.COI NLV25T-R39J	B	94.2/125.7
L6030	6200001831	S.COI NLV32T-100J	T	115.1/99.3
L6031	6200002690	S.COI MLF1608A 1R0M-T	B	139.6/113.7
L6032	6150004280	COI LS-484B (C-14927)		
L6033	6140003790	COI LR-442		
L6034	6200001831	S.COI NLV32T-100J	T	128/117
L6035	6200001831	S.COI NLV32T-100J	T	128/111.5
L6036	6200004961	S.COI NLV25T-R33J	T	90.5/133.4
L6037	6150004280	COI LS-484B (C-14927)		
L6038	6200009851	S.COI NLV25T-R39J	B	103.4/131.5
L6039	6140002810	S.COI LR-317	T	124.6/127.1
L6040	6140002810	S.COI LR-317	T	113.1/127.1
L6041	6150004250	COI LS-471A (C-14922)		
L6042	6200011670	S.COI LQW18AN82NG00D	T	110.6/117
L6043	6200002651	S.COI NLV25T-R18J	T	95.2/102
L6044	6200002841	S.COI NLV25T-R22J	T	91.6/101.1
L6045	6200002611	S.COI NLV25T-R47J	B	107/134.4
L6046	6200005140	S.COI MLF1608D R33K-T	B	72.5/118.6
L6047	6200003540	S.COI MLF1608D R22K-T	B	77.3/119.3
R1001	7030003200	S.RES ERJ3GEYJ 100 V (10)	T	25.1/114.7
R1002	7030003200	S.RES ERJ3GEYJ 100 V (10)	T	25.1/113.2
R1003	7030003200	S.RES ERJ3GEYJ 100 V (10)	T	25.1/111.9
R1004	7030003200	S.RES ERJ3GEYJ 100 V (10)	T	25.1/110.6
R1005	7030003200	S.RES ERJ3GEYJ 100 V (10)	T	25.1/109.3
R1006	7030003200	S.RES ERJ3GEYJ 100 V (10)	T	25.1/108
R1007	7030003200	S.RES ERJ3GEYJ 100 V (10)	T	25.1/106.7
R1008	7030003200	S.RES ERJ3GEYJ 100 V (10)	T	25.1/105.4
R1009	7030003200	S.RES ERJ3GEYJ 100 V (10)	T	13.8/109.4
R1010	7030003200	S.RES ERJ3GEYJ 100 V (10)	T	13.8/108.1
R1011	7030003200	S.RES ERJ3GEYJ 100 V (10)	T	13.8/106.8
R1012	7030003200	S.RES ERJ3GEYJ 100 V (10)	T	13.8/105.5
R1013	7030003200	S.RES ERJ3GEYJ 100 V (10)	T	13.8/104.2
R1014	7030003200	S.RES ERJ3GEYJ 100 V (10)	T	13.8/102.9
R1015	7030003200	S.RES ERJ3GEYJ 100 V (10)	T	13.8/101.6
R1016	7030003200	S.RES ERJ3GEYJ 100 V (10)	T	13.8/100.3
R1017	7030003200	S.RES ERJ3GEYJ 100 V (10)	T	13.8/99
R1018	7030003200	S.RES ERJ3GEYJ 100 V (10)	T	25.1/100.2
R1019	7030003200	S.RES ERJ3GEYJ 100 V (10)	T	25.1/98.9
R1020	7030003200	S.RES ERJ3GEYJ 100 V (10)	T	13.8/97.7
R1021	7030003200	S.RES ERJ3GEYJ 100 V (10)	T	25.1/97.6
R1022	7030003860	S.RES ERJ3GE JPW V	T	13.8/96.4
R1023	7030003200	S.RES ERJ3GEYJ 100 V (10)	T	13.8/95.1
R1024	7030003200	S.RES ERJ3GEYJ 100 V (10)	T	13.8/93.8
R1025	7030003200	S.RES ERJ3GEYJ 100 V (10)	T	25.1/96.3
R1026	7030003200	S.RES ERJ3GEYJ 100 V (10)	T	25.1/95
R1027	7030003200	S.RES ERJ3GEYJ 100 V (10)	T	25.1/93.7
R1028	7030003200	S.RES ERJ3GEYJ 100 V (10)	T	25.1/92.4
R1029	7030003200	S.RES ERJ3GEYJ 100 V (10)	T	25.1/91.1
R1030	7030003600	S.RES ERJ3GEYJ 223 V (22K)	T	25.1/104.1
R1031	7030003440	S.RES ERJ3GEYJ 102 V (1K)	T	25.1/89.8
R1051	7030003200	S.RES ERJ3GEYJ 100 V (10)	T	47.1/116.5
R1052	7030003200	S.RES ERJ3GEYJ 100 V (10)	T	47.1/115.2

[MAIN UNIT]

REF NO.	PARTS NO.	DESCRIPTION	M.	H/V LOCATION
R1053	7030003200	S.RES ERJ3GEYJ 100 V (10)	T	47.1/113.9
R1054	7030003200	S.RES ERJ3GEYJ 100 V (10)	T	34.2/117.8
R1055	7030003200	S.RES ERJ3GEYJ 100 V (10)	T	34.2/116.5
R1056	7030003200	S.RES ERJ3GEYJ 100 V (10)	T	34.2/115.2
R1057	7030003200	S.RES ERJ3GEYJ 100 V (10)	T	34.2/113.9
R1058	7030003200	S.RES ERJ3GEYJ 100 V (10)	T	47.1/112.6
R1059	7030003200	S.RES ERJ3GEYJ 100 V (10)	T	34.2/112.6
R1060	7030003200	S.RES ERJ3GEYJ 100 V (10)	T	34.2/111.3
R1061	7030003200	S.RES ERJ3GEYJ 100 V (10)	T	34.2/110
R1062	7030003200	S.RES ERJ3GEYJ 100 V (10)	T	47.1/111.3
R1063	7030003200	S.RES ERJ3GEYJ 100 V (10)	T	47.1/110
R1064	7030003200	S.RES ERJ3GEYJ 100 V (10)	T	34.2/108.7
R1065	7030003200	S.RES ERJ3GEYJ 100 V (10)	T	34.2/107.4
R1066	7030003200	S.RES ERJ3GEYJ 100 V (10)	T	34.2/106.1
R1067	7030003200	S.RES ERJ3GEYJ 100 V (10)	T	34.2/104.8
R1068	7030003200	S.RES ERJ3GEYJ 100 V (10)	T	34.2/103.5
R1069	7030003200	S.RES ERJ3GEYJ 100 V (10)	T	47.1/108.7
R1070	7030003200	S.RES ERJ3GEYJ 100 V (10)	T	47.1/107.4
R1071	7030003200	S.RES ERJ3GEYJ 100 V (10)	T	33.4/102.2
R1072	7030003200	S.RES ERJ3GEYJ 100 V (10)	T	33.4/100.9
R1073	7030003200	S.RES ERJ3GEYJ 100 V (10)	T	33.4/99.6
R1074	7030003200	S.RES ERJ3GEYJ 100 V (10)	T	33.4/98.3
R1075	7030003200	S.RES ERJ3GEYJ 100 V (10)	T	33.1/97
R1076	7030003200	S.RES ERJ3GEYJ 100 V (10)	T	33.5/95.7
R1077	7030003200	S.RES ERJ3GEYJ 100 V (10)	T	33.5/94.4
R1078	7030003200	S.RES ERJ3GEYJ 100 V (10)	T	34.2/93.1
R1079	7030003200	S.RES ERJ3GEYJ 100 V (10)	T	34.2/91.8
R1080	7030003200	S.RES ERJ3GEYJ 100 V (10)	T	34.2/90.5
R1081	7030003200	S.RES ERJ3GEYJ 100 V (10)	T	47.1/106.1
R1082	7030003200	S.RES ERJ3GEYJ 100 V (10)	T	47.1/104.8
R1083	7030003200	S.RES ERJ3GEYJ 100 V (10)	T	47.1/103.5
R1084	7030003200	S.RES ERJ3GEYJ 100 V (10)	T	47.1/102.2
R1085	7030003200	S.RES ERJ3GEYJ 100 V (10)	T	47.1/100.9
R1086	7030003200	S.RES ERJ3GEYJ 100 V (10)	T	34.2/89.2
R1087	7030003200	S.RES ERJ3GEYJ 100 V (10)	T	47.1/99.6
R1088	7030003200	S.RES ERJ3GEYJ 100 V (10)	T	34.2/87.9
R1089	7030003200	S.RES ERJ3GEYJ 100 V (10)	T	34.2/86.6
R1090	7030003200	S.RES ERJ3GEYJ 100 V (10)	T	34.2/85.3
R1091	7030003200	S.RES ERJ3GEYJ 100 V (10)	T	47.1/98.3
R1092	7030003200	S.RES ERJ3GEYJ 100 V (10)	T	47.1/97
R1093	7030003200	S.RES ERJ3GEYJ 100 V (10)	T	47.1/95.7
R1094	7030003200	S.RES ERJ3GEYJ 100 V (10)	T	47.1/94.4
R1095	7030003200	S.RES ERJ3GEYJ 100 V (10)	T	47.1/93.1
R1096	7030003200	S.RES ERJ3GEYJ 100 V (10)	T	47.1/91.8
R1097	7030003200	S.RES ERJ3GEYJ 100 V (10)	T	47.1/90.5
R1098	7030003200	S.RES ERJ3GEYJ 100 V (10)	T	47.1/89.2
R1101	7030003560	S.RES ERJ3GEYJ 103 V (10K)	T	8/93.2
R1102	7030003560	S.RES ERJ3GEYJ 103 V (10K)	T	5.3/93.2
R1103	7030003560	S.RES ERJ3GEYJ 103 V (10K)	T	8/94.5
R1104	7030006210	S.RES ERJ12YJ4R7U (4.7)	T	3.3/98.7
R1105	7030003440	S.RES ERJ3GEYJ 102 V (1K)	T	2/96.1
R1106	7030003240	S.RES ERJ3GEYJ 220 V (22)	B	8.9/96.5
R1107	7030003240	S.RES ERJ3GEYJ 220 V (22)	B	8.9/95.2
R1111	7030003560	S.RES ERJ3GEYJ 103 V (10K)	T	8/102.2
R1112	7030006210	S.RES ERJ12YJ4R7U (4.7)	T	3.3/106.3
R1113	7030003440	S.RES ERJ3GEYJ 102 V (1K)	T	2/103.7
R1201	7030003640	S.RES ERJ3GEYJ 473 V (47K)	T	47.4/121.7
R1202	7030003840	S.RES ERJ3GEYJ 225 V (2.2M)	B	50.1/122.6
R1203	7030011360	S.RES ERJ8GEYJ 241V (240)	T	49.3/128
R1205	7030003320	S.RES ERJ3GEYJ 101 V (100)	T	39.9/129.3
R1206	7030003640	S.RES ERJ3GEYJ 473 V (47K)	B	38.1/129.7
R1207	7030003320	S.RES ERJ3GEYJ 101 V (100)	B	36.1/123.9
R1208	7030003620	S.RES ERJ3GEYJ 333 V (33K)	T	46.5/137.7
R1209	7030003680	S.RES ERJ3GEYJ 104 V (100K)	T	43.7/137.7
R1210	7030003520	S.RES ERJ3GEYJ 472 V (4.7K)	T	47.3/134.6
R1211	7310005390	S.TRI EVM-3VSX50 BQ3 (472)	T	44.2/134.9
R1212	7030003450	S.RES ERJ3GEYJ 122 V (1.2K)	B	43/135.7
R1213	7030003520	S.RES ERJ3GEYJ 472 V (4.7K)	B	35.6/130.9
R1214	7030003560	S.RES ERJ3GEYJ 103 V (10K)	T	47.5/124.8
R1215	7030003720	S.RES ERJ3GEYJ 224 V (220K)	B	37.4/125.4
R1216	7030003480	S.RES ERJ3GEYJ 222 V (2.2K)	B	35.6/127.7
R1217	7030003560	S.RES ERJ3GEYJ 103 V (10K)	T	39.3/126.7
R1218	7030003660	S.RES ERJ3GEYJ 683 V (68K)	T	39.3/128
R1219	7030003680	S.RES ERJ3GEYJ 104 V (100K)	T	36.6/125.5
R1220	7030003720	S.RES ERJ3GEYJ 224 V (220K)	B	38.1/132.9
R1221	7030003380	S.RES ERJ3GEYJ 331 V (330)	B	36.8/134.4
R1222	7030003740	S.RES ERJ3GEYJ 334 V (330K)	B	49.9/133.1
R1223	7510001511	S.THE NTCG16 4LH 223JT	T	36.2/128.6
R1224	7030005681	S.RES ERA3YKD 473V (47K)	B	53/133.9
R1225	7030008121	S.RES ERA3YED 682V (6.8K)	B	50.7/134.6
R1226	7030009861	S.RES ERA3YED 471V (470)	T	47.3/130.9
R1227	7310005370	S.TRI EVM-3VSX50 BQ2 (471)	T	44.2/131.2
R1228	7030008121	S.RES ERA3YED 682V (6.8K)	B	50.7/131.4
R1229	7030005681	S.RES ERA3YKD 473V (47K)	B	50.7/129.8
R1241	7030003560	S.RES ERJ3GEYJ 103 V (10K)	T	37.4/121
R1242	7030003720	S.RES ERJ3GEYJ 224 V (220K)	T	39.3/125.4
R1243	7030003440	S.RES ERJ3GEYJ 102 V (1K)	B	21.9/124.3
R1244	7030003680	S.RES ERJ3GEYJ 104 V (100K)	B	24/125.1
R1245	7030003440	S.RES ERJ3GEYJ 102 V (1K)	B	18.7/121.5
R1251	7030003310	S.RES ERJ3GEYJ 820 V (82)	B	41.1/118.7
R1252	7030003320	S.RES ERJ3GEYJ 101 V (100)	B	47/121.6
R1253	7030003380	S.RES ERJ3GEYJ 331 V (330)	B	48.3/123.1
R1254	7030009920	S.RES ERJ3GEYJ 335 V (3.3M)	B	50.7/125.9
R1255	7310005420	S.TRI EVM-3VSX50 B15 (104)	T	55.4/121.2
R1256	7030003680	S.RES ERJ3GEYJ 104 V (100K)	T	52.9/113.1
R1257	7030003560	S.RES ERJ3GEYJ 103 V (10K)	T	52.9/111.3
R1258	7030003640	S.RES ERJ3GEYJ 473 V (47K)	T	57.7/114.3
R1259	7030003760	S.RES ERJ3GEYJ 474 V (470K)	B	53/125.9
R1260	7030003720	S.RES ERJ3GEYJ 224 V (220K)	T	53.6/130
R1262	7310005430	S.TRI EVM-3VSX50 BE5 (224)	T	55.4/127.5
R1263	7030003680	S.RES ERJ3GEYJ 104 V (100K)	B	54.8/125.9
R1264	7030003620	S.RES ERJ3GEYJ 333 V (33K)	T	56.3/130
R1267	7310005430	S.TRI EVM-3VSX50 BE5 (224)	T	55.4/136.4
R1268	7030003600	S.RES ERJ3GEYJ 223 V (22K)	T	56.3/131.3

M.=Mounted side (T: Mounted on the Top side, B: Mounted on the Bottom side)
S.=Surface mount

[MAIN UNIT]

REF NO.	PARTS NO.	DESCRIPTION	M.	H/V LOCATION
R1272	7030003560	S.RES ERJ3GEYJ 103 V (10K)	T	45.7/119.9
R1301	7030003320	S.RES ERJ3GEYJ 101 V (100)	B	18/124.3
R1302	7030003320	S.RES ERJ3GEYJ 101 V (100)	B	19.1/137.8
R1303	7030003360	S.RES ERJ3GEYJ 221 V (220)	B	8.8/139.1
R1304	7030003560	S.RES ERJ3GEYJ 103 V (10K)	B	9/136.3
R1305	7030003360	S.RES ERJ3GEYJ 221 V (220)	B	26.6/136.6
R1306	7030003640	S.RES ERJ3GEYJ 473 V (47K)	B	27.5/134.2
R1307	7030003730	S.RES ERJ3GEYJ 274 V (270K)	B	12.5/136
R1308	7030003860	S.RES ERJ3GE JPW V	B	25.1/135
R1309	7030009920	S.RES ERJ3GEYJ 335 V (3.3M)	B	24.9/127.4
R1310	7030003820	S.RES ERJ3GEYJ 155 V (1.5M)	B	8.5/132
R1311	7030003680	S.RES ERJ3GEYJ 104 V (100K)	B	10.1/133.8
R1312	7030003200	S.RES ERJ3GEYJ 100 V (10)	B	12.9/132
R1313	7030003680	S.RES ERJ3GEYJ 104 V (100K)	B	24.3/133.7
R1314	7030003200	S.RES ERJ3GEYJ 100 V (10)	B	24.3/131.1
R1315	7030003740	S.RES ERJ3GEYJ 334 V (330K)	B	7.8/129.6
R1317	7030003820	S.RES ERJ3GEYJ 155 V (1.5M)	B	19.9/124.4
R1318	7030003840	S.RES ERJ3GEYJ 225 V (2.2M)	B	25.1/129.8
R1319	7030003860	S.RES ERJ3GE JPW V	B	12.6/128.2
R1401	7030003680	S.RES ERJ3GEYJ 104 V (100K)	T	165.7/130.2
R1402	7030003680	S.RES ERJ3GEYJ 104 V (100K)	T	168.5/130.2
R1403	7030003400	S.RES ERJ3GEYJ 471 V (470)	T	171.3/130.2
R1404	7030003320	S.RES ERJ3GEYJ 101 V (100)	T	170.9/135.7
R1405	7030007230	S.RES ERA3YED 102V (1K)	T	61.9/102.7
R1406	7030008061	S.RES ERA3YED 222V (2.2K)	B	61.5/101.4
R1407	7030003640	S.RES ERJ3GEYJ 473 V (47K)	T	11.6/91.6
R1408	7030003640	S.RES ERJ3GEYJ 473 V (47K)	T	13/91.6
R1701	7030003200	S.RES ERJ3GEYJ 100 V (10)	T	137.8/139.9
R1702	7030003200	S.RES ERJ3GEYJ 100 V (10)	T	136.5/139.9
R1703	7030003200	S.RES ERJ3GEYJ 100 V (10)	T	135.2/139.9
R1705	7030003200	S.RES ERJ3GEYJ 100 V (10)	T	132.6/139.9
R1706	7030003200	S.RES ERJ3GEYJ 100 V (10)	T	131.3/139.9
R1801	7030003200	S.RES ERJ3GEYJ 100 V (10)	T	50.6/142.5
R1802	7030003200	S.RES ERJ3GEYJ 100 V (10)	T	51.9/142.5
R1803	7030003200	S.RES ERJ3GEYJ 100 V (10)	T	53.2/142.5
R1804	7030003200	S.RES ERJ3GEYJ 100 V (10)	T	54.5/142.5
R1805	7030003200	S.RES ERJ3GEYJ 100 V (10)	T	55.8/142.5
R1806	7030003200	S.RES ERJ3GEYJ 100 V (10)	T	57.1/142.5
R1807	7030003200	S.RES ERJ3GEYJ 100 V (10)	T	58.4/142.5
R1808	7030003200	S.RES ERJ3GEYJ 100 V (10)	T	59.7/142.5
R1809	7030003200	S.RES ERJ3GEYJ 100 V (10)	T	61/142.5
R1810	7030003200	S.RES ERJ3GEYJ 100 V (10)	T	62.3/142.5
R2001	7030003550	S.RES ERJ3GEYJ 822 V (8.2K)	T	168.8/145.4
R2002	7030003570	S.RES ERJ3GEYJ 123 V (12K)	B	173.1/81.7
R2003	7030003440	S.RES ERJ3GEYJ 102 V (1K)	B	171.3/81.6
R2004	7030003520	S.RES ERJ3GEYJ 472 V (4.7K)	B	168.3/73.8
R2005	7030003320	S.RES ERJ3GEYJ 101 V (100)	T	177.7/75.9
R2006	7030003320	S.RES ERJ3GEYJ 101 V (100)	B	174.4/69.6
R2007	7030003860	S.RES ERJ3GE JPW V	B	177.4/81.7
R2008	7030003560	S.RES ERJ3GEYJ 103 V (10K)	B	181.5/81.7
R2031	7030003520	S.RES ERJ3GEYJ 472 V (4.7K)	T	175.3/145.4
R2032	7030003620	S.RES ERJ3GEYJ 333 V (33K)	T	174/145.4
R2033	7030003520	S.RES ERJ3GEYJ 472 V (4.7K)	T	170.2/145.4
R2034	7030003580	S.RES ERJ3GEYJ 153 V (15K)	T	174/148.1
R2041	7030003520	S.RES ERJ3GEYJ 472 V (4.7K)	T	183.1/148.1
R2042	7030003620	S.RES ERJ3GEYJ 333 V (33K)	T	181.8/148.1
R2043	7030003580	S.RES ERJ3GEYJ 153 V (15K)	T	180.3/148.1
R2044	7030003520	S.RES ERJ3GEYJ 472 V (4.7K)	T	176.6/145.4
R2045	7030003560	S.RES ERJ3GEYJ 103 V (10K)	T	189.5/148.1
R2046	7030003340	S.RES ERJ3GEYJ 151 V (150)	T	186.9/148.1
R2051	7030003560	S.RES ERJ3GEYJ 103 V (10K)	T	164.5/145.4
R2052	7030003520	S.RES ERJ3GEYJ 472 V (4.7K)	T	164.5/148.1
R2053	7030003640	S.RES ERJ3GEYJ 473 V (47K)	T	160.7/145.4
R2062	7030003560	S.RES ERJ3GEYJ 103 V (10K)	T	176.6/73.4
R2063	7030003320	S.RES ERJ3GEYJ 101 V (100)	T	177.9/73.4
R2101	7030003800	S.RES ERJ3GEYJ 105 V (1M)	T	160.8/27.3
R2102	7030003250	S.RES ERJ3GEYJ 270 V (27)	T	168.8/32
R2103	7030003250	S.RES ERJ3GEYJ 270 V (27)	T	168.8/33.3
R2104	7030003240	S.RES ERJ3GEYJ 220 V (22)	B	168.1/36.5
R2105	7030003400	S.RES ERJ3GEYJ 471 V (470)	T	157/34.1
R2106	7030003560	S.RES ERJ3GEYJ 103 V (10K)	T	157.1/35.8
R2107	7030003680	S.RES ERJ3GEYJ 104 V (100K)	T	155.3/37.4
R2108	7030005691	S.RES ERA3YED 123V (12K)	B	166.1/29.7
R2109	7030003240	S.RES ERJ3GEYJ 220 V (22)	B	168.8/34
R2110	7030003560	S.RES ERJ3GEYJ 103 V (10K)	T	157.1/37.1
R2111	7030003460	S.RES ERJ3GEYJ 152 V (1.5K)	T	168.9/38.1
R2112	7030003640	S.RES ERJ3GEYJ 473 V (47K)	T	177.9/30.3
R2113	7030003680	S.RES ERJ3GEYJ 104 V (100K)	T	166.8/40.1
R2114	7030003680	S.RES ERJ3GEYJ 104 V (100K)	T	165.5/40.1
R2115	7030003560	S.RES ERJ3GEYJ 103 V (10K)	B	170.5/67
R2116	7030003560	S.RES ERJ3GEYJ 103 V (10K)	B	170.5/69.6
R2117	7030003860	S.RES ERJ3GE JPW V	B	177.5/69.6
R2118	7030003610	S.RES ERJ3GEYJ 273 V (27K)	B	182.4/72.8
R2121	7030003520	S.RES ERJ3GEYJ 472 V (4.7K)	T	176.5/36.8
R2131	7030003440	S.RES ERJ3GEYJ 102 V (1K)	B	174.1/61.3
R2132	7030003560	S.RES ERJ3GEYJ 103 V (10K)	B	171.9/61.3
R2133	7030003560	S.RES ERJ3GEYJ 103 V (10K)	T	171.2/58.8
R2135	7030003320	S.RES ERJ3GEYJ 101 V (100)	B	179.4/69.6
R2137	7030003800	S.RES ERJ3GEYJ 105 V (1M)	T	160.7/47.8
R2138	7030003800	S.RES ERJ3GEYJ 105 V (1M)	T	163.6/58.6
R2139	7030003560	S.RES ERJ3GEYJ 103 V (10K)	T	175.9/55.4
R2140	7030003680	S.RES ERJ3GEYJ 104 V (100K)	T	174.6/55.4
R2141	7030003680	S.RES ERJ3GEYJ 104 V (100K)	T	173.3/55.4
R2202	7030003590	S.RES ERJ3GEYJ 183 V (18K)	B	189.4/37.8
R2203	7030003560	S.RES ERJ3GEYJ 103 V (10K)	T	189.3/38.3
R2205	7030003640	S.RES ERJ3GEYJ 473 V (47K)	T	187.9/41.9
R2206	7030003570	S.RES ERJ3GEYJ 123 V (12K)	T	189.8/43.9
R2207	7030003560	S.RES ERJ3GEYJ 103 V (10K)	B	180.5/54.2
R2208	7030003560	S.RES ERJ3GEYJ 103 V (10K)	B	182.9/35.4
R2209	7030003680	S.RES ERJ3GEYJ 104 V (100K)	B	185.1/35.4
R2301	7030003360	S.RES ERJ3GEYJ 221 V (220)	B	149/5.3
R2302	7030003360	S.RES ERJ3GEYJ 221 V (220)	B	142.9/5.3
R2303	7030003360	S.RES ERJ3GEYJ 221 V (220)	B	7.9/70
R2304	7030003420	S.RES ERJ3GEYJ 681 V (680)	B	12.7/69.2

[MAIN UNIT]

REF NO.	PARTS NO.	DESCRIPTION	M.	H/V LOCATION
R2305	7030003560	S.RES ERJ3GEYJ 103 V (10K)	B	94.4/5.7
R2308	7030003560	S.RES ERJ3GEYJ 103 V (10K)	T	96/9.9
R2311	7030003440	S.RES ERJ3GEYJ 102 V (1K)	B	136.4/19.5
R2312	7030004040	S.RES ERJ3GEYJ 4R7 V (4.7)	B	108.1/4.7
R2313	7030003600	S.RES ERJ3GEYJ 223 V (22K)	B	135.7/17.4
R2314	7030003560	S.RES ERJ3GEYJ 103 V (10K)	B	99.8/6.8
R2315	7030003660	S.RES ERJ3GEYJ 683 V (68K)	T	99.1/11.3
R2318	7030003280	S.RES ERJ3GEYJ 470 V (47)	B	131/15.2
R2319	7030003440	S.RES ERJ3GEYJ 102 V (1K)	T	109.4/12.1
R2320	7030003520	S.RES ERJ3GEYJ 472 V (4.7K)	B	114.1/17.5
R2321	7030003720	S.RES ERJ3GEYJ 224 V (220K)	B	100.9/12.3
R2323	7030003680	S.RES ERJ3GEYJ 104 V (100K)	T	109.4/13.5
R2324	7030003540	S.RES ERJ3GEYJ 682 V (6.8K)	B	105.6/10
R2325	7030003560	S.RES ERJ3GEYJ 103 V (10K)	T	110.1/20.3
R2326	7030003320	S.RES ERJ3GEYJ 101 V (100)	T	96/20.4
R2327	7030003320	S.RES ERJ3GEYJ 101 V (100)	T	98.2/15.7
R2333	7030003470	S.RES ERJ3GEYJ 182 V (1.8K)	T	64.1/96.9
R2334	7030003470	S.RES ERJ3GEYJ 182 V (1.8K)	T	64.1/98.1
R2335	7030003480	S.RES ERJ3GEYJ 222 V (2.2K)	T	87.6/10
R2336	7030003560	S.RES ERJ3GEYJ 103 V (10K)	T	96/12.9
R2351	7030003860	S.RES ERJ3GE JPW V	B	93.6/24.7
R2352	7030003570	S.RES ERJ3GEYJ 123 V (12K)	B	90.5/20.5
R2353	7030003560	S.RES ERJ3GEYJ 103 V (10K)	B	95.2/24.7
R2354	7030003560	S.RES ERJ3GEYJ 103 V (10K)	B	96.8/25.5
R2361	7030003500	S.RES ERJ3GEYJ 332 V (3.3K)	B	103.6/18.4
R2362	7030003440	S.RES ERJ3GEYJ 102 V (1K)	B	103.6/21.2
R2363	7030003560	S.RES ERJ3GEYJ 103 V (10K)	B	100.8/24
R2364	7030003460	S.RES ERJ3GEYJ 152 V (1.5K)	B	100.8/27.5
R2365	7030003560	S.RES ERJ3GEYJ 103 V (10K)	B	98.4/24.7
R2366	7030003480	S.RES ERJ3GEYJ 222 V (2.2K)	T	100.8/28.5
R2367	7030003560	S.RES ERJ3GEYJ 103 V (10K)	B	98.4/27.5
R2369	7030003440	S.RES ERJ3GEYJ 102 V (1K)	T	100.8/29.8
R2370	7030003600	S.RES ERJ3GEYJ 223 V (22K)	T	103.7/25.7
R2371	7030003700	S.RES ERJ3GEYJ 154 V (150K)	T	101/22.9
R2372	7030003460	S.RES ERJ3GEYJ 152 V (1.5K)	T	101/21.6
R2373	7030003320	S.RES ERJ3GEYJ 101 V (100)	T	99.5/15.7
R2374	7030003460	S.RES ERJ3GEYJ 152 V (1.5K)	T	103.8/18.3
R2375	7030003560	S.RES ERJ3GEYJ 103 V (10K)	T	103.8/21.6
R2401	7030003860	S.RES ERJ3GE JPW V	B	195.6/81.9
R2601	7030003520	S.RES ERJ3GEYJ 472 V (4.7K)	T	4.7/60.2
R2602	7030003560	S.RES ERJ3GEYJ 103 V (10K)	T	17.9/60
R2603	7030003550	S.RES ERJ3GEYJ 822 V (8.2K)	T	17.9/61.3
R2604	7030003560	S.RES ERJ3GEYJ 103 V (10K)	T	17.3/66.6
R2605	7030003550	S.RES ERJ3GEYJ 822 V (8.2K)	T	17.9/65.4
R2607	7030003560	S.RES ERJ3GEYJ 103 V (10K)	T	6.5/59.4
R2608	7030003720	S.RES ERJ3GEYJ 224 V (220K)	T	6/62
R2609	7030003560	S.RES ERJ3GEYJ 103 V (10K)	T	6.5/56.8
R3001	7030003380	S.RES ERJ3GEYJ 331 V (330)	B	145.1/26.9
R3002	7030003220	S.RES ERJ3GEYJ 150 V (15)	B	143.1/27.4
R3003	7030003380	S.RES ERJ3GEYJ 331 V (330)	B	145.1/29.5
R3004	7030003400	S.RES ERJ3GEYJ 471 V (470)	B	143.1/35.8
R3005	7030003630	S.RES ERJ3GEYJ 393 V (39K)	B	143.1/33
R3006	7030003680	S.RES ERJ3GEYJ 104 V (100K)	T	144.8/34
R3007	7030003280	S.RES ERJ3GEYJ 470 V (47)	B	144.7/35.8
R3008	7030003320	S.RES ERJ3GEYJ 101 V (100)	T	147.7/37.6
R3009	7030003320	S.RES ERJ3GEYJ 101 V (100)	T	147.7/40.2
R3010	7030003360	S.RES ERJ3GEYJ 221 V (220)	B	146.1/43.4
R3011	7030003360	S.RES ERJ3GEYJ 221 V (220)	B	144.2/44.2
R3013	7030003860	S.RES ERJ3GE JPW V	B	86.5/27.6
R3015	7030003560	S.RES ERJ3GEYJ 103 V (10K)	T	92.2/24
R3016	7030003860	S.RES ERJ3GE JPW V	T	92.2/25.3
R3201	7030010390	S.RES ERA3YED 821V (820)	B	116.5/39.6
R3202	7030009691	S.RES ERA3YED 101V (100)	B	114.4/37.7
R3203	7030008061	S.RES ERA3YED 222V (2.2K)	B	118.3/42.7
R3204	7030005321	S.RES ERA3YED 103V (10K)	B	129.1/48.3
R3205	7030005321	S.RES ERA3YED 103V (10K)	B	123.8/45.7
R3206	7030005321	S.RES ERA3YED 103V (10K)	B	126.6/57.5
R3207	7030005321	S.RES ERA3YED 103V (10K)	B	123.8/57.5
R3208	7030003320	S.RES ERJ3GEYJ 101 V (100)	T	122.6/48.5
R3209	7030005321	S.RES ERA3YED 103V (10K)	B	121/45.7
R3210	7030005321	S.RES ERA3YED 103V (10K)	B	118.2/50.7
R3211	7030005321	S.RES ERA3YED 103V (10K)	B	117.4/45.9
R3212	7030009861	S.RES ERA3YED 471V (470)	B	115.9/59.3
R3213	7030005321	S.RES ERA3YED 103V (10K)	B	121/57.5
R3214	7030005321	S.RES ERA3YED 103V (10K)	B	117.4/52.3
R3215	7030005321	S.RES ERA3YED 103V (10K)	B	118.2/57.1
R3216	7310004780	S.TRI EVM-3YSX50 B13 (102)	T	129.7/55.8
R3217	7030003320	S.RES ERJ3GEYJ 101 V (100)	T	125.9/40.5
R3218	7030003320	S.RES ERJ3GEYJ 101 V (100)	T	122.6/65.3
R3219	7030003320	S.RES ERJ3GEYJ 101 V (100)	T	125.9/65.3
R3220	7030010560	S.RES ERA3YED 302V (3K)	B	115.9/60.9
R3221	7030007230	S.RES ERA3YED 102V (1K)	B	115.9/62.5
R3222	7030007230	S.RES ERA3YED 102V (1K)	B	118.5/64.6
R3223	7030007230	S.RES ERA3YED 102V (1K)	B	118.5/66.2
R3224	7030007230	S.RES ERA3YED 102V (1K)	B	123.8/68.6
R3225	7030003510	S.RES ERJ3GEYJ 392 V (3.9K)	B	121.9/78.8
R3226	7030010560	S.RES ERA3YED 302V (3K)	B	129.9/63.6
R3227	7030007230	S.RES ERA3YED 102V (1K)	B	129.9/62
R3228	7030007230	S.RES ERA3YED 102V (1K)	B	124.4/64.6
R3229	7030007230	S.RES ERA3YED 102V (1K)	B	121.3/66.2
R3230	7030007230	S.RES ERA3YED 102V (1K)	B	126.9/68.6
R3231	7030003460	S.RES ERJ3GEYJ 152 V (1.5K)	T	127.5/77.7
R3232	7030011050	S.RES ERA3YHD 100V (10)	T	118.4/74.7
R3233	7030009851	S.RES ERA3YED 271V (270)	T	119.7/77.7
R3234	7030009841	S.RES ERA3YHD 330V (33)	B	128.3/76
R3235	7030010980	S.RES ERA3YHD 470V (47)	B	145.5/65.7
R3236	7030011050	S.RES ERA3YHD 100V (10)	T	124.9/74.7
R3237	7030009851	S.RES ERA3YED 271V (270)	T	126.2/77.7
R3238	7030009841	S.RES ERA3YHD 330V (33)	B	132.9/72.8
R3239	7030010980	S.RES ERA3YHD 470V (47)	B	137.7/68.9
R3240	7030003320	S.RES ERJ3GEYJ 101 V (100)	T	122.6/49.8
R3241	7030003320	S.RES ERJ3GEYJ 101 V (100)	T	125.9/46.3
R3301	7030003440	S.RES ERJ3GEYJ 102 V (1K)	B	127.8/36.6
R3302	7030003370	S.RES ERJ3GEYJ 271 V (270)	B	129.4/37.8

M.=Mounted side (T: Mounted on the Top side, B: Mounted on the Bottom side)
S.=Surface mount

[MAIN UNIT]

REF NO.	PARTS NO.	DESCRIPTION	M.	H/V LOCATION
R3303	7030003800	S.RES ERJ3GEYJ 105 V (1M)	B	132.7/39.3
R3304	7030003360	S.RES ERJ3GEYJ 221 V (220)	B	125.4/35.8
R3305	7030003360	S.RES ERJ3GEYJ 221 V (220)	B	125.4/25.6
R3306	7030005321	S.RES ERA3YED 103V (10K)	B	122.6/25.6
R3307	7030005321	S.RES ERA3YED 103V (10K)	B	123.2/37.3
R3308	7030005321	S.RES ERA3YED 103V (10K)	B	124.6/30.7
R3309	7030009591	S.RES ERA3YED 472V (4.7K)	B	119.2/25.6
R3310	7030005321	S.RES ERA3YED 103V (10K)	B	120.1/36.6
R3311	7030009591	S.RES ERA3YED 472V (4.7K)	B	116.7/33.8
R3312	7030003320	S.RES ERJ3GEYJ 101 V (100)	T	121.7/38.8
R3313	7030003320	S.RES ERJ3GEYJ 101 V (100)	T	123.5/36.9
R3401	7030003320	S.RES ERJ3GEYJ 101 V (100)	T	106/41.6
R3402	7030003280	S.RES ERJ3GEYJ 470 V (47)	T	104.7/41.6
R3403	7030007230	S.RES ERA3YED 102V (1K)	B	94.1/33.3
R3405	7030007230	S.RES ERA3YED 102V (1K)	B	95.6/34.6
R3406	7030007230	S.RES ERA3YED 102V (1K)	B	97.7/38.2
R3407	7030007230	S.RES ERA3YED 102V (1K)	B	104.4/38.5
R3408	7030007230	S.RES ERA3YED 102V (1K)	B	109.2/36.9
R3409	7030009591	S.RES ERA3YED 472V (4.7K)	T	107.3/41.6
R3410	7030007230	S.RES ERA3YED 102V (1K)	T	108.6/41.6
R3411	7030003320	S.RES ERJ3GEYJ 101 V (100)	T	102.2/34.2
R3412	7030003320	S.RES ERJ3GEYJ 101 V (100)	T	105.8/34.3
R3413	7030003440	S.RES ERJ3GEYJ 102 V (1K)	T	110.7/48.5
R3414	7030003410	S.RES ERJ3GEYJ 561 V (560)	B	114.2/48.4
R3501	7030003400	S.RES ERJ3GEYJ 471 V (470)	B	109.4/55.5
R3502	7030003630	S.RES ERJ3GEYJ 393 V (39K)	T	108.6/52.4
R3503	7030003560	S.RES ERJ3GEYJ 103 V (10K)	T	111.8/56.3
R3504	7030003600	S.RES ERJ3GEYJ 223 V (22K)	T	111.8/55
R3505	7030003600	S.RES ERJ3GEYJ 223 V (22K)	T	111.8/53.7
R3506	7030003560	S.RES ERJ3GEYJ 103 V (10K)	T	108.6/53.7
R3507	7030003460	S.RES ERJ3GEYJ 152 V (1.5K)	T	111.8/57.6
R3508	7030003320	S.RES ERJ3GEYJ 101 V (100)	T	102.6/57.6
R3509	7030003320	S.RES ERJ3GEYJ 101 V (100)	T	112.6/75.4
R3510	7030003320	S.RES ERJ3GEYJ 101 V (100)	T	112.6/78.2
R3511	7030003360	S.RES ERJ3GEYJ 221 V (220)	T	105.4/53.7
R3512	7030003320	S.RES ERJ3GEYJ 101 V (100)	B	111.7/60.4
R3513	7030003520	S.RES ERJ3GEYJ 472 V (4.7K)	T	111.8/58.9
R3514	7030003320	S.RES ERJ3GEYJ 101 V (100)	T	104.1/60.5
R3515	7030003320	S.RES ERJ3GEYJ 101 V (100)	T	107.5/75.4
R3516	7030003640	S.RES ERJ3GEYJ 473 V (47K)	T	102/59.8
R3517	7030003400	S.RES ERJ3GEYJ 471 V (470)	B	111.2/83.8
R3518	7030003490	S.RES ERJ3GEYJ 272 V (2.7K)	B	114.3/83.8
R3519	7030003320	S.RES ERJ3GEYJ 101 V (100)	T	114.6/81.1
R3520	7310005400	S.TRI EVM-3VSX50 BE4 (223)	T	112.1/82.9
R3521	7030003400	S.RES ERJ3GEYJ 471 V (470)	B	110.6/86.5
R3522	7030003550	S.RES ERJ3GEYJ 822 V (8.2K)	B	110.1/77.2
R3523	7030003530	S.RES ERJ3GEYJ 562 V (5.6K)	B	111.6/65.2
R3524	7030003500	S.RES ERJ3GEYJ 332 V (3.3K)	B	112.3/68.4
R3601	7030003860	S.RES ERJ3GE JPW V	B	153.8/71
R3602	7030003320	S.RES ERJ3GEYJ 101 V (100)	B	166.6/79.7
R3603	7030003200	S.RES ERJ3GEYJ 100 V (10)	B	152.3/79.9
R3604	7030003200	S.RES ERJ3GEYJ 100 V (10)	B	156.5/79.7
R3605	7030003280	S.RES ERJ3GEYJ 470 V (47)	B	156.4/76
R3606	7030003680	S.RES ERJ3GEYJ 104 V (100K)	B	166.2/82.5
R3607	7030003550	S.RES ERJ3GEYJ 822 V (8.2K)	B	162.4/81.9
R3608	7030003520	S.RES ERJ3GEYJ 472 V (4.7K)	B	156.9/82.4
R3609	7030003200	S.RES ERJ3GEYJ 100 V (10)	B	159.1/84.6
R3610	7030003300	S.RES ERJ3GEYJ 680 V (68)	B	156.8/87.4
R3611	7030003200	S.RES ERJ3GEYJ 100 V (10)	T	161.7/89.3
R3612	7030003550	S.RES ERJ3GEYJ 822 V (8.2K)	T	164.4/82.8
R3614	7030003680	S.RES ERJ3GEYJ 104 V (100K)	B	163.1/84.3
R3616	7030003520	S.RES ERJ3GEYJ 472 V (4.7K)	T	163/84.6
R3617	7030003400	S.RES ERJ3GEYJ 471 V (470)	T	165/88.5
R3618	7030003340	S.RES ERJ3GEYJ 151 V (150)	T	165.6/84.6
R3619	7030003440	S.RES ERJ3GEYJ 102 V (1K)	T	165/89.8
R3620	7030003360	S.RES ERJ3GEYJ 221 V (220)	B	157.4/96.8
R3651	7030003640	S.RES ERJ3GEYJ 473 V (47K)	T	167.4/77.8
R3701	7030003360	S.RES ERJ3GEYJ 221 V (220)	B	150.5/91.1
R3702	7030003430	S.RES ERJ3GEYJ 821 V (820)	B	124.8/86
R3703	7030004030	S.RES ERJ3GEYJ 5R6 V (5.6)	B	126.4/88
R3704	7030003430	S.RES ERJ3GEYJ 821 V (820)	B	125.7/90.4
R3705	7030003370	S.RES ERJ3GEYJ 271 V (270)	B	132.2/90.3
R3706	7030003400	S.RES ERJ3GEYJ 471 V (470)	B	152.4/95.5
R3707	7030003430	S.RES ERJ3GEYJ 821 V (820)	B	144/92.7
R3708	7030004030	S.RES ERJ3GEYJ 5R6 V (5.6)	B	145.5/90.4
R3709	7030003430	S.RES ERJ3GEYJ 821 V (820)	B	146.9/92.7
R3710	7030003230	S.RES ERJ3GEYJ 180 V (18)	B	135/89.6
R3711	7030003370	S.RES ERJ3GEYJ 271 V (270)	B	137.4/90.3
R3715	7030003370	S.RES ERJ3GEYJ 271 V (270)	B	138.6/100.1
R3716	7030003230	S.RES ERJ3GEYJ 180 V (18)	B	140.7/101.8
R3717	7030003370	S.RES ERJ3GEYJ 271 V (270)	B	141/99.8
R3718	7030003200	S.RES ERJ3GEYJ 100 V (10)	T	141.4/99
R4001	7030003320	S.RES ERJ3GEYJ 101 V (100)	B	83.6/24.4
R4002	7030003320	S.RES ERJ3GEYJ 101 V (100)	B	75.2/18.5
R4003	7030003490	S.RES ERJ3GEYJ 272 V (2.7K)	T	82.7/13.2
R4004	7030003490	S.RES ERJ3GEYJ 272 V (2.7K)	T	79.2/17.7
R4005	7030003320	S.RES ERJ3GEYJ 101 V (100)	B	77.3/6.8
R4006	7030003320	S.RES ERJ3GEYJ 101 V (100)	B	83.5/14.3
R4007	7030003520	S.RES ERJ3GEYJ 472 V (4.7K)	T	81.9/22.5
R4008	7030006601	S.RES ERA3YED 272V (2.7K)	T	77.8/12.4
R4009	7030003440	S.RES ERJ3GEYJ 102 V (1K)	T	77.8/9.4
R4010	7030006601	S.RES ERA3YED 272V (2.7K)	T	79.2/15.2
R4011	7030003440	S.RES ERJ3GEYJ 102 V (1K)	T	77.8/10.7
R4012	7030003440	S.RES ERJ3GEYJ 102 V (1K)	T	73.9/12.4
R4013	7030003440	S.RES ERJ3GEYJ 102 V (1K)	T	76.6/15.2
R4014	7030003680	S.RES ERJ3GEYJ 104 V (100K)	T	78.4/24.4
R4015	7030003540	S.RES ERJ3GEYJ 682 V (6.8K)	T	81.9/25.1
R4016	7030003320	S.RES ERJ3GEYJ 101 V (100)	T	73.9/10.9
R4017	7030003320	S.RES ERJ3GEYJ 101 V (100)	T	74.6/14.5
R4018	7030003690	S.RES ERJ3GEYJ 124 V (120K)	T	76.3/22.4
R4019	7030003380	S.RES ERJ3GEYJ 331 V (330)	T	74.8/22.4
R4020	7410001090	S.ARR EXB-V8V 101JV	T	59/17.8
R4021	7030003320	S.RES ERJ3GEYJ 101 V (100)	B	97/54.8
R4022	7030003560	S.RES ERJ3GEYJ 103 V (10K)	B	97/56.4

[MAIN UNIT]

REF NO.	PARTS NO.	DESCRIPTION	M.	H/V LOCATION
R4101	7030003440	S.RES ERJ3GEYJ 102 V (1K)	T	78.2/67.6
R4102	7030003620	S.RES ERJ3GEYJ 333 V (33K)	T	93.3/69.2
R4103	7030003560	S.RES ERJ3GEYJ 103 V (10K)	B	97.5/73.3
R4104	7030003460	S.RES ERJ3GEYJ 152 V (1.5K)	B	84.3/80.1
R4105	7030003560	S.RES ERJ3GEYJ 103 V (10K)	B	97.5/71.7
R4106	7030003620	S.RES ERJ3GEYJ 333 V (33K)	B	84.5/68.8
R4107	7030003440	S.RES ERJ3GEYJ 102 V (1K)	B	84.5/66.2
R4108	7030003680	S.RES ERJ3GEYJ 104 V (100K)	B	84.5/70.4
R4109	7030003380	S.RES ERJ3GEYJ 331 V (330)	B	97.8/64.6
R4201	7030003320	S.RES ERJ3GEYJ 101 V (100)	B	75.2/57.3
R4202	7030003320	S.RES ERJ3GEYJ 101 V (100)	B	83.8/54.6
R4203	7030003400	S.RES ERJ3GEYJ 471 V (470)	T	95.2/65.8
R4204	7030003320	S.RES ERJ3GEYJ 101 V (100)	B	76.7/40.4
R4205	7030003480	S.RES ERJ3GEYJ 222 V (2.2K)	T	93.9/63.2
R4206	7030003320	S.RES ERJ3GEYJ 101 V (100)	B	82.6/39.3
R4207	7030003440	S.RES ERJ3GEYJ 102 V (1K)	T	91.9/63.2
R4208	7030006601	S.RES ERA3YED 272V (2.7K)	B	71/51.9
R4209	7030003860	S.RES ERJ3GE JPW V	B	71.4/54.4
R4210	7030006601	S.RES ERA3YED 272V (2.7K)	T	82.6/52.8
R4211	7030006601	S.RES ERA3YED 272V (2.7K)	B	73/51.1
R4212	7030006601	S.RES ERA3YED 272V (2.7K)	T	81.2/52.8
R4213	7030005321	S.RES ERA3YED 103V (10K)	T	74.5/45.6
R4214	7030003320	S.RES ERJ3GEYJ 101 V (100)	B	65.4/49.4
R4215	7030005321	S.RES ERA3YED 103V (10K)	T	67.3/45.6
R4216	7030003440	S.RES ERJ3GEYJ 102 V (1K)	B	97/61.2
R4217	7030005321	S.RES ERA3YED 103V (10K)	T	78.2/44.7
R4218	7030003320	S.RES ERJ3GEYJ 101 V (100)	T	76/50.8
R4219	7030005321	S.RES ERA3YED 103V (10K)	T	81.1/44.7
R4220	7030009591	S.RES ERA3YED 472V (4.7K)	B	62.5/41.7
R4221	7030009591	S.RES ERA3YED 472V (4.7K)	T	73.9/43.5
R4222	7030009591	S.RES ERA3YED 472V (4.7K)	T	70.2/45.7
R4223	7030009591	S.RES ERA3YED 472V (4.7K)	T	78.2/41.9
R4224	7030009591	S.RES ERA3YED 472V (4.7K)	T	81.1/41.9
R4225	7030009691	S.RES ERA3YED 101V (100)	T	71.7/45.7
R4226	7030009691	S.RES ERA3YED 101V (100)	T	68.7/43.5
R4227	7030009691	S.RES ERA3YED 101V (100)	T	76.1/41.9
R4228	7030009691	S.RES ERA3YED 101V (100)	T	79.5/41.9
R4229	7030003860	S.RES ERJ3GE JPW V	B	73/54.4
R4230	7030009591	S.RES ERA3YED 472V (4.7K)	B	65.3/41.7
R4231	7030003320	S.RES ERJ3GEYJ 101 V (100)	T	84.1/72.5
R4232	7030003680	S.RES ERJ3GEYJ 104 V (100K)	T	80.7/71.8
R4233	7030003570	S.RES ERJ3GEYJ 123 V (12K)	T	78.8/72.7
R4234	7030003440	S.RES ERJ3GEYJ 102 V (1K)	B	84.5/72
R4235	7030003320	S.RES ERJ3GEYJ 101 V (100)	B	81.2/79.5
R4236	7030003320	S.RES ERJ3GEYJ 101 V (100)	B	80.4/66.3
R4241	7030003450	S.RES ERJ3GEYJ 122 V (1.2K)	B	71.1/72.4
R4242	7030003480	S.RES ERJ3GEYJ 222 V (2.2K)	T	71.9/76.1
R4301	7030003320	S.RES ERJ3GEYJ 101 V (100)	T	60.1/36.3
R4302	7410001090	S.ARR EXB-V8V 101JV	T	60.2/39
R4303	7410001090	S.ARR EXB-V8V 101JV	T	72.2/62.9
R4401	7030003320	S.RES ERJ3GEYJ 101 V (100)	B	83.5/29.7
R4402	7030003320	S.RES ERJ3GEYJ 101 V (100)	B	83/36.6
R4403	7030003490	S.RES ERJ3GEYJ 272 V (2.7K)	T	94.5/59.7
R4404	7030003480	S.RES ERJ3GEYJ 222 V (2.2K)	T	91.9/59.7
R4405	7030003320	S.RES ERJ3GEYJ 101 V (100)	B	85.4/56.9
R4406	7030009591	S.RES ERA3YED 472V (4.7K)	T	74.7/28.4
R4407	7030009591	S.RES ERA3YED 472V (4.7K)	T	74.7/29.7
R4408	7030009591	S.RES ERA3YED 472V (4.7K)	T	74.7/31.1
R4409	7030005341	S.RES ERA3YED 332V (3.3K)	T	76.5/35.4
R4410	7030005341	S.RES ERA3YED 332V (3.3K)	T	76.5/36.8
R4411	7030005341	S.RES ERA3YED 332V (3.3K)	T	79.3/38.1
R4412	7030003680	S.RES ERJ3GEYJ 104 V (100K)	T	90/60.4
R4413	7030009591	S.RES ERA3YED 472V (4.7K)	T	79/26.7
R4414	7030009961	S.RES ERA3YED 221V (220)	T	79/27.9
R4415	7030009961	S.RES ERA3YED 221V (220)	T	77.5/31.1
R4416	7030005341	S.RES ERA3YED 332V (3.3K)	T	79.3/35.4
R4417	7030009861	S.RES ERA3YED 471V (470)	T	76.5/34
R4418	7030009861	S.RES ERA3YED 471V (470)	T	76.5/38.1
R4419	7030003560	S.RES ERJ3GEYJ 103 V (10K)	T	81.6/60.8
R4420	7030003460	S.RES ERJ3GEYJ 152 V (1.5K)	T	84.5/56.6
R4421	7030003650	S.RES ERJ3GEYJ 563 V (56K)	B	84.4/63.2
R4422	7030003470	S.RES ERJ3GEYJ 182 V (1.8K)	T	85.8/59.3
R4423	7030003500	S.RES ERJ3GEYJ 332 V (3.3K)	T	89.7/57.1
R4424	7030003480	S.RES ERJ3GEYJ 222 V (2.2K)	T	87.7/56.6
R4425	7030003860	S.RES ERJ3GE JPW V	T	82.4/29.9
R4426	7030003340	S.RES ERJ3GEYJ 151 V (150)	T	87.8/63.8
R4428	7030003380	S.RES ERJ3GEYJ 331 V (330)	T	89.7/55.8
R4430	7030003320	S.RES ERJ3GEYJ 101 V (100)	B	97/59.6
R4501	7030003320	S.RES ERJ3GEYJ 101 V (100)	B	62.8/88.5
R4502	7030003200	S.RES ERJ3GEYJ 100 V (10)	T	67.3/83.6
R4503	7030003320	S.RES ERJ3GEYJ 101 V (100)	B	69.8/84.4
R4504	7030003320	S.RES ERJ3GEYJ 101 V (100)	B	70.4/87.1
R4505	7030003680	S.RES ERJ3GEYJ 104 V (100K)	T	67.3/88.7
R4506	7030003320	S.RES ERJ3GEYJ 101 V (100)	T	69.3/91.3
R4507	7030003320	S.RES ERJ3GEYJ 101 V (100)	T	66.4/90.5
R5001	7410000720	S.ARR EXB-V8V 473JV (47K)	T	27.7/13.3
R5002	7410000720	S.ARR EXB-V8V 473JV (47K)	T	25.4/9.1
R5003	7030003860	S.RES ERJ3GE JPW V	B	46.7/33.3
R5005	7030003860	S.RES ERJ3GE JPW V	B	55.6/30.2
R5006	7410000720	S.ARR EXB-V8V 473JV (47K)	T	54.1/10.8
R5007	7030003860	S.RES ERJ3GE JPW V	B	55.7/32.4
R5008	7410000720	S.ARR EXB-V8V 473JV (47K)	T	18.6/9.1
R5009	7030003640	S.RES ERJ3GEYJ 473 V (47K)	T	14.7/9.2
R5010	7030003640	S.RES ERJ3GEYJ 473 V (47K)	T	62/13.1
R5011	7030003720	S.RES ERJ3GEYJ 224 V (220K)	B	51.1/26
R5012	7030003860	S.RES ERJ3GE JPW V	B	54.7/28.7
R5013	7030003860	S.RES ERJ3GE JPW V	T	50.7/10.3
R5101	7410000720	S.ARR EXB-V8V 473JV (47K)	T	28.2/48.6
R5102	7030003640	S.RES ERJ3GEYJ 473 V (47K)	T	24.2/48.6
R5103	7410000720	S.ARR EXB-V8V 473JV (47K)	T	37/52.7
R5104	7410000720	S.ARR EXB-V8V 473JV (47K)	T	37.1/48.5
R5105	7410000720	S.ARR EXB-V8V 473JV (47K)	T	32.7/44.6
R5401	7410001100	S.ARR EXB-V8V 472JV (4.7K)	T	14.4/37.1
R5402	7410001100	S.ARR EXB-V8V 472JV (4.7K)	T	42.9/84.7

M.=Mounted side (T: Mounted on the Top side, B: Mounted on the Bottom side)
S.=Surface mount

[MAIN UNIT]

REF NO.	PARTS NO.	DESCRIPTION	M.	H/V LOCATION
R6001	7030003700	S.RES ERJ3GEYJ 154 V (150K)	T	144.2/111.3
R6002	7030003680	S.RES ERJ3GEYJ 104 V (100K)	T	149.4/109.8
R6003	7030003690	S.RES ERJ3GEYJ 124 V (120K)	T	146.5/112.5
R6004	7030003690	S.RES ERJ3GEYJ 124 V (120K)	T	148.5/112.1
R6005	7030003680	S.RES ERJ3GEYJ 104 V (100K)	T	152.1/111
R6006	7030003340	S.RES ERJ3GEYJ 151 V (150)	B	76.7/95.4
R6007	7030003260	S.RES ERJ3GEYJ 330 V (33)	B	73.9/96.1
R6008	7030003200	S.RES ERJ3GEYJ 100 V (10)	T	72.4/110.7
R6009	7030003340	S.RES ERJ3GEYJ 151 V (150)	B	71.2/95
R6010	7030003320	S.RES ERJ3GEYJ 101 V (100)	B	70.7/98.1
R6011	7030003680	S.RES ERJ3GEYJ 104 V (100K)	T	71.6/104.7
R6012	7030003360	S.RES ERJ3GEYJ 221 V (220)	T	159.4/115.3
R6013	7030003360	S.RES ERJ3GEYJ 221 V (220)	T	72.1/102.8
R6014	7030010520	S.RES ERJ1TYJ 101U (100)	B	113.4/95.8
R6015	7410001090	S.ARR EXB-V8V 101JV	T	81.9/101.7
R6016	7030003340	S.RES ERJ3GEYJ 151 V (150)	B	72.4/110.1
R6018	7030003540	S.RES ERJ3GEYJ 682 V (6.8K)	T	86/131.6
R6019	7030003860	S.RES ERJ3GE JPW V	T	70.3/125.5
R6020	7030003480	S.RES ERJ3GEYJ 222 V (2.2K)	B	158/118
R6021	7030003520	S.RES ERJ3GEYJ 472 V (4.7K)	T	78.3/102.1
R6023	7030003560	S.RES ERJ3GEYJ 103 V (10K)	T	77.8/134.2
R6024	7030003560	S.RES ERJ3GEYJ 103 V (10K)	T	76.5/134.2
R6025	7030003440	S.RES ERJ3GEYJ 102 V (1K)	B	155.3/118.7
R6026	7030003460	S.RES ERJ3GEYJ 152 V (1.5K)	B	152.6/118
R6028	7030003400	S.RES ERJ3GEYJ 471 V (470)	T	74.8/105.5
R6029	7030003400	S.RES ERJ3GEYJ 471 V (470)	T	74.3/107.4
R6031	7030003440	S.RES ERJ3GEYJ 102 V (1K)	T	106/81.7
R6032	7030003320	S.RES ERJ3GEYJ 101 V (100)	B	101.6/91
R6033	7030003860	S.RES ERJ3GE JPW V	B	85.8/94.5
R6034	7030003440	S.RES ERJ3GEYJ 102 V (1K)	T	150.9/117.1
R6035	7410001090	S.ARR EXB-V8V 101JV	T	82.4/122.3
R6036	7030003440	S.RES ERJ3GEYJ 102 V (1K)	T	103.2/80.4
R6037	7030003560	S.RES ERJ3GEYJ 103 V (10K)	T	101.9/84.7
R6038	7030003580	S.RES ERJ3GEYJ 153 V (15K)	T	148.8/116.5
R6040	7030003560	S.RES ERJ3GEYJ 103 V (10K)	T	101.9/83.4
R6041	7030003610	S.RES ERJ3GEYJ 273 V (27K)	T	83.7/109.7
R6042	7030003730	S.RES ERJ3GEYJ 274 V (270K)	B	104.7/86.2
R6043	7310005400	S.TRI EVM-3VSX50 BE4 (223)	T	146.4/116.2
R6044	7030003570	S.RES ERJ3GEYJ 123 V (12K)	B	86.7/109
R6045	7030003280	S.RES ERJ3GEYJ 470 V (47)	T	77.4/112.4
R6046	7030003380	S.RES ERJ3GEYJ 331 V (330)	B	101/97.2
R6047	7030003440	S.RES ERJ3GEYJ 102 V (1K)	T	95.3/86.2
R6048	7030003220	S.RES ERJ3GEYJ 150 V (15)	B	101.7/101.5
R6049	7030003370	S.RES ERJ3GEYJ 271 V (270)	B	81.8/113.5
R6050	7030003380	S.RES ERJ3GEYJ 331 V (330)	B	101/103.6
R6051	7030003230	S.RES ERJ3GEYJ 180 V (18)	B	83.9/113.7
R6052	7030003370	S.RES ERJ3GEYJ 271 V (270)	B	86.7/114.2
R6053	7030003440	S.RES ERJ3GEYJ 102 V (1K)	T	94.6/84.2
R6054	7410001090	S.ARR EXB-V8V 101JV	T	87/75.6
R6055	7030003370	S.RES ERJ3GEYJ 271 V (270)	B	98.3/125.8
R6056	7030003290	S.RES ERJ3GEYJ 560 V (56)	B	139.6/116.8
R6057	7030003230	S.RES ERJ3GEYJ 180 V (18)	B	100.4/124.1
R6058	7030003520	S.RES ERJ3GEYJ 472 V (4.7K)	T	97/81.7
R6059	7030003280	S.RES ERJ3GEYJ 470 V (47)	T	111.6/100
R6060	7030003520	S.RES ERJ3GEYJ 472 V (4.7K)	T	95.1/77.9
R6061	7030003320	S.RES ERJ3GEYJ 101 V (100)	B	135.3/111.3
R6062	7030003640	S.RES ERJ3GEYJ 473 V (47K)	T	110.3/102.8
R6063	7030003320	S.RES ERJ3GEYJ 101 V (100)	T	88.6/133.4
R6064	7030003370	S.RES ERJ3GEYJ 271 V (270)	B	101.1/126.8
R6065	7030003440	S.RES ERJ3GEYJ 102 V (1K)	T	138.8/110.3
R6066	7030003500	S.RES ERJ3GEYJ 332 V (3.3K)	T	130.2/110.1
R6067	7030003550	S.RES ERJ3GEYJ 822 V (8.2K)	T	90.6/131
R6068	7030003480	S.RES ERJ3GEYJ 222 V (2.2K)	T	92.7/129.9
R6069	7030003560	S.RES ERJ3GEYJ 103 V (10K)	T	98.5/84.2
R6070	7030003560	S.RES ERJ3GEYJ 103 V (10K)	B	112.4/100.6
R6071	7310005410	S.TRI EVM-3VSX50 BQ4 (473)	T	98.3/77.4
R6072	7030003320	S.RES ERJ3GEYJ 101 V (100)	T	97.2/135.3
R6073	7030003560	S.RES ERJ3GEYJ 103 V (10K)	T	87.1/80.4
R6074	7030003320	S.RES ERJ3GEYJ 101 V (100)	T	80.7/79.5
R6075	7030009591	S.RES ERA3YED 472V (4.7K)	T	80.6/80.9
R6076	7030009591	S.RES ERA3YED 472V (4.7K)	T	84.4/79.1
R6077	7030003630	S.RES ERJ3GEYJ 393 V (39K)	T	89.9/78.6
R6079	7030003280	S.RES ERJ3GEYJ 470 V (47)	T	112.9/100
R6081	7030003570	S.RES ERJ3GEYJ 123 V (12K)	T	89.9/80.4
R6082	7030003330	S.RES ERJ3GEYJ 121 V (120)	B	110.7/126.3
R6083	7030003220	S.RES ERJ3GEYJ 150 V (15)	B	84.4/82.1
R6085	7030003430	S.RES ERJ3GEYJ 821 V (820)	T	113.8/106.3
R6086	7030003290	S.RES ERJ3GEYJ 560 V (56)	B	111.4/128.7
R6087	7030003430	S.RES ERJ3GEYJ 821 V (820)	T	113.8/107.6
R6088	7030003330	S.RES ERJ3GEYJ 121 V (120)	B	109.1/129.4
R6089	7030003200	S.RES ERJ3GEYJ 100 V (10)	T	95.5/112.4
R6090	7030003370	S.RES ERJ3GEYJ 271 V (270)	B	115.2/115.1
R6091	7030003230	S.RES ERJ3GEYJ 180 V (18)	B	114.1/117.3
R6092	7030003370	S.RES ERJ3GEYJ 271 V (270)	B	113.3/115.2
R6093	7030003680	S.RES ERJ3GEYJ 104 V (100K)	T	90.4/110.9
R6094	7030003320	S.RES ERJ3GEYJ 101 V (100)	B	90.4/112.4
R6095	7030003200	S.RES ERJ3GEYJ 100 V (10)	T	95.5/109.8
R6096	7030003320	S.RES ERJ3GEYJ 101 V (100)	B	148.3/114.3
R6097	7030003560	S.RES ERJ3GEYJ 103 V (10K)	T	83.3/106.3
R6098	7030003320	S.RES ERJ3GEYJ 101 V (100)	B	95.7/103
R6099	7030003560	S.RES ERJ3GEYJ 103 V (10K)	T	95.5/107.1
R6103	7030003860	S.RES ERJ3GE JPW V	B	161.7/129.6
R6106	7030003430	S.RES ERJ3GEYJ 821 V (820)	B	148.8/126.8
R6107	7030004030	S.RES ERJ3GEYJ 5R6 V (5.6)	B	151/129.1
R6108	7030003430	S.RES ERJ3GEYJ 821 V (820)	B	150.2/131.5
R6110	7030003860	S.RES ERJ3GE JPW V	B	137.6/120.2
R6113	7030003860	S.RES ERJ3GE JPW V	B	125/122.5
R6115	7030003430	S.RES ERJ3GEYJ 821 V (820)	B	162.5/112.7
R6116	7030004030	S.RES ERJ3GEYJ 5R6 V (5.6)	B	159.9/113.4
R6117	7030003430	S.RES ERJ3GEYJ 821 V (820)	B	162.7/114.6
R6120	7030003860	S.RES ERJ3GE JPW V	T	76.5/127.4
R6121	7030003480	S.RES ERJ3GEYJ 222 V (2.2K)	T	79.1/134.2

[MAIN UNIT]

REF NO.	PARTS NO.	DESCRIPTION	M.	H/V LOCATION
C1001	4030011600	S.CER C1608 JB 1E 104K-T	T	28.3/105.4
C1002	4030006860	S.CER C1608 JB 1H 102K-T	B	13.8/93.8
C1003	4030006860	S.CER C1608 JB 1H 102K-T	B	16.7/95.1
C1004	4030006860	S.CER C1608 JB 1H 102K-T	B	13.8/96.4
C1005	4030006860	S.CER C1608 JB 1H 102K-T	B	16.7/97.7
C1006	4030006860	S.CER C1608 JB 1H 102K-T	B	13.8/99
C1007	4030006860	S.CER C1608 JB 1H 102K-T	B	16.7/100.3
C1008	4030006860	S.CER C1608 JB 1H 102K-T	B	13.8/101.6
C1009	4030006860	S.CER C1608 JB 1H 102K-T	B	16.7/102.9
C1010	4030006860	S.CER C1608 JB 1H 102K-T	B	13.8/104.2
C1011	4030006860	S.CER C1608 JB 1H 102K-T	B	16.7/106.9
C1012	4030006860	S.CER C1608 JB 1H 102K-T	B	13.8/108.1
C1013	4030006860	S.CER C1608 JB 1H 102K-T	B	16.6/109.5
C1014	4030006860	S.CER C1608 JB 1H 102K-T	T	28.4/104.1
C1015	4030006860	S.CER C1608 JB 1H 102K-T	T	28.3/106.7
C1016	4030006860	S.CER C1608 JB 1H 102K-T	T	28.3/108
C1017	4030006860	S.CER C1608 JB 1H 102K-T	T	28.3/109.3
C1018	4030006860	S.CER C1608 JB 1H 102K-T	T	28.3/110.6
C1019	4030006860	S.CER C1608 JB 1H 102K-T	T	28.3/111.9
C1020	4030006860	S.CER C1608 JB 1H 102K-T	T	28.3/113.2
C1021	4030006860	S.CER C1608 JB 1H 102K-T	B	13.8/110.7
C1051	4030006860	S.CER C1608 JB 1H 102K-T	T	31.1/117.8
C1052	4030006860	S.CER C1608 JB 1H 102K-T	T	31.1/116.5
C1053	4030006860	S.CER C1608 JB 1H 102K-T	T	31.1/115.2
C1054	4030006860	S.CER C1608 JB 1H 102K-T	T	31.1/113.9
C1055	4030006860	S.CER C1608 JB 1H 102K-T	T	31.1/112.6
C1056	4030006860	S.CER C1608 JB 1H 102K-T	T	31.1/111.3
C1057	4030006860	S.CER C1608 JB 1H 102K-T	T	31.1/110
C1058	4030006860	S.CER C1608 JB 1H 102K-T	T	31.1/108.7
C1059	4030006860	S.CER C1608 JB 1H 102K-T	T	31.1/107.4
C1060	4030006860	S.CER C1608 JB 1H 102K-T	T	31.1/106.1
C1061	4030006860	S.CER C1608 JB 1H 102K-T	T	31.1/104.8
C1062	4030006860	S.CER C1608 JB 1H 102K-T	T	31.1/103.5
C1063	4030006860	S.CER C1608 JB 1H 102K-T	T	30.3/102.2
C1064	4030006860	S.CER C1608 JB 1H 102K-T	T	30.3/100.9
C1065	4030006860	S.CER C1608 JB 1H 102K-T	T	30.3/99.6
C1066	4030006860	S.CER C1608 JB 1H 102K-T	T	30.3/98.3
C1067	4030006860	S.CER C1608 JB 1H 102K-T	T	30/97
C1068	4030006860	S.CER C1608 JB 1H 102K-T	T	30.4/95.7
C1069	4030006860	S.CER C1608 JB 1H 102K-T	T	30.4/94.4
C1070	4030006860	S.CER C1608 JB 1H 102K-T	T	31.1/93.1
C1071	4030006860	S.CER C1608 JB 1H 102K-T	T	31.1/91.8
C1072	4030006860	S.CER C1608 JB 1H 102K-T	T	31.1/90.5
C1073	4030006860	S.CER C1608 JB 1H 102K-T	T	31.1/89.2
C1074	4030006860	S.CER C1608 JB 1H 102K-T	T	31.1/87.9
C1075	4030006860	S.CER C1608 JB 1H 102K-T	T	31.1/86.6
C1076	4030006860	S.CER C1608 JB 1H 102K-T	T	31.1/85.3
C1101	4030017490	S.CER C1608 JB 1A 105K-T	T	7.7/98.4
C1111	4030017490	S.CER C1608 JB 1A 105K-T	T	7.7/106
C1201	4030011600	S.CER C1608 JB 1E 104K-T	B	50.7/128.2
C1202	4030011600	S.CER C1608 JB 1E 104K-T	B	35.6/129.3
C1252	4030017490	S.CER C1608 JB 1A 105K-T	B	42.2/121.6
C1253	4030006900	S.CER C1608 JB 1H 103K-T	B	44.6/121.1
C1254	4030006900	S.CER C1608 JB 1H 103K-T	B	43.5/118
C1256	4030017490	S.CER C1608 JB 1A 105K-T	B	46.7/118
C1257	4030017490	S.CER C1608 JB 1A 105K-T	B	48.3/118.8
C1258	4030009530	S.CER C1608 CH 1H 030B-T	B	49/125.9
C1259	4030019500	S.CER GRM21BB31A106KE18 (GRM40 B)	T	55/114.1
C1260	4030011600	S.CER C1608 JB 1E 104K-T	T	60/113.2
C1301	4030011600	S.CER C1608 JB 1E 104K-T	B	15.8/124.5
C1302	4030011600	S.CER C1608 JB 1E 104K-T	B	17.5/137.8
C1303	4030019500	S.CER GRM21BB31A106KE18 (GRM40 B)	B	6.5/135.6
C1304	4030019500	S.CER GRM21BB31A106KE18 (GRM40 B)	B	27.6/138.9
C1305	4030006860	S.CER C1608 JB 1H 102K-T	B	23.6/127.4
C1401	4030011600	S.CER C1608 JB 1E 104K-T	T	57.3/99.5
C1402	4030011600	S.CER C1608 JB 1E 104K-T	T	61.8/99.5
C1403	4030017490	S.CER C1608 JB 1A 105K-T	T	41.5/123.6
C1404	4030011600	S.CER C1608 JB 1E 104K-T	B	56.8/90.4
C1405	4030011600	S.CER C1608 JB 1E 104K-T	B	56.8/102.2
C1407	4030017490	S.CER C1608 JB 1A 105K-T	T	170.9/132.9
C1409	4030011600	S.CER C1608 JB 1E 104K-T	T	61.9/101.4
C1410	4030006860	S.CER C1608 JB 1H 102K-T	T	64.5/95.6
C1601	4030011600	S.CER C1608 JB 1E 104K-T	T	1.8/111.3
C1901	4030006900	S.CER C1608 JB 1H 103K-T	T	154.6/146.4
C1902	4030011340	S.CER C1608 CH 1H 471J-T	T	152.7/142.9
C1903	4030011340	S.CER C1608 CH 1H 471J-T	T	151.3/142.9
C2001	4030006900	S.CER C1608 JB 1H 103K-T	T	174.5/122.8
C2002	4030006900	S.CER C1608 JB 1H 103K-T	T	174.5/126.3
C2003	4030006900	S.CER C1608 JB 1H 103K-T	T	174.5/114.9
C2004	4030006860	S.CER C1608 JB 1H 102K-T	T	174.5/132.5
C2005	4030006900	S.CER C1608 JB 1H 103K-T	T	174.5/120.2
C2006	4030006900	S.CER C1608 JB 1H 103K-T	T	174.5/124.1
C2007	4030006900	S.CER C1608 JB 1H 103K-T	T	174.5/118
C2008	4030006900	S.CER C1608 JB 1H 103K-T	T	174.5/129.4
C2009	4030006900	S.CER C1608 JB 1H 103K-T	T	174.5/135.6
C2010	4030006900	S.CER C1608 JB 1H 103K-T	T	174.5/138.7
C2011	4030019090	S.CER C2012 JB 1C 225M-T	T	172.3/77.8
C2012	4030019090	S.CER C2012 JB 1C 225M-T	B	171.5/85.9
C2013	4030018620	S.CER C1608 CH 1H 222J-T	B	166.7/73
C2014	4030019500	S.CER GRM21BB31A106KE18 (GRM40 B)	B	175.3/82
C2015	4510009910	S.ELE 16 CE 10 LH	T	168.7/70.9
C2016	4030006860	S.CER C1608 JB 1H 102K-T	B	179.7/81.7
C2031	4030006900	S.CER C1608 JB 1H 103K-T	T	170.2/148.1
C2041	4030006900	S.CER C1608 JB 1H 103K-T	T	177.9/145.4
C2042	4030006900	S.CER C1608 JB 1H 103K-T	T	188.2/148.1
C2051	4030006900	S.CER C1608 JB 1H 103K-T	T	163.2/148.1
C2062	4510009910	S.ELE 16 CE 10 LH	T	173.5/70.9
C2063	4510009910	S.ELE 16 CE 10 LH	T	181.3/72.4
C2101	4030006900	S.CER C1608 JB 1H 103K-T	T	156/32.4
C2102	4030007040	S.CER C1608 CH 1H 180J-T	T	158.2/27.3

M.=Mounted side (T: Mounted on the Top side, B: Mounted on the Bottom side)
S.=Surface mount

[MAIN UNIT]

REF NO.	PARTS NO.	DESCRIPTION	M.	H/V LOCATION
C2103	4030007040	S.CER C1608 CH 1H 180J-T	T	160.9/28.6
C2104	4030011600	S.CER C1608 JB 1E 104K-T	T	158.5/29.7
C2105	4030011600	S.CER C1608 JB 1E 104K-T	T	155.3/40
C2106	4030019500	S.CER GRM21BB31A106KE18 (GRM40 B)	T	163/28.8
C2107	4030011600	S.CER C1608 JB 1E 104K-T	T	165.3/29.8
C2108	4030011600	S.CER C1608 JB 1E 104K-T	T	167.6/29.9
C2109	4030011600	S.CER C1608 JB 1E 104K-T	T	168.9/35.5
C2110	4030019500	S.CER GRM21BB31A106KE18 (GRM40 B)	T	156.8/39.3
C2111	4030011600	S.CER C1608 JB 1E 104K-T	T	178.7/33.4
C2112	4030011600	S.CER C1608 JB 1E 104K-T	T	178.7/27.7
C2113	4030011600	S.CER C1608 JB 1E 104K-T	T	164.2/40.1
C2114	4030017490	S.CER C1608 JB 1A 105K-T	T	175.6/31.6
C2115	4030017490	S.CER C1608 JB 1A 105K-T	T	176/25.6
C2116	4030011330	S.CER C1608 CH 1H 391J-T	B	180.8/72.8
C2117	4030006860	S.CER C1608 JB 1H 102K-T	B	169.2/69.6
C2118	4030019500	S.CER GRM21BB31A106KE18 (GRM40 B)	T	154.3/54.1
C2119	4030019500	S.CER GRM21BB31A106KE18 (GRM40 B)	T	160.9/61.5
C2120	4030019500	S.CER GRM21BB31A106KE18 (GRM40 B)	T	158.1/31.9
C2121	4030019500	S.CER GRM21BB31A106KE18 (GRM40 B)	T	171.4/41.5
C2122	4030017490	S.CER C1608 JB 1A 105K-T	T	173/38.7
C2123	4030017490	S.CER C1608 JB 1A 105K-T	T	173.8/37.4
C2124	4030011600	S.CER C1608 JB 1E 104K-T	T	173/40
C2131	4030019500	S.CER GRM21BB31A106KE18 (GRM40 B)	T	177.5/55.7
C2132	4550007480	S.TAN F930J106MAABMA	B	171.9/56.8
C2133	4030019500	S.CER GRM21BB31A106KE18 (GRM40 B)	T	155.2/47.6
C2134	4030011600	S.CER C1608 JB 1E 104K-T	T	158.1/47.5
C2135	4030011600	S.CER C1608 JB 1E 104K-T	T	172.5/58.8
C2137	4550007230	S.TAN F930J475MAABMA	B	171.9/49.5
C2138	4030019500	S.CER GRM21BB31A106KE18 (GRM40 B)	T	165.9/46.7
C2139	4030019500	S.CER GRM21BB31A106KE18 (GRM40 B)	T	164.1/46.7
C2140	4030011600	S.CER C1608 JB 1E 104K-T	T	162.6/47.1
C2141	4030011600	S.CER C1608 JB 1E 104K-T	T	166.5/54
C2142	4030019500	S.CER GRM21BB31A106KE18 (GRM40 B)	T	168.1/53.9
C2143	4030007040	S.CER C1608 CH 1H 180J-T	T	161/58.7
C2144	4030007040	S.CER C1608 CH 1H 180J-T	T	161/60
C2145	4550007480	S.TAN F930J106MAABMA	T	167.4/59.7
C2146	4550007230	S.TAN F930J475MAABMA	B	171.9/52.3
C2201	4030007010	S.CER C1608 CH 1H 100D-T	T	191.7/40.4
C2202	4030011600	S.CER C1608 JB 1E 104K-T	B	185/54.2
C2203	4030011600	S.CER C1608 JB 1E 104K-T	B	187.1/35.4
C2300	4030006860	S.CER C1608 JB 1H 102K-T	B	96.5/12
C2301	4030006900	S.CER C1608 JB 1H 103K-T	B	146.4/5.3
C2302	4030006900	S.CER C1608 JB 1H 103K-T	T	148.4/5.8
C2303	4030006900	S.CER C1608 JB 1H 103K-T	B	140.2/5.3
C2304	4030006900	S.CER C1608 JB 1H 103K-T	T	142.4/5.7
C2305	4510009920	S.ELE 16 CE 100 LH	T	28/78.4
C2306	4030011600	S.CER C1608 JB 1E 104K-T	B	10.5/69.2
C2307	4030011340	S.CER C1608 CH 1H 471J-T	B	180.8/13
C2309	4030019500	S.CER GRM21BB31A106KE18 (GRM40 B)	T	90.2/4
C2310	4510009930	S.ELE 10 CE 10 FN	T	96.4/28.3
C2311	4030011600	S.CER C1608 JB 1E 104K-T	T	106.7/4.6
C2312	4510009370	ELE 16 ME 470 CZ		
C2313	4510009390	ELE 16 ME 2200 CZ		
C2314	4340000260	S.MYL ECPU1C104MA5	B	111.3/4.7
C2315	4030011600	S.CER C1608 JB 1E 104K-T	B	102.2/8.3
C2316	4030018580	S.CER C1608 CH 1H 821J-T	B	100.9/13.7
C2317	4510009370	ELE 16 ME 470 CZ		
C2318	4030018620	S.CER C1608 CH 1H 222J-T	B	114.4/4.6
C2319	4550003220	S.TAN TEESVA 1E 105M8R	B	114.1/12.9
C2321	4030008950	S.CER C2012 JB 1C 823K-T	B	111.4/13.2
C2322	4030018640	S.CER C2012 CH 1H 103J-T	B	108.9/11.5
C2323	4030017490	S.CER C1608 JB 1A 105K-T	B	104.1/13.7
C2325	4550002890	S.TAN TEESVA 1A 225M8R	B	111.4/19.2
C2326	4030019500	S.CER GRM21BB31A106KE18 (GRM40 B)	T	96.4/16.1
C2327	4510009910	S.ELE 16 CE 10 LH	T	96.4/23.5
C2328	4030011600	S.CER C1608 JB 1E 104K-T	T	109.3/18.4
C2331	4030019500	S.CER GRM21BB31A106KE18 (GRM40 B)	B	90.9/12.2
C2333	4030017490	S.CER C1608 JB 1A 105K-T	T	87.6/8.7
C2334	4550007480	S.TAN F930J106MAABMA	T	94.3/17
C2335	4030019500	S.CER GRM21BB31A106KE18 (GRM40 B)	T	92/4
C2336	4030011600	S.CER C1608 JB 1E 104K-T	B	93.9/10
C2351	4030018620	S.CER C1608 CH 1H 222J-T	B	91.8/20.5
C2352	4550007480	S.TAN F930J106MAABMA	B	94.3/28
C2361	4030017810	S.CER C1608 CH 1H 102J-T	B	100.8/25.5
C2362	4510009930	S.ELE 10 CE 10 FN	T	105.7/29.6
C2363	4030011600	S.CER C1608 JB 1E 104K-T	T	106.3/25.7
C2364	4030011600	S.CER C1608 JB 1E 104K-T	T	97.4/18.3
C2401	4030006900	S.CER C1608 JB 1H 103K-T	B	190.6/80.2
C2402	4030011340	S.CER C1608 CH 1H 471J-T	B	188.6/80.2
C2501	4030006900	S.CER C1608 JB 1H 103K-T	B	175.1/96.5
C2502	4030011340	S.CER C1608 CH 1H 471J-T	B	175.8/94.9
C2601	4550003220	S.TAN TEESVA 1E 105M8R	B	4/61.3
C2602	4030019500	S.CER GRM21BB31A106KE18 (GRM40 B)	T	13.6/67
C2603	4030017490	S.CER C1608 JB 1A 105K-T	T	17.9/62.6
C2604	4030017490	S.CER C1608 JB 1A 105K-T	T	17.9/64.2
C2605	4030007120	S.CER C1608 CH 1H 820J-T	T	4.7/62.8
C2606	4030019500	S.CER GRM21BB31A106KE18 (GRM40 B)	T	4.8/65.7

[MAIN UNIT]

REF NO.	PARTS NO.	DESCRIPTION	M.	H/V LOCATION
C2607	4030019500	S.CER GRM21BB31A106KE18 (GRM40 B)	T	6.6/66.2
C3001	4030006900	S.CER C1608 JB 1H 103K-T	B	143.1/30.2
C3002	4030006900	S.CER C1608 JB 1H 103K-T	B	143.1/38.6
C3003	4030017810	S.CER C1608 CH 1H 102J-T	B	147.1/36.6
C3004	4030011600	S.CER C1608 JB 1E 104K-T	T	140.6/41
C3005	4030009530	S.CER C1608 CH 1H 030B-T	T	142.8/43.8
C3006	4610001970	S.TRI TZC3P200A110R00 (TZC03P200A1102)	T	145.2/46.6
C3007	4030017810	S.CER C1608 CH 1H 102J-T	B	146.1/46.2
C3008	4030017810	S.CER C1608 CH 1H 102J-T	B	144.2/46.9
C3009	4030011600	S.CER C1608 JB 1E 104K-T	T	86.9/20.2
C3010	4030019500	S.CER GRM21BB31A106KE18 (GRM40 B)	T	86.2/28.8
C3012	4030011600	S.CER C1608 JB 1E 104K-T	T	89.6/24
C3201	4030017870	S.CER C1608 CH 1H 681J-T	B	118.3/39.6
C3202	4030011600	S.CER C1608 JB 1E 104K-T	B	116.1/43.6
C3203	4510009920	S.ELE 16 CE 100 LH	T	119/44.3
C3204	4030007160	S.CER C1608 CH 1H 181J-T	B	118.2/47.5
C3205	4030009350	S.CER C1608 CH 1H 3R5B-T	B	117.4/49.1
C3206	4030017870	S.CER C1608 CH 1H 681J-T	B	117.4/55.5
C3207	4030011330	S.CER C1608 CH 1H 391J-T	B	118.2/53.9
C3208	4030011600	S.CER C1608 JB 1E 104K-T	T	119.8/48.5
C3209	4030011600	S.CER C1608 JB 1E 104K-T	T	126.8/41.8
C3210	4510009920	S.ELE 16 CE 100 LH	T	132.1/43.4
C3211	4510009920	S.ELE 16 CE 100 LH	T	119/61.1
C3212	4030011600	S.CER C1608 JB 1E 104K-T	T	119.8/65.3
C3213	4030011600	S.CER C1608 JB 1E 104K-T	T	128.7/65.3
C3214	4510009920	S.ELE 16 CE 100 LH	T	129.5/61.1
C3215	4030007170	S.CER C1608 CH 1H 221J-T	B	118.4/60
C3216	4030011600	S.CER C1608 JB 1E 104K-T	T	118.4/70.5
C3217	4510009910	S.ELE 16 CE 10 LH	T	121.5/68.9
C3218	4030018800	S.CER C3216 CH 1H 223J-T	B	119.5/68.6
C3219	4030007170	S.CER C1608 CH 1H 221J-T	B	129.1/59.9
C3220	4030018800	S.CER C3216 CH 1H 223J-T	B	125.2/66.6
C3221	4030010760	S.CER C1608 CH 1H 331J-T	T	122.3/74.7
C3222	4030017490	S.CER C1608 JB 1A 105K-T	T	122.3/77.7
C3223	4030006900	S.CER C1608 JB 1H 103K-T	T	123.6/77.7
C3224	4030007010	S.CER C1608 CH 1H 100D-T	T	118.4/77.7
C3225	4550003220	S.TAN TEESVA 1E 105M8R	B	122.1/76
C3226	4030018640	S.CER C2012 CH 1H 103J-T	B	145.5/62.7
C3227	4030010760	S.CER C1608 CH 1H 331J-T	T	128.8/74.7
C3228	4030017490	S.CER C1608 JB 1A 105K-T	T	128.8/77.7
C3229	4030006900	S.CER C1608 JB 1H 103K-T	T	130.1/77.7
C3230	4030007010	S.CER C1608 CH 1H 100D-T	T	123.6/74.7
C3231	4550003220	S.TAN TEESVA 1E 105M8R	B	129.4/73.6
C3232	4030018640	S.CER C2012 CH 1H 103J-T	B	137.7/65.9
C3233	4510009920	S.ELE 16 CE 100 LH	T	118.3/54
C3234	4030011600	S.CER C1608 JB 1E 104K-T	T	119.8/49.8
C3235	4030011600	S.CER C1608 JB 1E 104K-T	T	126.8/45
C3236	4510009920	S.ELE 16 CE 100 LH	T	129.5/50.5
C3237	4030009920	S.CER C1608 CH 1H 050B-T	B	151/69.4
C3239	4030009920	S.CER C1608 CH 1H 050B-T	B	151/71
C3301	4030006900	S.CER C1608 JB 1H 103K-T	B	131/38.5
C3302	4510009920	S.ELE 16 CE 100 LH	T	117.5/36.5
C3303	4030011600	S.CER C1608 JB 1E 104K-T	T	121.7/35.7
C3304	4030011600	S.CER C1608 JB 1E 104K-T	T	123.5/33.3
C3305	4510009920	S.ELE 16 CE 100 LH	T	120/28.7
C3306	4030011600	S.CER C1608 JB 1E 104K-T	B	132.8/35.8
C3307	4030011600	S.CER C1608 JB 1E 104K-T	B	128.7/25.2
C3401	4030017810	S.CER C1608 CH 1H 102J-T	T	106/44.4
C3403	4030018590	S.CER C1608 CH 1H 122J-T	B	94.9/36.7
C3404	4030018600	S.CER C1608 CH 1H 152J-T	B	99/33.9
C3405	4030018620	S.CER C1608 CH 1H 222J-T	B	110.5/34.1
C3406	4030007140	S.CER C1608 CH 1H 121J-T	B	97.7/33.9
C3407	4030011330	S.CER C1608 CH 1H 391J-T	B	99/39.7
C3408	4030018620	S.CER C1608 CH 1H 222J-T	B	109.2/34.1
C3409	4030011280	S.CER C1608 CH 1H 271J-T	B	110.5/38.4
C3410	4030011600	S.CER C1608 JB 1E 104K-T	T	107.3/44.4
C3411	4030019500	S.CER GRM21BB31A106KE18 (GRM40 B)	T	104.4/47.6
C3412	4030011600	S.CER C1608 JB 1E 104K-T	T	106/47.3
C3413	4030011600	S.CER C1608 JB 1E 104K-T	T	108.6/44.4
C3414	4510009920	S.ELE 16 CE 100 LH	T	98/35.5
C3415	4030011600	S.CER C1608 JB 1E 104K-T	T	102.2/36.9
C3416	4030011600	S.CER C1608 JB 1E 104K-T	T	105.8/37
C3417	4510009920	S.ELE 16 CE 100 LH	T	110.1/35.5
C3418	4030011600	S.CER C1608 JB 1E 104K-T	T	106/50.1
C3501	4030011600	S.CER C1608 JB 1E 104K-T	B	109.4/52.7
C3502	4030011600	S.CER C1608 JB 1E 104K-T	T	105.4/52.4
C3503	4030019500	S.CER GRM21BB31A106KE18 (GRM40 B)	B	102.3/50.3
C3504	4030006900	S.CER C1608 JB 1H 103K-T	T	111.8/52.4
C3505	4030006900	S.CER C1608 JB 1H 103K-T	T	108.6/57.6
C3506	4030011600	S.CER C1608 JB 1E 104K-T	T	105.4/57.6
C3507	4030011600	S.CER C1608 JB 1E 104K-T	T	111.3/75.4
C3509	4030011600	S.CER C1608 JB 1E 104K-T	T	105.4/55
C3510	4030011600	S.CER C1608 JB 1E 104K-T	T	111.3/78.2
C3513	4030006900	S.CER C1608 JB 1H 103K-T	B	115/81.8
C3515	4030011600	S.CER C1608 JB 1E 104K-T	B	110/58.9
C3516	4030006900	S.CER C1608 JB 1H 103K-T	B	110.7/81.4
C3517	4030011600	S.CER C1608 JB 1E 104K-T	B	112.8/81.4
C3518	4030011600	S.CER C1608 JB 1E 104K-T	T	111.7/85.9
C3519	4030019500	S.CER GRM21BB31A106KE18 (GRM40 B)	T	111.9/87.4
C3520	4030011600	S.CER C1608 JB 1E 104K-T	B	111.9/86.5
C3522	4030006900	S.CER C1608 JB 1H 103K-T	T	106.2/75.4
C3601	4030011600	S.CER C1608 JB 1E 104K-T	B	165.8/77.1
C3602	4030011600	S.CER C1608 JB 1E 104K-T	B	160.8/70.9
C3603	4030006860	S.CER C1608 JB 1H 102K-T	B	160.8/72.7
C3604	4030006860	S.CER C1608 JB 1H 102K-T	B	156.4/77.7
C3605	4030007040	S.CER C1608 CH 1H 180J-T	B	157.6/71.9
C3606	4030006900	S.CER C1608 JB 1H 103K-T	B	155.1/82.4
C3607	4030006980	S.CER C1608 CH 1H 070D-T	B	156/84.6

M.=Mounted side (T: Mounted on the Top side, B: Mounted on the Bottom side)
S.=Surface mount

[MAIN UNIT]

REF NO.	PARTS NO.	DESCRIPTION	M.	H/V LOCATION
C3608	4030006900	S.CER C1608 JB 1H 103K-T	T	166.2/82.5
C3609	4030006900	S.CER C1608 JB 1H 103K-T	B	168.5/84.2
C3610	4030007010	S.CER C1608 CH 1H 100D-T	T	163/89.3
C3611	4030011600	S.CER C1608 JB 1E 104K-T	T	165/87.2
C3612	4030010750	S.CER C1608 CH 1H 201J-T	B	161.8/90.8
C3613	4030011600	S.CER C1608 JB 1E 104K-T	T	165/85.9
C3615	4030007150	S.CER C1608 CH 1H 151J-T	B	164.9/94.1
C3616	4030007120	S.CER C1608 CH 1H 820J-T	B	159.6/96
C3651	4030011600	S.CER C1608 JB 1E 104K-T	T	167.4/76.5
C3652	4030019090	S.CER C2012 JB 1C 225M-T	T	164.4/79.8
C3701	4030011340	S.CER C1608 CH 1H 471J-T	T	132.5/91
C3702	4030011600	S.CER C1608 JB 1E 104K-T	B	150.6/95.5
C3704	4030011600	S.CER C1608 JB 1E 104K-T	B	148.7/91.1
C3705	4030006900	S.CER C1608 JB 1H 103K-T	B	163.4/97.9
C3706	4030006900	S.CER C1608 JB 1H 103K-T	B	146.6/85.6
C3715	4030011600	S.CER C1608 JB 1E 104K-T	T	140.8/100.9
C3716	4030011600	S.CER C1608 JB 1E 104K-T	B	144.2/98.5
C3717	4030011600	S.CER C1608 JB 1E 104K-T	T	142.5/103.6
C3718	4030011600	S.CER C1608 JB 1E 104K-T	T	143.3/99.5
C4001	4510009910	S.ELE 16 CE 10 LH	T	89.5/28.4
C4002	4030011600	S.CER C1608 JB 1E 104K-T	B	83.6/22.6
C4003	4030011600	S.CER C1608 JB 1E 104K-T	B	83.5/12.5
C4004	4030011600	S.CER C1608 JB 1E 104K-T	B	84.3/20.6
C4005	4030019500	S.CER GRM21BB31A106KE18 (GRM40 B)	B	83.1/17.9
C4006	4030011600	S.CER C1608 JB 1E 104K-T	B	83.5/8.1
C4007	4030019500	S.CER GRM21BB31A106KE18 (GRM40 B)	B	83.8/6.3
C4008	4030011600	S.CER C1608 JB 1E 104K-T	T	79.2/16.5
C4009	4510009910	S.ELE 16 CE 10 LH	T	88.5/17
C4010	4030011600	S.CER C1608 JB 1E 104K-T	B	83.5/9.7
C4011	4030011600	S.CER C1608 JB 1E 104K-T	T	80.4/10.7
C4012	4030017870	S.CER C1608 CH 1H 681J-T	T	75.8/11.7
C4013	4030017870	S.CER C1608 CH 1H 681J-T	T	76.6/13.7
C4014	4030007080	S.CER C1608 CH 1H 390J-T	T	75.6/24.4
C4015	4030006900	S.CER C1608 JB 1H 103K-T	T	66.8/9.5
C4016	4030018620	S.CER C1608 CH 1H 222J-T	T	73.2/14.5
C4017	4030018620	S.CER C1608 CH 1H 222J-T	T	73/22.4
C4018	4550007470	S.TAN F931A107MNMBMA	B	72.9/10.7
C4019	4550007470	S.TAN F931A107MNMBMA	B	72.9/26.2
C4020	4030011600	S.CER C1608 JB 1E 104K-T	T	73.8/17.6
C4021	4030011600	S.CER C1608 JB 1E 104K-T	T	73.1/19.8
C4022	4030011600	S.CER C1608 JB 1E 104K-T	T	69.2/26.1
C4023	4030011600	S.CER C1608 JB 1E 104K-T	T	70.3/13.3
C4024	4550007470	S.TAN F931A107MNMBMA	B	67.5/27.7
C4025	4030011600	S.CER C1608 JB 1E 104K-T	T	68.1/11.7
C4026	4030011600	S.CER C1608 JB 1E 104K-T	T	67.6/26.1
C4027	4550007470	S.TAN F931A107MNMBMA	B	67.5/13
C4028	4030011600	S.CER C1608 JB 1E 104K-T	T	59/20.3
C4029	4550007470	S.TAN F931A107MNMBMA	B	60.4/19.6
C4030	4030011600	S.CER C1608 JB 1E 104K-T	T	80.4/12.4
C4031	4030011600	S.CER C1608 JB 1E 104K-T	T	81.9/23.8
C4032	4030007090	S.CER C1608 CH 1H 470J-T	B	97/53.2
C4033	4030017490	S.CER C1608 JB 1A 105K-T	T	60.7/10.1
C4034	4030017490	S.CER C1608 JB 1A 105K-T	T	60.7/8.1
C4035	4030011600	S.CER C1608 JB 1E 104K-T	T	58.2/15.3
C4101	4550007480	S.TAN F930J106MAABMA	T	82.5/68.5
C4102	4550007480	S.TAN F930J106MAABMA	T	89.5/69.2
C4106	4030019500	S.CER GRM21BB31A106KE18 (GRM40 B)	B	84.1/74.5
C4107	4030019500	S.CER GRM21BB31A106KE18 (GRM40 B)	B	97.8/68
C4201	4510009910	S.ELE 16 CE 10 LH	T	73.3/54
C4202	4030011600	S.CER C1608 JB 1E 104K-T	B	65.4/47.6
C4203	4030011600	S.CER C1608 JB 1E 104K-T	B	77.3/56.6
C4205	4030019500	S.CER GRM21BB31A106KE18 (GRM40 B)	B	85.8/52.3
C4207	4030019500	S.CER GRM21BB31A106KE18 (GRM40 B)	B	74.4/39.4
C4209	4030019500	S.CER GRM21BB31A106KE18 (GRM40 B)	B	85.2/40.1
C4210	4510009910	S.ELE 16 CE 10 LH	T	68.5/54
C4211	4550007480	S.TAN F930J106MAABMA	T	73.2/48.1
C4212	4550007480	S.TAN F930J106MAABMA	T	67.9/48.1
C4213	4550007480	S.TAN F930J106MAABMA	T	80.5/48.1
C4214	4550007480	S.TAN F930J106MAABMA	T	82.9/44.3
C4215	4030011600	S.CER C1608 JB 1E 104K-T	B	73.4/48.4
C4216	4030011600	S.CER C1608 JB 1E 104K-T	B	65/45.5
C4217	4030011600	S.CER C1608 JB 1E 104K-T	B	76.7/48.4
C4218	4030011600	S.CER C1608 JB 1E 104K-T	B	83/48.4
C4219	4030017810	S.CER C1608 CH 1H 102J-T	T	73.2/45.7
C4220	4030017810	S.CER C1608 CH 1H 102J-T	T	68.8/45.7
C4221	4030017810	S.CER C1608 CH 1H 102J-T	T	77/44.7
C4222	4030017810	S.CER C1608 CH 1H 102J-T	T	79.5/44.7
C4223	4030018620	S.CER C1608 CH 1H 222J-T	T	71.3/43.5
C4224	4030018620	S.CER C1608 CH 1H 222J-T	T	74.1/40.4
C4225	4030011600	S.CER C1608 JB 1E 104K-T	B	79.9/48.4
C4226	4510009910	S.ELE 16 CE 10 LH	T	78.1/53.9
C4227	4030019500	S.CER GRM21BB31A106KE18 (GRM40 B)	B	64.3/39.4
C4228	4550007480	S.TAN F930J106MAABMA	T	88.4/72.5
C4229	4030007140	S.CER C1608 CH 1H 121J-T	T	80.6/73.5
C4231	4030019500	S.CER GRM21BB31A106KE18 (GRM40 B)	B	78.8/78.8
C4232	4030019500	S.CER GRM21BB31A106KE18 (GRM40 B)	B	80.6/68.2
C4236	4030006900	S.CER C1608 JB 1H 103K-T	T	95.2/63.2
C4237	4030007130	S.CER C1608 CH 1H 101J-T	T	80.6/74.7
C4301	4030019500	S.CER GRM21BB31A106KE18 (GRM40 B)	B	70.7/39.4
C4302	4030011600	S.CER C1608 JB 1E 104K-T	B	69.1/39.4
C4303	4030019500	S.CER GRM21BB31A106KE18 (GRM40 B)	T	64.3/44.6
C4304	4030011600	S.CER C1608 JB 1E 104K-T	T	65.8/44.4

[MAIN UNIT]

REF NO.	PARTS NO.	DESCRIPTION	M.	H/V LOCATION
C4305	4030019500	S.CER GRM21BB31A106KE18 (GRM40 B)	B	76.4/66.4
C4306	4030019500	S.CER GRM21BB31A106KE18 (GRM40 B)	T	83.3/63.8
C4307	4030011600	S.CER C1608 JB 1E 104K-T	T	67.6/30.8
C4308	4030017490	S.CER C1608 JB 1A 105K-T	T	67.6/32.1
C4310	4030019500	S.CER GRM21BB31A106KE18 (GRM40 B)	T	62.5/44.6
C4311	4030011600	S.CER C1608 JB 1E 104K-T	T	60.9/44.4
C4401	4030011600	S.CER C1608 JB 1E 104K-T	B	76.1/27.7
C4402	4550007480	S.TAN F930J106MAABMA	T	72.1/30
C4404	4030019500	S.CER GRM21BB31A106KE18 (GRM40 B)	B	83/33.5
C4405	4550007480	S.TAN F930J106MAABMA	T	70/30
C4406	4030011600	S.CER C1608 JB 1E 104K-T	T	73.9/35.4
C4408	4030019500	S.CER GRM21BB31A106KE18 (GRM40 B)	B	84.4/59.9
C4409	4340000510	S.MYL ECHU01153JX5	T	76.9/28.7
C4410	4030018600	S.CER C1608 CH 1H 152J-T	B	79.3/37.6
C4411	4550007480	S.TAN F930J106MAABMA	T	79.9/61.7
C4412	4030018620	S.CER C1608 CH 1H 222J-T	T	81.6/27.9
C4413	4030018620	S.CER C1608 CH 1H 222J-T	T	80.1/31.1
C4414	4030011340	S.CER C1608 CH 1H 471J-T	T	79.3/34
C4415	4030011340	S.CER C1608 CH 1H 471J-T	B	75.9/33.9
C4416	4030018580	S.CER C1608 CH 1H 821J-T	T	89.7/58.4
C4417	4030018580	S.CER C1608 CH 1H 821J-T	T	85.8/56.6
C4418	4030011600	S.CER C1608 JB 1E 104K-T	T	73.9/36.8
C4419	4510009910	S.ELE 16 CE 10 LH	T	89.5/34.3
C4420	4030011600	S.CER C1608 JB 1E 104K-T	B	97/58
C4421	4510009910	S.ELE 16 CE 10 LH	T	96.2/56.1
C4422	4030011600	S.CER C1608 JB 1E 104K-T	T	93.2/59.7
C4423	4030007090	S.CER C1608 CH 1H 470J-T	B	86.2/63.3
C4501	4030011600	S.CER C1608 JB 1E 104K-T	B	70.9/89.9
C4502	4030011600	S.CER C1608 JB 1E 104K-T	T	67.2/84.8
C4503	4030006900	S.CER C1608 JB 1H 103K-T	T	69.3/88.7
C4505	4030006960	S.CER C1608 CH 1H 050C-T	B	41.9/31.4
C5001	4030011600	S.CER C1608 JB 1E 104K-T	T	46.7/37.7
C5002	4030011600	S.CER C1608 JB 1E 104K-T	T	44.9/37.7
C5003	4030011600	S.CER C1608 JB 1E 104K-T	T	42.8/37.7
C5004	4030011600	S.CER C1608 JB 1E 104K-T	T	40.7/37.7
C5005	4030011600	S.CER C1608 JB 1E 104K-T	T	38.8/37.7
C5006	4030011600	S.CER C1608 JB 1E 104K-T	T	35.2/37.7
C5007	4030011600	S.CER C1608 JB 1E 104K-T	T	37.1/37.7
C5008	4030011600	S.CER C1608 JB 1E 104K-T	T	31.5/36
C5009	4030019500	S.CER GRM21BB31A106KE18 (GRM40 B)	T	33.6/38
C5010	4030019500	S.CER GRM21BB31A106KE18 (GRM40 B)	T	32.9/41.4
C5011	4550007470	S.TAN F931A107MNMBMA	B	54/38.5
C5012	4030011600	S.CER C1608 JB 1E 104K-T	T	55.8/28.7
C5014	4030011600	S.CER C1608 JB 1E 104K-T	T	27.3/30.1
C5015	4030011600	S.CER C1608 JB 1E 104K-T	T	27.3/28.6
C5016	4030011600	S.CER C1608 JB 1E 104K-T	T	55.8/26.7
C5017	4030011600	S.CER C1608 JB 1E 104K-T	T	55.8/24.4
C5018	4030011600	S.CER C1608 JB 1E 104K-T	T	55.8/22.9
C5019	4030011600	S.CER C1608 JB 1E 104K-T	T	55.8/21.4
C5020	4030011600	S.CER C1608 JB 1E 104K-T	T	27.3/25.8
C5021	4030011600	S.CER C1608 JB 1E 104K-T	T	27.3/24.1
C5022	4030011600	S.CER C1608 JB 1E 104K-T	T	27.3/22.3
C5023	4030011600	S.CER C1608 JB 1E 104K-T	T	27.3/20.7
C5024	4030011600	S.CER C1608 JB 1E 104K-T	T	27.3/18.3
C5025	4030011600	S.CER C1608 JB 1E 104K-T	T	55.4/15.9
C5026	4030011600	S.CER C1608 JB 1E 104K-T	T	27.3/17
C5027	4030011600	S.CER C1608 JB 1E 104K-T	T	48.1/9.2
C5028	4030011600	S.CER C1608 JB 1E 104K-T	T	46.5/9.2
C5029	4030011600	S.CER C1608 JB 1E 104K-T	T	42.6/9.2
C5030	4030011600	S.CER C1608 JB 1E 104K-T	T	41/9.2
C5031	4030011600	S.CER C1608 JB 1E 104K-T	T	38.9/9.2
C5032	4030011600	S.CER C1608 JB 1E 104K-T	T	36.8/9.2
C5033	4030011600	S.CER C1608 JB 1E 104K-T	T	34.5/9.2
C5034	4030011600	S.CER C1608 JB 1E 104K-T	T	32.7/9.2
C5036	4550007470	S.TAN F931A107MNMBMA	B	23.6/21.7
C5101	4030011600	S.CER C1608 JB 1E 104K-T	T	56.7/76.6
C5102	4030011600	S.CER C1608 JB 1E 104K-T	T	54.7/77.4
C5103	4030011600	S.CER C1608 JB 1E 104K-T	T	52.1/77.4
C5104	4030011600	S.CER C1608 JB 1E 104K-T	T	50.5/77.4
C5105	4030011600	S.CER C1608 JB 1E 104K-T	T	48.2/77.4
C5106	4030011600	S.CER C1608 JB 1E 104K-T	T	43.3/77.4
C5107	4030011600	S.CER C1608 JB 1E 104K-T	T	45.8/76.6
C5108	4030011600	S.CER C1608 JB 1E 104K-T	T	41.5/75.7
C5109	4030019500	S.CER GRM21BB31A106KE18 (GRM40 B)	T	41.7/78
C5110	4030019500	S.CER GRM21BB31A106KE18 (GRM40 B)	T	45.8/78.3
C5111	4550007470	S.TAN F931A107MNMBMA	B	32.5/72.3
C5113	4030011600	S.CER C1608 JB 1E 104K-T	T	65.2/68.1
C5114	4030011600	S.CER C1608 JB 1E 104K-T	T	65.2/65.6
C5115	4030011600	S.CER C1608 JB 1E 104K-T	T	65.2/63.2
C5116	4030011600	S.CER C1608 JB 1E 104K-T	T	65.2/62
C5117	4030011600	S.CER C1608 JB 1E 104K-T	T	65.2/60.5
C5118	4030011600	S.CER C1608 JB 1E 104K-T	T	36.3/69.4
C5119	4030011600	S.CER C1608 JB 1E 104K-T	T	36.3/68.2
C5120	4030011600	S.CER C1608 JB 1E 104K-T	T	36.3/65.1
C5121	4030011600	S.CER C1608 JB 1E 104K-T	T	36.3/63.7
C5122	4030011600	S.CER C1608 JB 1E 104K-T	T	36.3/61.7
C5123	4030011600	S.CER C1608 JB 1E 104K-T	T	64.8/55.3
C5124	4030011600	S.CER C1608 JB 1E 104K-T	T	36.3/60.2
C5125	4030011600	S.CER C1608 JB 1E 104K-T	T	36.3/57.7
C5126	4030011600	S.CER C1608 JB 1E 104K-T	T	36.3/56.4
C5127	4030011600	S.CER C1608 JB 1E 104K-T	T	57.2/48.5
C5128	4030011600	S.CER C1608 JB 1E 104K-T	T	55.8/48.5
C5129	4030011600	S.CER C1608 JB 1E 104K-T	T	51.6/48.5
C5130	4030011600	S.CER C1608 JB 1E 104K-T	T	50.2/48.5
C5131	4030011600	S.CER C1608 JB 1E 104K-T	T	48/48.5

M.=Mounted side (T: Mounted on the Top side, B: Mounted on the Bottom side)
S.=Surface mount

[MAIN UNIT]

REF NO.	PARTS NO.	DESCRIPTION	M.	H/V LOCATION

M.=Mounted side (T: Mounted on the Top side, B: Mounted on the Bottom side)

[MAIN UNIT]

REF NO.	PARTS NO.	DESCRIPTION	M.	H/V LOCATION
EP1608	6910015970	S.BEA MMZ1608B 301CT-AS	T	3.7/126
EP1609	6910012350	S.BEA MMZ1608Y 102BT	T	12.5/125.3
EP1610	6910012350	S.BEA MMZ1608Y 102BT	T	12.5/124
EP1611	6910012350	S.BEA MMZ1608Y 102BT	T	15.2/122.9
EP1612	6910014690	S.BEA MPZ1608S221A-T	T	12.5/121
EP1613	6910014690	S.BEA MPZ1608S221A-T	T	12.5/119.3
EP1614	6910014690	S.BEA MPZ1608S221A-T	T	12.5/118
EP1615	6910014690	S.BEA MPZ1608S221A-T	T	3.7/116
EP1616	6910014690	S.BEA MPZ1608S221A-T	T	3.7/114.8
EP1617	6910014640	S.BEA MPZ2012S221A-T	T	4/110.5
EP1618	6910014690	S.BEA MPZ1608S221A-T	T	3.7/124.7
EP1701	6910014690	S.BEA MPZ1608S221A-T	T	130/139.9
EP1702	6910012350	S.BEA MMZ1608Y 102BT	T	128.7/139.9
EP1703	6910012350	S.BEA MMZ1608Y 102BT	T	127.4/139.9
EP1704	6910014690	S.BEA MPZ1608S221A-T	T	126.1/139.9
EP1705	6910012350	S.BEA MMZ1608Y 102BT	T	124.8/139.9
EP1706	6910012350	S.BEA MMZ1608Y 102BT	T	122.4/139.9
EP1707	6910014690	S.BEA MPZ1608S221A-T	T	121.1/139.9
EP1708	6910014690	S.BEA MPZ1608S221A-T	T	119.8/139.9
EP1709	6910014690	S.BEA MPZ1608S221A-T	T	118.5/139.9
EP1710	6910014640	S.BEA MPZ2012S221A-T	T	115.8/139.9
EP1801	6910014690	S.BEA MPZ1608S221A-T	T	41.7/142.5
EP1802	6910014690	S.BEA MPZ1608S221A-T	T	43/142.5
EP1803	6910014690	S.BEA MPZ1608S221A-T	T	44.3/142.5
EP1804	6910014690	S.BEA MPZ1608S221A-T	T	47/142.5
EP1805	6910014690	S.BEA MPZ1608S221A-T	T	48.3/142.5
EP1901	6910018930	S.BEA MPZ2012S601A	T	154.6/143
EP1902	6910018930	S.BEA MPZ2012S601A	T	158.2/143.1
EP2001	6910014690	S.BEA MPZ1608S221A-T	T	178.8/121.5
EP2002	6910014690	S.BEA MPZ1608S221A-T	T	178.8/124.1
EP2003	6910014690	S.BEA MPZ1608S221A-T	T	174.5/112.8
EP2004	6910014690	S.BEA MPZ1608S221A-T	T	178.8/120.2
EP2031	6910014690	S.BEA MPZ1608S221A-T	T	181.8/144.8
EP2101	6910012350	S.BEA MMZ1608Y 102BT	B	192.2/62.7
EP2102	6910012350	S.BEA MMZ1608Y 102BT	B	183.7/62.7
EP2103	6910012350	S.BEA MMZ1608Y 102BT	T	175.3/30.3
EP2104	6910012350	S.BEA MMZ1608Y 102BT	T	172.7/26.3
EP2121	6910012350	S.BEA MMZ1608Y 102BT	T	173.8/36.1
EP2131	6910012350	S.BEA MMZ1608Y 102BT	T	158/58.7
EP2132	6910012350	S.BEA MMZ1608Y 102BT	T	158/60.4
EP2201	6910012350	S.BEA MMZ1608Y 102BT	T	195.2/37
EP2301	6910014730	S.BEA MPZ2012S331A-T	B	188.7/11.5
EP2302	6910014730	S.BEA MPZ2012S331A-T	B	183/19.2
EP2303	6910014730	S.BEA MPZ2012S331A-T	B	186.4/17
EP2304	6910014730	S.BEA MPZ2012S331A-T	B	196.1/20
EP2401	6910015970	S.BEA MMZ1608B 301CT-AS	B	193.5/79.5
EP2402	6910015970	S.BEA MMZ1608B 301CT-AS	B	197.2/79.6
EP3001	6910012350	S.BEA MMZ1608Y 102BT	B	136.9/38.8
EP3601	6910012350	S.BEA MMZ1608Y 102BT	B	135.5/27.8
EP3602	6910012350	S.BEA MMZ1608Y 102BT	B	132.5/25.6
EP3715	6910015970	S.BEA MMZ1608B 301CT-AS	T	140.1/99
EP4101	6910014730	S.BEA MPZ2012S331A-T	B	2.3/79.1
EP5001	6910014690	S.BEA MPZ1608S221A-T	T	29.5/36.8
EP5101	6910014690	S.BEA MPZ1608S221A-T	T	38.9/76.6
EP6001	6910015970	S.BEA MMZ1608B 301CT-AS	T	146.8/110.7

[PLL UNIT]

REF NO.	PARTS NO.	DESCRIPTION	M.	H/V LOCATION
IC1	1180000421	S.IC TA78L05F(TE12R,F)	B	94.4/59.7
IC2	1130009691	S.IC TC74HCT7007AF(F) S	T	133.6/64.3
IC3	1130011530	S.IC CD74HC4094M96	T	122.4/64.6
IC4	1130011530	S.IC CD74HC4094M96	T	133/75.2
IC101	1190002101	S.IC AD9951YSVZ <FE>	T	110.6/100.7
IC102	1130010560	S.IC SN74AHC244PWR	T	126.1/95.9
IC103	1180003190	S.REG UPD120N33TA-E1-A	T	115.7/86.4
IC104	1180003200	S.REG UPD120N18TA-E1-A	T	115.8/91.4
IC192	1130013010	S.IC SN74AHC1G08DCK3	T	77.6/36.8
IC320	1110007400	S.IC BGA616	T	43.3/67.2
IC381	1130013270	S.IC ADF4116BRUZ <FE>	T	70/70.3
IC401	1130013010	S.IC SN74AHC1G08DCK3	T	114/3.1
IC402	1130003831	S.IC TC7S04F(TE85R,F)	T	90.5/9.5
IC403	1140007881	S.IC TC190G08EFG0046JDZ/SC1246A	T	104.1/13.6
IC405	1130013010	S.IC SN74AHC1G08DCK3	T	75.2/53.2
IC620	1110007400	S.IC BGA616	T	38.4/47.5
IC681	1130013270	S.IC ADF4116BRUZ <FE>	T	29.3/39.8
IC701	1140014960	S.IC TC190G02EFG-0058/SC1287A	T	130.6/15.3
Q1	1590003680	S.TRA KRC402 RTK/P	T	138.4/75.4
Q51	1530003890	S.TRA KTC3880S Y-RTK/P	T	101.5/41.6
Q61	1530004011	S.TRA KTC3770U-C-RTK/P	T	109.9/41.5
Q71	1530003890	S.TRA KTC3880S Y-RTK/P	T	109.5/51.1
Q87	1530003890	S.TRA KTC3880S Y-RTK/P	T	133.1/87.2
Q121	1590003770	S.TRA KRA302E-RTK/P	T	85.8/93.8
Q122	1590003680	S.TRA KRC402 RTK/P	B	87.2/92.2
Q123	1590003770	S.TRA KRA302E-RTK/P	T	85.2/96.3
Q124	1590003680	S.TRA KRC402 RTK/P	B	87.6/95.2
Q125	1590003770	S.TRA KRA302E-RTK/P	T	85.8/91.1
Q126	1590003680	S.TRA KRC402 RTK/P	B	86.9/89.2
Q127	1590003770	S.TRA KRA302E-RTK/P	T	86/99
Q128	1590003680	S.TRA KRC402 RTK/P	B	87.9/98.2
Q151	1530003900	S.TRA KTC4075 BL-RTK/P	T	82.7/70.2
Q152	1530003340	S.TRA 2SC3357-T1 RF	B	117.3/106.5
Q181	1530003900	S.TRA KTC4075 BL-RTK/P	T	53.9/78.1
Q201	1560000491	S.FET 2SK508-T2B-A K52	T	74.1/96.5
Q202	1530003960	S.TRA KTC2875-B-RTK/P	T	73.6/102.5
Q221	1560000491	S.FET 2SK508-T2B-A K52	T	57.2/96.5
Q222	1530003960	S.TRA KTC2875-B-RTK/P	T	56.8/102.5
Q251	1560000491	S.FET 2SK508-T2B-A K52	T	40.1/96.5
Q252	1530003960	S.TRA KTC2875-B-RTK/P	T	40/102.5
Q271	1560000491	S.FET 2SK508-T2B-A K52	T	23.1/96.5
Q272	1530003960	S.TRA KTC2875-B-RTK/P	T	23.1/102.5
Q301	1530004011	S.TRA KTC3770U-C-RTK/P	T	33.2/76
Q361	1590003680	S.TRA KRC402 RTK/P	B	20.9/77.3
Q402	1530003900	S.TRA KTC4075 BL-RTK/P	T	93.2/20.9
Q403	1530003900	S.TRA KTC4075 BL-RTK/P	T	115.6/12.5
Q404	1590003770	S.TRA KRA302E-RTK/P	T	94.1/4.8
Q421	1590003770	S.TRA KRA302E-RTK/P	T	81.3/9.9
Q422	1590003680	S.TRA KRC402 RTK/P	T	83.1/12.4
Q423	1590003770	S.TRA KRA302E-RTK/P	T	81.3/7.4
Q424	1590003680	S.TRA KRC402 RTK/P	T	82.7/5
Q425	1590003770	S.TRA KRA302E-RTK/P	T	81.7/14.3
Q426	1590003680	S.TRA KRC402 RTK/P	T	83.1/16.6
Q427	1590003770	S.TRA KRA302E-RTK/P	T	81.3/18.6
Q428	1590003680	S.TRA KRC402 RTK/P	T	83.1/20.8
Q451	1560000331	S.FET 2SK210-GR(TE85R,F)	T	61/44
Q452	1530003900	S.TRA KTC4075 BL-RTK/P	T	61.9/34.8
Q481	1530003900	S.TRA KTC4075 BL-RTK/P	T	22.8/34.1
Q501	1560000491	S.FET 2SK508-T2B-A K52	T	30.8/13.4
Q502	1530003960	S.TRA KTC2875-B-RTK/P	T	31.2/7.5
Q521	1560000491	S.FET 2SK508-T2B-A K52	T	14/13.5
Q522	1530003960	S.TRA KTC2875-B-RTK/P	T	14.3/7.5
Q551	1560000491	S.FET 2SK508-T2B-A K52	T	47.6/13.4
Q552	1530003960	S.TRA KTC2875-B-RTK/P	T	47.9/7.5
Q571	1560000491	S.FET 2SK508-T2B-A K52	T	64.5/13.5
Q572	1530003960	S.TRA KTC2875-B-RTK/P	T	64.7/7.5
Q601	1530004011	S.TRA KTC3770U-C-RTK/P	T	41/37
Q661	1590003680	S.TRA KRC402 RTK/P	B	5.1/27.9
Q681	1590003770	S.TRA KRA302E-RTK/P	T	67.8/51.5
Q701	1530003900	S.TRA KTC4075 BL-RTK/P	B	123.9/12.4
Q702	1530003900	S.TRA KTC4075 BL-RTK/P	T	141.9/19.2
Q801	1530003890	S.TRA KTC3880S Y-RTK/P	T	127.9/46.7
Q831	1560000561	S.FET 2SK882-GR(TE85L,F)	T	149.4/37.4
Q851	1590003680	S.TRA KRC402 RTK/P	T	138/52.1
Q852	1590003770	S.TRA KRA302E-RTK/P	T	137.8/49.8
Q853	1590003680	S.TRA KRC402 RTK/P	B	109.5/55.3
Q854	1590003770	S.TRA KRA302E-RTK/P	T	106.6/54.7
Q1502	1590003680	S.TRA KRC402 RTK/P	T	73/63.6
Q1521	1590003680	S.TRA KRC402 RTK/P	B	21.5/62.4
Q1522	1590003770	S.TRA KRA302E-RTK/P	T	21.2/64.1
Q2501	1590003680	S.TRA KRC402 RTK/P	T	85.1/50.4
Q2511	1590003680	S.TRA KRC402 RTK/P	B	7.2/47.5
Q2512	1590003770	S.TRA KRA302E-RTK/P	T	5.6/45.5
D81	1750000581	S.DIO 1SV307(TPH3,F)	B	97/49.7
D201	1720000831	S.VAR KV1770STL-G	T	74.5/88.8
D202	1720000831	S.VAR KV1770STL-G	B	74.3/88.7
D221	1720000831	S.VAR KV1770STL-G	T	57.5/88.7
D222	1720000831	S.VAR KV1770STL-G	B	57.5/88.7
D251	1750001720	S.VAR 1SV215(TPH3,F)	T	39.1/87.9
D252	1750001720	S.VAR 1SV215(TPH3,F)	T	41.4/87.9
D253	1750001720	S.VAR 1SV215(TPH3,F)	B	41.4/88
D254	1750001720	S.VAR 1SV215(TPH3,F)	B	39.1/87.9
D271	1750001720	S.VAR 1SV215(TPH3,F)	T	22.3/87.2
D272	1750001720	S.VAR 1SV215(TPH3,F)	T	24.6/87.1
D273	1750001720	S.VAR 1SV215(TPH3,F)	B	24.5/87.9
D274	1750001720	S.VAR 1SV215(TPH3,F)	B	22.3/88
D361	1750000581	S.DIO 1SV307(TPH3,F)	T	22.7/75.5
D362	1750000581	S.DIO 1SV307(TPH3,F)	T	26.1/75.4
D401	1750001320	S.DIO KDS4148U RTK/P	B	88.9/6.7
D451	1720000681	S.VAR 1SV262(TPH2,F)	T	64.7/33.5

M.=Mounted side (T: Mounted on the Top side, B: Mounted on the Bottom side)
S.=Surface mount

[PLL UNIT]

REF NO.	PARTS NO.	DESCRIPTION		M.	H/V LOCATION
D452	1790000491	S.DIO	HSM88ASTR-E	T	67/46.2
D453	1790000491	S.DIO	HSM88ASTR-E	T	67.1/43
D501	1720000831	S.VAR	KV1770STL-G	T	30.2/21.3
D502	1720000831	S.VAR	KV1770STL-G	B	30.3/21.2
D521	1720000831	S.VAR	KV1770STL-G	T	13.5/21.2
D522	1720000831	S.VAR	KV1770STL-G	B	13.5/21.2
D551	1750001720	S.VAR	1SV215(TPH3,F)	T	48.7/22
D552	1750001720	S.VAR	1SV215(TPH3,F)	T	46.4/22
D553	1750001720	S.VAR	1SV215(TPH3,F)	B	46.5/22
D554	1750001720	S.VAR	1SV215(TPH3,F)	B	48.7/22
D571	1750001720	S.VAR	1SV215(TPH3,F)	T	65.5/22
D572	1750001720	S.VAR	1SV215(TPH3,F)	T	63.2/22
D573	1750001720	S.VAR	1SV215(TPH3,F)	B	63.3/22
D574	1750001720	S.VAR	1SV215(TPH3,F)	B	65.5/22
D661	1750000581	S.DIO	1SV307(TPH3,F)	T	6.6/27.3
D662	1750000581	S.DIO	1SV307(TPH3,F)	T	6.7/29.9
D680	1750001320	S.DIO	KDS4148U RTK/P	B	43.8/47.6
D681	1750001320	S.DIO	KDS4148U RTK/P	T	69.8/52.2
D821	1750000431	S.DIO	HSB88WSTR-E	T	132.7/32.5
D1201	1750001310	S.DIO	KDS114 RTK/PA	T	36.4/64.1
D1221	1750001310	S.DIO	KDS114 RTK/PA	B	22.5/70
D2201	1750001310	S.DIO	KDS114 RTK/PA	T	19.5/46.8
D2221	1750001310	S.DIO	KDS114 RTK/PA	T	8.5/39
FI101	2020001820	S.CER	SFECV10M5FA00-R0 (SFECV10.5MA5S)	T	96.1/89
FI401	2020001820	S.CER	SFECV10M5FA00-R0 (SFECV10.5MA5S)	T	92.9/28.8
FI831	2030000300	S.MON	DSF753SBF 64.491 MHz (FL-356)	T	149.7/42.6
X51	6050012560	S.XTA	CR-770B DSA321SD 32 MHz	T	97.9/41.6
L51	6200005011	S.COI	NLV25T-100J	T	96.8/44.9
L52	6200005011	S.COI	NLV25T-100J	T	103.4/44.4
L53	6200009351	S.COI	ELJRE R22GFA	T	105.8/41.9
L61	6150004831	S.COI	LS-509-LF	T	119.3/40.8
L62	6150004831	S.COI	LS-509-LF	T	119.3/48.3
L72	6200009181	S.COI	ELJRE R10JFA	T	103/52
L73	6200009531	S.COI	ELJRE R15GFA	T	101.2/54.1
L75	6200009531	S.COI	ELJRE R15GFA	T	98.6/55.2
L86	6200002861	S.COI	NLV25T-4R7J	T	102.9/49.6
L87	6200009181	S.COI	ELJRE R10JFA	T	135.4/87.2
L88	6200009531	S.COI	ELJRE R15GFA	T	138.8/86.5
L89	6200009531	S.COI	ELJRE R15GFA	T	142.3/89.8
L101	6200005011	S.COI	NLV25T-100J	B	113.9/86.4
L103	6140002810	S.COI	LR-317	T	98.2/100.8
L104	6200005011	S.COI	NLV25T-100J	B	109/94.8
L105	6200005011	S.COI	NLV25T-100J	B	111.8/94.8
L106	6200006671	S.COI	ELJRE 68NGFA	B	105.8/98.2
L121	6200005011	S.COI	NLV25T-100J	B	84.1/97.1
L122	6200005011	S.COI	NLV25T-100J	B	82.2/90.2
L123	6200005011	S.COI	NLV25T-100J	T	82.4/95.7
L125	6200005011	S.COI	NLV25T-100J	T	82.4/90.9
L127	6200004951	S.COI	NLV25T-1R8J	T	99.8/90.6
L128	6200005011	S.COI	NLV25T-100J	T	85.4/88.4
L151	6200002651	S.COI	NLV25T-R18J	B	112.8/105.9
L155	6200002851	S.COI	NLV25T-R82J	T	98.2/94
L156	6200002851	S.COI	NLV25T-R82J	T	100.9/93.4
L161	6200001981	S.COI	NLV25T-1R0J	T	90.1/76.3
L162	6200001981	S.COI	NLV25T-1R0J	T	81.8/66.4
L181	6200005011	S.COI	NLV25T-100J	T	52.7/75.5
L202	6190001411	COI	#E526GN-110501		
L204	6200002041	S.COI	NLV25T-101J	B	74.1/92.4
L205	6200010440	S.COI	C2520C-1R2G-A (1.2U)	T	63.9/91.5
L206	6200010440	S.COI	C2520C-1R2G-A (1.2U)	T	67.8/86.8
L222	6190001411	COI	#E526GN-110501		
L224	6200002041	S.COI	NLV25T-101J	B	57.3/92.4
L225	6200010440	S.COI	C2520C-1R2G-A (1.2U)	T	46.9/91.5
L226	6200010440	S.COI	C2520C-1R2G-A (1.2U)	T	51/86.8
L252	6190001421	COI	#E526GN-110502		
L254	6200002041	S.COI	NLV25T-101J	B	39.6/92.4
L255	6200010440	S.COI	C2520C-1R2G-A (1.2U)	T	29.9/91.5
L256	6200010440	S.COI	C2520C-1R2G-A (1.2U)	T	34.4/86.8
L272	6190001441	COI	#E526GN-110504		
L274	6200002041	S.COI	NLV25T-101J	B	22.8/92.4
L275	6200010440	S.COI	C2520C-1R2G-A (1.2U)	T	13.4/91.5
L276	6200010440	S.COI	C2520C-1R2G-A (1.2U)	T	16/86.8
L301	6200005011	S.COI	NLV25T-100J	T	33.9/72.7
L304	6200002861	S.COI	NLV25T-4R7J	T	33.9/70.2
L320	6200009101	S.COI	ELJRE R18GFA	T	40.3/74.2
L321	6200002841	S.COI	NLV25T-R22J	T	42.3/64.1
L328	6200006991	S.COI	ELJRE 56NGFA	T	42.3/77.3
L329	6200006991	S.COI	ELJRE 56NGFA	T	43.9/75.4
L401	6200005011	S.COI	NLV25T-100J	T	88.3/13.9
L421	6200005011	S.COI	NLV25T-100J	B	84.5/10.9
L422	6200005011	S.COI	NLV25T-100J	B	83.8/7.6
L423	6200005011	S.COI	NLV25T-100J	B	81.7/1.9
L425	6200005011	S.COI	NLV25T-100J	B	83.1/4.6
L428	6200005011	S.COI	NLV25T-100J	T	81.6/23.7
L452	6130002970	COI	LB-343		
L453	6200005011	S.COI	NLV25T-100J	T	56.8/40.6
L454	6200009861	S.COI	NLV25T-1R5J	T	57.8/34.4
L455	6200005011	S.COI	NLV25T-100J	T	54/39.6
L481	6200005011	S.COI	NLV25T-100J	B	21.7/37.1
L502	6190001411	COI	#E526GN-110501		
L504	6200002041	S.COI	NLV25T-101J	B	29.7/17.5
L505	6200010440	S.COI	C2520C-1R2G-A (1.2U)	T	40.7/18.4
L506	6200010440	S.COI	C2520C-1R2G-A (1.2U)	T	36.6/23.1
L522	6190001411	COI	#E526GN-110501		
L524	6200002041	S.COI	NLV25T-101J	B	14.1/17.5
L525	6200010440	S.COI	C2520C-1R2G-A (1.2U)	T	24.1/18.4

[PLL UNIT]

REF NO.	PARTS NO.	DESCRIPTION		M.	H/V LOCATION
L526	6200010440	S.COI	C2520C-1R2G-A (1.2U)	T	19.7/23.1
L552	6190001421	COI	#E526GN-110502		
L554	6200002041	S.COI	NLV25T-101J	B	47/17.6
L555	6200010440	S.COI	C2520C-1R2G-A (1.2U)	T	57.9/18.4
L556	6200010440	S.COI	C2520C-1R2G-A (1.2U)	T	53.3/23.1
L572	6190001441	COI	#E526GN-110504		
L574	6200002041	S.COI	NLV25T-101J	B	63.8/17.6
L575	6200010440	S.COI	C2520C-1R2G-A (1.2U)	T	73.9/18.4
L576	6200010440	S.COI	C2520C-1R2G-A (1.2U)	T	72/23.1
L601	6200005011	S.COI	NLV25T-100J	T	39.8/34
L604	6200002861	S.COI	NLV25T-4R7J	B	43.7/40.5
L620	6200009101	S.COI	ELJRE R18GFA	T	44.1/41.6
L621	6200002841	S.COI	NLV25T-R22J	T	33.3/47.7
L628	6200006991	S.COI	ELJRE 56NGFA	T	41.1/44.1
L629	6200006991	S.COI	ELJRE 56NGFA	T	41.1/45.3
L701	6200005011	S.COI	NLV25T-100J	T	124.1/24.8
L702	6200005491	S.COI	NLV32T-331J	T	137.5/6.4
L703	6200005491	S.COI	NLV32T-331J	T	141.2/6
L704	6200008641	S.COI	NLV32T-391J	T	144.8/3
L721	6200002041	S.COI	NLV25T-101J	T	141/12.4
L821	6140002810	S.COI	LR-317	T	127/32.5
L822	6140002810	S.COI	LR-317	T	138.4/32.5
L831	6140003770	S.COI	LR-414 4KBL (STP-01435)	T	139.5/40.5
L834	6150004280	COI	LS-484B (C-14927)		
L851	6200005011	S.COI	NLV25T-100J	T	135.2/50.8
L852	6200005011	S.COI	NLV25T-100J	B	106.8/57.2
L1201	6200002601	S.COI	NLV25T-047J	T	33.6/65.5
L1221	6200002431	S.COI	NLV25T-082J	T	27.9/65.5
L1222	6200002431	S.COI	NLV25T-082J	T	27.2/68.9
L1223	6200002641	S.COI	NLV25T-R15J	T	21/70.1
L1224	6200002411	S.COI	NLV25T-056J	T	30.8/64.4
L1225	6200005011	S.COI	NLV25T-100J	B	25.1/66.3
L1301	6200005011	S.COI	NLV25T-100J	T	75.6/72.4
L1521	6200005011	S.COI	NLV25T-100J	B	27.2/63.7
L2201	6200002601	S.COI	NLV25T-047J	T	19.5/44.4
L2202	6200005011	S.COI	NLV25T-100J	B	28.3/48.9
L2221	6200002431	S.COI	NLV25T-082J	T	12.4/43.7
L2222	6200002431	S.COI	NLV25T-082J	T	11.2/39.4
L2223	6200002641	S.COI	NLV25T-R15J	T	5.1/34.6
L2224	6200002411	S.COI	NLV25T-056J	T	13.4/46.6
L2225	6200005011	S.COI	NLV25T-100J	T	6/43.2
L2511	6200005011	S.COI	NLV25T-100J	B	11.8/48.8
L4301	6200005011	S.COI	NLV25T-100J	B	35.1/46.1
R1	7030003360	S.RES	ERJ3GEYJ 221 V (220)	B	149.3/61.5
R2	7030003360	S.RES	ERJ3GEYJ 221 V (220)	B	142.5/61.8
R3	7030003360	S.RES	ERJ3GEYJ 221 V (220)	B	141.8/74.5
R4	7030003360	S.RES	ERJ3GEYJ 221 V (220)	B	149.3/75.5
R6	7030003360	S.RES	ERJ3GEYJ 221 V (220)	B	149.3/77.5
R7	7030003360	S.RES	ERJ3GEYJ 221 V (220)	B	141.8/78.5
R8	7030003360	S.RES	ERJ3GEYJ 221 V (220)	B	149.3/79.5
R9	7030011030	S.RES	ERJ1TYJ 270U (27)	B	104.4/60.7
R10	7030003200	S.RES	ERJ3GEYJ 100 V (10)	T	127.8/72
R11	7030003200	S.RES	ERJ3GEYJ 100 V (10)	T	127.8/75.6
R12	7030003200	S.RES	ERJ3GEYJ 100 V (10)	T	127.8/74.4
R13	7030003200	S.RES	ERJ3GEYJ 100 V (10)	T	127.8/73.2
R14	7030003200	S.RES	ERJ3GEYJ 100 V (10)	B	131.4/77.1
R16	7030003550	S.RES	ERJ3GEYJ 822 V (8.2K)	T	127.4/63.4
R18	7030003550	S.RES	ERJ3GEYJ 822 V (8.2K)	T	127.4/64.7
R19	7030003550	S.RES	ERJ3GEYJ 822 V (8.2K)	T	127.4/66.4
R20	7030003550	S.RES	ERJ3GEYJ 822 V (8.2K)	T	118/60.7
R21	7030003550	S.RES	ERJ3GEYJ 822 V (8.2K)	T	116.6/61.4
R22	7030003550	S.RES	ERJ3GEYJ 822 V (8.2K)	B	122.5/62.4
R23	7030003550	S.RES	ERJ3GEYJ 822 V (8.2K)	T	126.6/68.4
R24	7030003560	S.RES	ERJ3GEYJ 103 V (10K)	T	137.5/78.9
R25	7030003860	S.RES	ERJ3GE JPW V	T	117.4/65.5
R26	7030003860	S.RES	ERJ3GE JPW V	T	116.1/65.5
R51	7030003580	S.RES	ERJ3GEYJ 153 V (15K)	T	93.1/43.6
R52	7030003590	S.RES	ERJ3GEYJ 183 V (18K)	T	93.1/40.8
R53	7030003690	S.RES	ERJ3GEYJ 124 V (120K)	T	94.4/43.6
R54	7030003590	S.RES	ERJ3GEYJ 183 V (18K)	T	100.7/44
R55	7030003610	S.RES	ERJ3GEYJ 273 V (27K)	T	101.1/38.5
R56	7030003320	S.RES	ERJ3GEYJ 101 V (100)	T	103.5/38.5
R57	7030003860	S.RES	ERJ3GE JPW V	T	103.8/41.3
R58	7030003860	S.RES	ERJ3GE JPW V	T	107.1/38.5
R61	7030003260	S.RES	ERJ3GEYJ 330 V (33)	T	106.5/44.1
R62	7030003600	S.RES	ERJ3GEYJ 223 V (22K)	T	107.8/44.1
R63	7030003560	S.RES	ERJ3GEYJ 103 V (10K)	T	109.7/43.4
R64	7030003370	S.RES	ERJ3GEYJ 271 V (270)	T	109.9/38.1
R65	7030003860	S.RES	ERJ3GE JPW V	B	123.5/48.6
R66	7030003320	S.RES	ERJ3GEYJ 101 V (100)	T	115.8/52.5
R71	7030003510	S.RES	ERJ3GEYJ 392 V (3.9K)	T	108.5/48.8
R72	7030003520	S.RES	ERJ3GEYJ 472 V (4.7K)	T	111.6/50.9
R73	7030003200	S.RES	ERJ3GEYJ 100 V (10)	B	106/52
R74	7030003360	S.RES	ERJ3GEYJ 221 V (220)	T	111.2/53.5
R85	7030003380	S.RES	ERJ3GEYJ 331 V (330)	T	99.9/50.7
R86	7030003400	S.RES	ERJ3GEYJ 471 V (470)	T	127/85.3
R87	7030003200	S.RES	ERJ3GEYJ 100 V (10)	T	130.8/89.3
R88	7030003520	S.RES	ERJ3GEYJ 472 V (4.7K)	T	129.4/87.2
R89	7030003510	S.RES	ERJ3GEYJ 392 V (3.9K)	T	130.7/87.2
R90	7030003360	S.RES	ERJ3GEYJ 221 V (220)	T	135.4/89.8
R91	7030008240	S.RES	ERJ12Y0R00U	B	84.1/45.2
R92	7030008240	S.RES	ERJ12Y0R00U	B	152.8/97.2
R93	7030003430	S.RES	ERJ3GEYJ 821 V (820)	B	97.6/51.4
R94	7030004030	S.RES	ERJ3GEYJ 5R6 V (5.6)	B	96.9/53.7
R95	7030003430	S.RES	ERJ3GEYJ 821 V (820)	B	97.6/55.9
R96	7030003370	S.RES	ERJ3GEYJ 271 V (270)	B	146.5/86.5
R97	7030003230	S.RES	ERJ3GEYJ 180 V (18)	B	149.1/89.1
R98	7030003370	S.RES	ERJ3GEYJ 271 V (270)	B	149.8/86.5
R101	7030003860	S.RES	ERJ3GE JPW V	T	117.9/107.4
R108	7030003440	S.RES	ERJ3GEYJ 102 V (1K)	T	115.2/105.4
R109	7030003440	S.RES	ERJ3GEYJ 102 V (1K)	T	117.3/99.8
R110	7030003440	S.RES	ERJ3GEYJ 102 V (1K)	T	117.3/98.6

M.=Mounted side (T: Mounted on the Top side, B: Mounted on the Bottom side)
S.=Surface mount

[PLL UNIT]

REF NO.	PARTS NO.	DESCRIPTION	M.	H/V LOCATION
R111	7030003440	S.RES ERJ3GEYJ 102 V (1K)	T	117.3/97.4
R112	7030003440	S.RES ERJ3GEYJ 102 V (1K)	T	115.3/94.6
R113	7030003510	S.RES ERJ3GEYJ 392 V (3.9K)	T	104.8/96.9
R114	7030003320	S.RES ERJ3GEYJ 101 V (100)	B	101.5/99.9
R115	7030003320	S.RES ERJ3GEYJ 101 V (100)	B	103.1/100.7
R116	7030003440	S.RES ERJ3GEYJ 102 V (1K)	T	105.9/108
R131	7030003320	S.RES ERJ3GEYJ 101 V (100)	T	93.1/76.3
R133	7030003350	S.RES ERJ3GEYJ 181 V (180)	T	93.9/78.2
R152	7030003400	S.RES ERJ3GEYJ 471 V (470)	T	124.6/105.3
R154	7030003320	S.RES ERJ3GEYJ 101 V (100)	B	115/101
R155	7030003480	S.RES ERJ3GEYJ 222 V (2.2K)	B	125/104.4
R157	7030003360	S.RES ERJ3GEYJ 221 V (220)	B	121.7/103.5
R158	7030003560	S.RES ERJ3GEYJ 103 V (10K)	B	120.7/107.2
R159	7030003200	S.RES ERJ3GEYJ 100 V (10)	T	85.5/67.3
R160	7030003370	S.RES ERJ3GEYJ 271 V (270)	T	84.7/69.4
R161	7030003640	S.RES ERJ3GEYJ 473 V (47K)	T	82.7/72.1
R181	7030003440	S.RES ERJ3GEYJ 102 V (1K)	T	55.8/78
R182	7030003530	S.RES ERJ3GEYJ 562 V (5.6K)	T	53.8/80.1
R191	7030003320	S.RES ERJ3GEYJ 101 V (100)	T	75.7/39.8
R192	7030003480	S.RES ERJ3GEYJ 222 V (2.2K)	T	77.6/39
R193	7030003440	S.RES ERJ3GEYJ 102 V (1K)	T	78.2/34.6
R202	7030003860	S.RES ERJ3GE JPW V	T	61.9/88.1
R203	7030006521	S.RES ERA3YED 561V (560)	T	73.7/104.9
R204	7030003560	S.RES ERJ3GEYJ 103 V (10K)	T	72.4/99.5
R222	7030009841	S.RES ERA3YHD 330V (33)	T	45/88.1
R223	7030009861	S.RES ERA3YED 471V (470)	T	56.9/104.9
R224	7030003560	S.RES ERJ3GEYJ 103 V (10K)	T	55.5/99.5
R252	7030009851	S.RES ERA3YED 271V (270)	T	28.3/88.1
R253	7030006521	S.RES ERA3YED 561V (560)	T	40.1/104.9
R254	7030003560	S.RES ERJ3GEYJ 103 V (10K)	T	38.8/99.5
R272	7030006521	S.RES ERA3YED 561V (560)	T	12.3/87.9
R273	7030006521	S.RES ERA3YED 561V (560)	T	23.3/104.9
R274	7030003560	S.RES ERJ3GEYJ 103 V (10K)	T	22/99.6
R275	7030003280	S.RES ERJ3GEYJ 470 V (47)	T	30.6/77.9
R281	7030008240	S.RES ERJ12Y0R00U	B	33.1/92.5
R282	7030008240	S.RES ERJ12Y0R00U	B	49.7/92.5
R283	7030008240	S.RES ERJ12Y0R00U	B	66.4/92.5
R284	7030008240	S.RES ERJ12Y0R00U	B	78.2/106.7
R301	7030003470	S.RES ERJ3GEYJ 182 V (1.8K)	T	33.2/77.9
R302	7030003480	S.RES ERJ3GEYJ 222 V (2.2K)	T	31.2/76.1
R303	7030003440	S.RES ERJ3GEYJ 102 V (1K)	T	38.8/74.2
R304	7030003260	S.RES ERJ3GEYJ 330 V (33)	T	31.7/71.5
R305	7030003860	S.RES ERJ3GE JPW V	T	45.1/74.2
R309	7030003410	S.RES ERJ3GEYJ 561 V (560)	T	63.4/67.5
R321	7030003860	S.RES ERJ3GE JPW V	T	45.1/71.5
R323	7030003200	S.RES ERJ3GEYJ 100 V (10)	T	40.4/63.6
R352	7030003410	S.RES ERJ3GEYJ 561 V (560)	T	14.2/78.3
R353	7030007860	S.RES ERJ3GEYJ 8R2V (8.2)	T	13.5/75.2
R354	7030003410	S.RES ERJ3GEYJ 561 V (560)	T	12.3/75.2
R361	7030003440	S.RES ERJ3GEYJ 102 V (1K)	B	25.6/73.2
R362	7030003320	S.RES ERJ3GEYJ 101 V (100)	B	21.7/74.2
R363	7030003560	S.RES ERJ3GEYJ 103 V (10K)	B	20/75
R380	7030003560	S.RES ERJ3GEYJ 103 V (10K)	T	71/66.2
R385	7030003440	S.RES ERJ3GEYJ 102 V (1K)	T	75.5/68.1
R386	7030003440	S.RES ERJ3GEYJ 102 V (1K)	T	75.6/69.3
R387	7030003360	S.RES ERJ3GEYJ 221 V (220)	T	75.5/70.5
R392	7030003860	S.RES ERJ3GE JPW V	T	68/74.5
R393	7030009961	S.RES ERA3YED 221V (220)	T	69.3/74.5
R394	7030007230	S.RES ERA3YED 102V (1K)	T	66/73.8
R401	7030007220	S.RES ERA3YED 202V (2K)	T	115.7/28.7
R402	7030007220	S.RES ERA3YED 202V (2K)	T	114.4/28.7
R403	7030007230	S.RES ERA3YED 102V (1K)	T	115.1/30.8
R404	7030007220	S.RES ERA3YED 202V (2K)	T	112.1/27.4
R405	7030007230	S.RES ERA3YED 102V (1K)	T	113/29.4
R406	7030007220	S.RES ERA3YED 202V (2K)	T	110.3/27.2
R407	7030007230	S.RES ERA3YED 102V (1K)	T	110.9/29.3
R408	7030007220	S.RES ERA3YED 202V (2K)	T	109/27.2
R409	7030007230	S.RES ERA3YED 102V (1K)	T	108.1/30.6
R410	7030007220	S.RES ERA3YED 202V (2K)	T	107.7/27.2
R411	7030007230	S.RES ERA3YED 102V (1K)	T	108.1/29.3
R412	7030007220	S.RES ERA3YED 202V (2K)	T	106.4/27.2
R413	7030007230	S.RES ERA3YED 102V (1K)	T	105.2/30.6
R414	7030007220	S.RES ERA3YED 202V (2K)	T	105.1/27.2
R415	7030007210	S.RES ERA3YEB 102V (1K)	T	105.2/29.3
R416	7030007200	S.RES ERA3YEB 202V (2K)	T	103.8/27.2
R417	7030007210	S.RES ERA3YEB 102V (1K)	T	102.3/30.6
R418	7030007200	S.RES ERA3YEB 202V (2K)	T	102.5/27.2
R419	7030007210	S.RES ERA3YEB 102V (1K)	T	102.3/29.3
R420	7030007200	S.RES ERA3YEB 202V (2K)	T	101.2/27.2
R421	7030007210	S.RES ERA3YEB 102V (1K)	T	99.4/30.6
R422	7030007200	S.RES ERA3YEB 202V (2K)	T	99.9/27.2
R423	7030007210	S.RES ERA3YEB 102V (1K)	T	99.4/29.3
R424	7030007200	S.RES ERA3YEB 202V (2K)	T	98.6/27.2
R425	7030009861	S.RES ERA3YED 471V (470)	T	97.3/27.2
R427	7030003800	S.RES ERJ3GEYJ 105 V (1M)	T	92.9/9.2
R428	7030003320	S.RES ERJ3GEYJ 101 V (100)	B	115.9/3.9
R430	7030003200	S.RES ERJ3GEYJ 100 V (10)	T	88.1/11.3
R431	7030003320	S.RES ERJ3GEYJ 101 V (100)	T	90/23.7
R432	7030003680	S.RES ERJ3GEYJ 104 V (100K)	T	95/23.9
R433	7030003360	S.RES ERJ3GEYJ 221 V (220)	T	92.1/16.4
R434	7030003240	S.RES ERJ3GEYJ 220 V (22)	T	89.4/16.4
R435	7030003330	S.RES ERJ3GEYJ 121 V (120)	T	97.1/2.8
R436	7030003220	S.RES ERJ3GEYJ 150 V (15)	T	94.5/2.8
R437	7030003680	S.RES ERJ3GEYJ 104 V (100K)	T	97.1/4.3
R438	7030003320	S.RES ERJ3GEYJ 101 V (100)	B	91.7/11
R439	7030003650	S.RES ERJ3GEYJ 563 V (56K)	T	115.6/10.6
R440	7030003370	S.RES ERJ3GEYJ 271 V (270)	T	115.7/8.2
R441	7030003320	S.RES ERJ3GEYJ 101 V (100)	T	90.4/21.6
R442	7030003440	S.RES ERJ3GEYJ 102 V (1K)	B	99.6/6.5
R443	7030003440	S.RES ERJ3GEYJ 102 V (1K)	B	116.3/20.5
R444	7030003440	S.RES ERJ3GEYJ 102 V (1K)	B	114.7/20.5
R445	7030003440	S.RES ERJ3GEYJ 102 V (1K)	T	115/20.8
R446	7030003360	S.RES ERJ3GEYJ 221 V (220)	T	116.2/20
R447	7030003440	S.RES ERJ3GEYJ 102 V (1K)	B	100.4/14.9

[PLL UNIT]

REF NO.	PARTS NO.	DESCRIPTION	M.	H/V LOCATION
R448	7030003860	S.RES ERJ3GE JPW V	T	115.7/9.4
R449	7030003440	S.RES ERJ3GEYJ 102 V (1K)	T	115.2/5.1
R450	7030003560	S.RES ERJ3GEYJ 103 V (10K)	T	66.9/33.2
R451	7030005871	S.RES ERA3YKD 104V (100K)	T	64/46.2
R452	7030005871	S.RES ERA3YKD 104V (100K)	T	56.1/43.7
R453	7030003340	S.RES ERJ3GEYJ 151 V (150)	T	56.5/38.7
R454	7030003320	S.RES ERJ3GEYJ 101 V (100)	T	58.7/46.3
R455	7030003350	S.RES ERJ3GEYJ 181 V (180)	T	61.3/46.2
R456	7030003650	S.RES ERJ3GEYJ 563 V (56K)	T	60.1/33.1
R457	7030003360	S.RES ERJ3GEYJ 221 V (220)	T	54.2/34.8
R459	7030003220	S.RES ERJ3GEYJ 150 V (15)	T	57.1/31.9
R460	7030003220	S.RES ERJ3GEYJ 150 V (15)	T	55.2/31.2
R461	7030003310	S.RES ERJ3GEYJ 820 V (82)	T	58.9/31.2
R462	7030003320	S.RES ERJ3GEYJ 101 V (100)	T	115.9/15.6
R463	7030003640	S.RES ERJ3GEYJ 473 V (47K)	T	72.6/51.3
R464	7030003640	S.RES ERJ3GEYJ 473 V (47K)	T	71.3/52
R471	7030003860	S.RES ERJ3GE JPW V	T	89.8/18.3
R481	7030003440	S.RES ERJ3GEYJ 102 V (1K)	T	20.9/34.2
R482	7030003530	S.RES ERJ3GEYJ 562 V (5.6K)	T	19.6/32.4
R502	7030006521	S.RES ERA3YED 561V (560)	T	42.9/21.9
R503	7030006521	S.RES ERA3YED 561V (560)	T	31.1/5.1
R504	7030003560	S.RES ERJ3GEYJ 103 V (10K)	T	32.2/10.5
R522	7030009841	S.RES ERA3YHD 330V (33)	T	26/21.9
R523	7030009861	S.RES ERA3YED 471V (470)	T	14.2/5.1
R524	7030003560	S.RES ERJ3GEYJ 103 V (10K)	T	15.3/10.4
R552	7030009851	S.RES ERA3YED 271V (270)	T	59.7/21.8
R553	7030006521	S.RES ERA3YED 561V (560)	T	47.8/5.1
R554	7030003560	S.RES ERJ3GEYJ 103 V (10K)	T	48.9/10.4
R572	7030006521	S.RES ERA3YED 561V (560)	T	75.5/21.8
R573	7030006521	S.RES ERA3YED 561V (560)	T	64.6/5.1
R574	7030003560	S.RES ERJ3GEYJ 103 V (10K)	T	65.7/10.4
R575	7030003280	S.RES ERJ3GEYJ 470 V (47)	B	35/35.4
R581	7030008240	S.RES ERJ12Y0R00U	B	21.8/17.6
R582	7030008240	S.RES ERJ12Y0R00U	B	37.8/17.6
R583	7030008240	S.RES ERJ12Y0R00U	B	54.8/17.6
R601	7030003470	S.RES ERJ3GEYJ 182 V (1.8K)	T	38.7/37.4
R602	7030003480	S.RES ERJ3GEYJ 222 V (2.2K)	T	44.1/36.5
R603	7030003440	S.RES ERJ3GEYJ 102 V (1K)	T	44.1/38.9
R604	7030003260	S.RES ERJ3GEYJ 330 V (33)	B	40.7/39.7
R609	7030003860	S.RES ERJ3GE JPW V	T	18.7/40.4
R621	7030003860	S.RES ERJ3GE JPW V	T	41.9/47.3
R623	7030003200	S.RES ERJ3GEYJ 100 V (10)	T	31.2/47.4
R624	7030003860	S.RES ERJ3GE JPW V	T	36.5/48.1
R652	7030003370	S.RES ERJ3GEYJ 271 V (270)	T	5/27
R653	7030003230	S.RES ERJ3GEYJ 180 V (18)	T	5/22.9
R654	7030003370	S.RES ERJ3GEYJ 271 V (270)	T	3.7/24.1
R661	7030003440	S.RES ERJ3GEYJ 102 V (1K)	T	3.5/30.3
R662	7030003320	S.RES ERJ3GEYJ 101 V (100)	B	4.5/29.9
R663	7030003560	S.RES ERJ3GEYJ 103 V (10K)	B	2.1/29.6
R680	7030003560	S.RES ERJ3GEYJ 103 V (10K)	B	41.4/46.8
R685	7030003440	S.RES ERJ3GEYJ 102 V (1K)	T	23.5/41.7
R686	7030003440	S.RES ERJ3GEYJ 102 V (1K)	T	23.5/40.5
R687	7030003360	S.RES ERJ3GEYJ 221 V (220)	T	23.5/39.3
R692	7030003860	S.RES ERJ3GE JPW V	T	25.2/34.7
R693	7030009651	S.RES ERA3YHD 820V (82)	T	28.2/34.7
R694	7030007230	S.RES ERA3YED 102V (1K)	T	29.5/34.5
R701	7030007200	S.RES ERA3YEB 202V (2K)	T	135.4/5.4
R702	7030007210	S.RES ERA3YEB 102V (1K)	T	134.6/3.4
R703	7030007200	S.RES ERA3YEB 202V (2K)	T	134.1/5.4
R704	7030007210	S.RES ERA3YEB 102V (1K)	T	133.3/2.1
R705	7030007200	S.RES ERA3YEB 202V (2K)	T	132.8/5.4
R706	7030007210	S.RES ERA3YEB 102V (1K)	T	132/3.4
R707	7030007220	S.RES ERA3YED 202V (2K)	T	131.5/5.4
R708	7030007230	S.RES ERA3YED 102V (1K)	T	130.7/2.1
R709	7030007220	S.RES ERA3YED 202V (2K)	T	130.2/5.5
R710	7030007230	S.RES ERA3YED 102V (1K)	T	129.4/3.6
R711	7030007220	S.RES ERA3YED 202V (2K)	T	128.9/5.5
R712	7030007230	S.RES ERA3YED 102V (1K)	T	128.1/2.3
R713	7030007220	S.RES ERA3YED 202V (2K)	T	127.6/5.5
R714	7030007230	S.RES ERA3YED 102V (1K)	T	126.8/3.6
R715	7030007220	S.RES ERA3YED 202V (2K)	T	126.3/5.5
R716	7030007230	S.RES ERA3YED 102V (1K)	T	124.4/2.3
R717	7030007220	S.RES ERA3YED 202V (2K)	T	125/5.5
R718	7030007230	S.RES ERA3YED 102V (1K)	T	124.2/3.6
R719	7030007220	S.RES ERA3YED 202V (2K)	T	123.7/5.5
R720	7030007220	S.RES ERA3YED 202V (2K)	T	122.4/5.5
R721	7030003650	S.RES ERJ3GEYJ 563 V (56K)	B	124.9/14.6
R722	7030003370	S.RES ERJ3GEYJ 271 V (270)	B	124.9/16.7
R724	7030003460	S.RES ERJ3GEYJ 152 V (1.5K)	T	145/10.8
R726	7030003520	S.RES ERJ3GEYJ 472 V (4.7K)	T	143.9/17.8
R727	7030003440	S.RES ERJ3GEYJ 102 V (1K)	T	127.8/23.7
R728	7030003440	S.RES ERJ3GEYJ 102 V (1K)	T	126.6/23.7
R729	7030003360	S.RES ERJ3GEYJ 221 V (220)	T	129/23.7
R730	7030003440	S.RES ERJ3GEYJ 102 V (1K)	T	139.6/15.4
R731	7030003470	S.RES ERJ3GEYJ 182 V (1.8K)	T	142/17.3
R732	7030003340	S.RES ERJ3GEYJ 151 V (150)	T	144.6/19.8
R734	7030003340	S.RES ERJ3GEYJ 151 V (150)	B	148.1/15.4
R735	7030003360	S.RES ERJ3GEYJ 221 V (220)	B	150.4/14.6
R736	7030003320	S.RES ERJ3GEYJ 101 V (100)	B	124.9/20.9
R801	7030003260	S.RES ERJ3GEYJ 330 V (33)	T	125.6/50.4
R802	7030003320	S.RES ERJ3GEYJ 101 V (100)	T	125.6/45.2
R803	7030003500	S.RES ERJ3GEYJ 332 V (3.3K)	T	130.3/47
R804	7030003540	S.RES ERJ3GEYJ 682 V (6.8K)	T	133.4/47.7
R805	7030003370	S.RES ERJ3GEYJ 271 V (270)	B	128.5/37.1
R806	7030003230	S.RES ERJ3GEYJ 180 V (18)	B	126.4/36.3
R807	7030003370	S.RES ERJ3GEYJ 271 V (270)	B	124.3/35.5
R808	7030003350	S.RES ERJ3GEYJ 181 V (180)	T	128.7/43.7
R811	7030003370	S.RES ERJ3GEYJ 271 V (270)	T	143.5/22.4
R812	7030003230	S.RES ERJ3GEYJ 180 V (18)	T	140.4/23.1
R813	7030003370	S.RES ERJ3GEYJ 271 V (270)	T	143.5/23.7
R831	7030003330	S.RES ERJ3GEYJ 121 V (120)	B	141.5/35.7
R832	7030003280	S.RES ERJ3GEYJ 470 V (47)	B	139.4/36.3
R833	7030003330	S.RES ERJ3GEYJ 121 V (120)	B	141.5/37.1
R834	7030003380	S.RES ERJ3GEYJ 331 V (330)	T	152.2/38.1

M.=Mounted side (T: Mounted on the Top side, B: Mounted on the Bottom side)
S.=Surface mount

[PLL UNIT]

REF NO.	PARTS NO.	DESCRIPTION	M.	H/V LOCATION
R835	7030003320	S.RES ERJ3GEYJ 101 V (100)	B	154/36.4
R836	7030003370	S.RES ERJ3GEYJ 271 V (270)	B	149.5/27.7
R837	7030003230	S.RES ERJ3GEYJ 180 V (18)	B	148.8/25.4
R838	7030003370	S.RES ERJ3GEYJ 271 V (270)	B	150.4/25.4
R851	7030003860	S.RES ERJ3GE JPW V	T	141/51.5
R852	7030003860	S.RES ERJ3GE JPW V	B	111.2/57.4
R1201	7030003490	S.RES ERJ3GEYJ 272 V (2.7K)	T	38.9/63.6
R1202	7030003470	S.RES ERJ3GEYJ 182 V (1.8K)	T	37.5/62.1
R1205	7030003860	S.RES ERJ3GE JPW V	T	2.4/60.4
R1221	7030003640	S.RES ERJ3GEYJ 473 V (47K)	B	19.5/69.9
R1222	7030003320	S.RES ERJ3GEYJ 101 V (100)	T	23/73.4
R1223	7030003440	S.RES ERJ3GEYJ 102 V (1K)	T	25.1/72.9
R1224	7030003440	S.RES ERJ3GEYJ 102 V (1K)	T	34.3/62.4
R1521	7030003560	S.RES ERJ3GEYJ 103 V (10K)	B	19.6/66.5
R2201	7030003490	S.RES ERJ3GEYJ 272 V (2.7K)	T	25.4/47.7
R2202	7030003470	S.RES ERJ3GEYJ 182 V (1.8K)	T	23/47.7
R2205	7030003860	S.RES ERJ3GE JPW V	T	2.4/49.7
R2221	7030003640	S.RES ERJ3GEYJ 473 V (47K)	T	8/41.3
R2222	7030003320	S.RES ERJ3GEYJ 101 V (100)	B	3.3/36.8
R2223	7030003440	S.RES ERJ3GEYJ 102 V (1K)	B	3.3/34.1
R2224	7030003440	S.RES ERJ3GEYJ 102 V (1K)	T	14.3/43.6
R2512	7030003560	S.RES ERJ3GEYJ 103 V (10K)	B	5.7/41
C1	4030007130	S.CER C1608 CH 1H 101J-T	T	153.7/79.5
C2	4030007130	S.CER C1608 CH 1H 101J-T	T	141.8/78.5
C3	4030007130	S.CER C1608 CH 1H 101J-T	T	153.7/77.5
C5	4030006900	S.CER C1608 JB 1H 103K-T	T	153.7/73.5
C6	4030006900	S.CER C1608 JB 1H 103K-T	T	141.8/72.5
C7	4030006900	S.CER C1608 JB 1H 103K-T	T	153.7/71.5
C8	4030006900	S.CER C1608 JB 1H 103K-T	T	141.8/70.5
C9	4030006900	S.CER C1608 JB 1H 103K-T	T	153.4/67.5
C10	4030006900	S.CER C1608 JB 1H 103K-T	T	141.4/64.8
C11	4030006900	S.CER C1608 JB 1H 103K-T	B	141.8/63.9
C12	4030006900	S.CER C1608 JB 1H 103K-T	T	153.5/61.5
C13	4030006900	S.CER C1608 JB 1H 103K-T	T	143.6/59.1
C14	4030019500	S.CER GRM21BB31A106KE18 (GRM40 B)	B	90.5/60.1
C15	4030011600	S.CER C1608 JB 1E 104K-T	B	92.4/64.1
C16	4030011600	S.CER C1608 JB 1E 104K-T	B	96.5/64.1
C17	4030019500	S.CER GRM21BB31A106KE18 (GRM40 B)	B	98.4/60.7
C18	4030011600	S.CER C1608 JB 1E 104K-T	T	131/58.1
C19	4030011600	S.CER C1608 JB 1E 104K-T	T	124.9/70.5
C20	4030011600	S.CER C1608 JB 1E 104K-T	T	136.6/80.8
C22	4030006900	S.CER C1608 JB 1H 103K-T	B	130.6/75
C23	4030006900	S.CER C1608 JB 1H 103K-T	T	125.8/72.4
C24	4030006900	S.CER C1608 JB 1H 103K-T	B	128.2/74
C25	4030006900	S.CER C1608 JB 1H 103K-T	B	128.2/75.6
C26	4030006900	S.CER C1608 JB 1H 103K-T	T	127.8/70.8
C51	4030007070	S.CER C1608 CH 1H 330J-T	T	94.4/40.8
C52	4030006900	S.CER C1608 JB 1H 103K-T	T	95.7/42.3
C53	4030006860	S.CER C1608 JB 1H 102K-T	T	99.1/38.8
C54	4030006900	S.CER C1608 JB 1H 103K-T	T	102.3/38.5
C55	4030007120	S.CER C1608 CH 1H 820J-T	T	104.7/38.5
C56	4030007040	S.CER C1608 CH 1H 180J-T	T	105.8/40.6
C57	4030007120	S.CER C1608 CH 1H 820J-T	T	105.9/38.5
C58	4030006900	S.CER C1608 JB 1H 103K-T	T	107.8/41.3
C61	4030007170	S.CER C1608 CH 1H 221J-T	T	109.7/39.3
C62	4030007050	S.CER C1608 CH 1H 220J-T	B	115.1/43.4
C63	4030006900	S.CER C1608 JB 1H 103K-T	T	109.7/44.6
C64	4030009510	S.CER C1608 CH 1H 010B-T	T	114.9/45.7
C65	4030007050	S.CER C1608 CH 1H 220J-T	T	114.9/48.5
C67	4030006900	S.CER C1608 JB 1H 103K-T	T	112.9/50.9
C75	4030006900	S.CER C1608 JB 1H 103K-T	T	107.3/52.1
C76	4030007090	S.CER C1608 CH 1H 470J-T	T	103.8/55.2
C77	4030007000	S.CER C1608 CH 1H 090D-T	T	103/53.3
C78	4030007120	S.CER C1608 CH 1H 820J-T	T	102.5/55.2
C79	4030009910	S.CER C1608 CH 1H 040B-T	T	100.4/52
C80	4030007100	S.CER C1608 CH 1H 560J-T	T	99.9/55.2
C83	4030007100	S.CER C1608 CH 1H 560J-T	T	99.3/53.3
C84	4030007170	S.CER C1608 CH 1H 221J-T	T	97.3/54.1
C85	4030007100	S.CER C1608 CH 1H 560J-T	T	98/51.5
C86	4030006900	S.CER C1608 JB 1H 103K-T	B	95.3/53.7
C87	4030006900	S.CER C1608 JB 1H 103K-T	T	105.2/49.3
C88	4030006900	S.CER C1608 JB 1H 103K-T	T	130.8/90.6
C89	4030011600	S.CER C1608 JB 1E 104K-T	T	129.6/85.3
C90	4030011600	S.CER C1608 JB 1E 104K-T	T	133.5/90.1
C92	4030007000	S.CER C1608 CH 1H 090D-T	T	136.7/87.2
C93	4030007090	S.CER C1608 CH 1H 470J-T	T	136.7/89.8
C94	4030007120	S.CER C1608 CH 1H 820J-T	T	138.1/89.8
C95	4030009910	S.CER C1608 CH 1H 040B-T	T	138.8/87.8
C96	4030007100	S.CER C1608 CH 1H 560J-T	T	141.6/87.8
C97	4030007170	S.CER C1608 CH 1H 221J-T	T	143.7/88.5
C98	4030007100	S.CER C1608 CH 1H 560J-T	T	145.1/88.5
C99	4030007100	S.CER C1608 CH 1H 560J-T	T	139.5/89.8
C101	4550007090	S.TAN TEESVA 1A 226M8R	B	109.4/84.1
C102	4030011600	S.CER C1608 JB 1E 104K-T	T	115.3/89
C103	4030011600	S.CER C1608 JB 1E 104K-T	B	106/101
C105	4030011600	S.CER C1608 JB 1E 104K-T	T	106/106.7
C106	4030011600	S.CER C1608 JB 1E 104K-T	T	108.5/108
C107	4030011600	S.CER C1608 JB 1E 104K-T	T	114.2/106.9
C108	4030011600	S.CER C1608 JB 1E 104K-T	T	112/107.4
C109	4030011600	S.CER C1608 JB 1E 104K-T	T	110.6/107.6
C110	4030011600	S.CER C1608 JB 1E 104K-T	T	103.7/103.3
C111	4030011600	S.CER C1608 JB 1E 104K-T	T	105.6/104.7
C112	4030011600	S.CER C1608 JB 1E 104K-T	T	104.2/101.4
C113	4030011600	S.CER C1608 JB 1E 104K-T	T	103/98.6
C114	4030011600	S.CER C1608 JB 1E 104K-T	T	107.1/93.8
C115	4030011600	S.CER C1608 JB 1E 104K-T	T	108.6/93.8
C119	4030011600	S.CER C1608 JB 1E 104K-T	T	104.8/95.7
C120	4030011600	S.CER C1608 JB 1E 104K-T	T	123.8/91.7
C121	4030011600	S.CER C1608 JB 1E 104K-T	T	113.2/86.3

[PLL UNIT]

REF NO.	PARTS NO.	DESCRIPTION	M.	H/V LOCATION
C122	4030019500	S.CER GRM21BB31A106KE18 (GRM40 B)	B	114.3/91.2
C123	4030011600	S.CER C1608 JB 1E 104K-T	T	113.3/90.3
C124	4030019500	S.CER GRM21BB31A106KE18 (GRM40 B)	B	114.5/94.8
C128	4030007140	S.CER C1608 CH 1H 121J-T	T	98.7/88.3
C129	4030007060	S.CER C1608 CH 1H 270J-T	B	102.2/96.9
C132	4030006900	S.CER C1608 JB 1H 103K-T	B	82.2/99.7
C133	4030006900	S.CER C1608 JB 1H 103K-T	B	81.7/92.5
C134	4030006900	S.CER C1608 JB 1H 103K-T	T	82.2/98.1
C137	4030006900	S.CER C1608 JB 1H 103K-T	B	85.6/100
C138	4030006900	S.CER C1608 JB 1H 103K-T	B	83.7/92.9
C139	4030006900	S.CER C1608 JB 1H 103K-T	T	83.4/98.1
C146	4030006900	S.CER C1608 JB 1H 103K-T	T	82.2/93.3
C147	4030006900	S.CER C1608 JB 1H 103K-T	T	83.4/93.3
C150	4030006900	S.CER C1608 JB 1H 103K-T	T	81.7/88.3
C151	4030006900	S.CER C1608 JB 1H 103K-T	B	122.9/107.2
C152	4030006900	S.CER C1608 JB 1H 103K-T	B	115.7/103.2
C153	4030007130	S.CER C1608 CH 1H 101J-T	B	110.8/105.8
C154	4030006900	S.CER C1608 JB 1H 103K-T	B	123.3/103.4
C155	4030006860	S.CER C1608 JB 1H 102K-T	T	94.9/94.3
C156	4030017800	S.CER C1608 CH 1H 561J-T	T	100.5/95.7
C157	4030011340	S.CER C1608 CH 1H 471J-T	T	100.8/88.3
C161	4030007070	S.CER C1608 CH 1H 330J-T	B	110.1/107.7
C163	4030006900	S.CER C1608 JB 1H 103K-T	T	82.6/68.3
C164	4030006900	S.CER C1608 JB 1H 103K-T	T	83.5/73.9
C165	4030010760	S.CER C1608 CH 1H 331J-T	T	91.2/78.6
C166	4030011280	S.CER C1608 CH 1H 271J-T	T	89.1/78.6
C167	4030010760	S.CER C1608 CH 1H 331J-T	T	82/64
C168	4030011280	S.CER C1608 CH 1H 271J-T	T	80.7/63.3
C181	4030006900	S.CER C1608 JB 1H 103K-T	T	51.3/77.5
C182	4550007520	S.TAN F931A106MAABMA	B	53.1/75.2
C183	4340000290	S.MYL ECHU 1C 103JX5	T	50.1/79.1
C184	4550007470	S.TAN F931A107MNMBMA	B	50.6/78.6
C192	4030011600	S.CER C1608 JB 1E 104K-T	T	75.7/36.9
C201	4340000290	S.MYL ECHU 1C 103JX5	T	64.7/86.4
C202	4030009990	S.CER C1608 CH 1H 200J-T	T	68.8/89.6
C203	4030006900	S.CER C1608 JB 1H 103K-T	T	64.2/94.4
C204	4030011340	S.CER C1608 CH 1H 471J-T	T	63.2/88.1
C205	4030006900	S.CER C1608 JB 1H 103K-T	T	73.7/106.1
C206	4030009500	S.CER C1608 CH 1H 0R5B-T	B	68.9/94.1
C207	4030006900	S.CER C1608 JB 1H 103K-T	T	74.3/100.1
C208	4610001860	S.TRI TZB4Z060AB10R00 (TZBX4Z060BA110)	T	70.8/92.6
C209	4030009350	S.CER C1608 CH 1H 3R5B-T	T	74.5/94.1
C222	4030007100	S.CER C1608 CH 1H 560J-T	T	51.6/89.7
C223	4030006900	S.CER C1608 JB 1H 103K-T	T	47.4/94.4
C224	4030011340	S.CER C1608 CH 1H 471J-T	T	46.3/88.1
C225	4030006900	S.CER C1608 JB 1H 103K-T	T	56.9/106.1
C226	4030009510	S.CER C1608 CH 1H 010B-T	B	52.4/94.1
C227	4030006900	S.CER C1608 JB 1H 103K-T	T	57.4/100.1
C228	4610001830	S.TRI TZB4S100AB10R00 (TZBX4N100BA110)	T	53.9/92.6
C229	4030009920	S.CER C1608 CH 1H 050B-T	T	57.7/94.1
C252	4030007150	S.CER C1608 CH 1H 151J-T	T	34.3/89.7
C253	4030006900	S.CER C1608 JB 1H 103K-T	T	30.6/94.4
C254	4030011340	S.CER C1608 CH 1H 471J-T	T	29.6/88.1
C255	4030006900	S.CER C1608 JB 1H 103K-T	T	40/106.1
C256	4030009510	S.CER C1608 CH 1H 010B-T	B	36.1/94.1
C257	4030006900	S.CER C1608 JB 1H 103K-T	T	40.8/100.1
C258	4610001830	S.TRI TZB4S100AB10R00 (TZBX4N100BA110)	T	36.8/92.6
C259	4030011770	S.CER C1608 CH 1H 060B-T	T	41/94.1
C272	4030007130	S.CER C1608 CH 1H 101J-T	T	17.6/89.7
C273	4030006900	S.CER C1608 JB 1H 103K-T	T	13.8/94.4
C274	4030011340	S.CER C1608 CH 1H 471J-T	T	11/87.9
C275	4030006900	S.CER C1608 JB 1H 103K-T	T	23.3/106.1
C276	4030009510	S.CER C1608 CH 1H 010B-T	B	18.3/94.1
C277	4030006900	S.CER C1608 JB 1H 103K-T	T	23.9/100.1
C278	4610001830	S.TRI TZB4S100AB10R00 (TZBX4N100BA110)	T	19.8/92.6
C279	4030007020	S.CER C1608 CH 1H 120J-T	T	24.2/94.1
C301	4030006900	S.CER C1608 JB 1H 103K-T	T	35.2/75.3
C302	4030007080	S.CER C1608 CH 1H 390J-T	T	37.1/76.1
C309	4030006900	S.CER C1608 JB 1H 103K-T	T	29.8/72.2
C310	4030006900	S.CER C1608 JB 1H 103K-T	T	29.8/70.7
C320	4030007080	S.CER C1608 CH 1H 390J-T	T	39.7/77.3
C321	4030007120	S.CER C1608 CH 1H 820J-T	T	39.7/76.1
C322	4030006900	S.CER C1608 JB 1H 103K-T	T	43.9/70.2
C323	4030006900	S.CER C1608 JB 1H 103K-T	T	40.7/66.7
C324	4030006900	S.CER C1608 JB 1H 103K-T	T	44.6/63.1
C326	4030011600	S.CER C1608 JB 1E 104K-T	T	44.6/64.3
C328	4030006990	S.CER C1608 CH 1H 080D-T	T	41.5/75.4
C329	4030007060	S.CER C1608 CH 1H 270J-T	T	42.7/75.4
C330	4030006990	S.CER C1608 CH 1H 080D-T	T	43.2/73.5
C345	4030006900	S.CER C1608 JB 1H 103K-T	B	23.6/76.8
C361	4030006900	S.CER C1608 JB 1H 103K-T	T	14.2/77.1
C362	4030006900	S.CER C1608 JB 1H 103K-T	T	28.1/74.1
C363	4030006900	S.CER C1608 JB 1H 103K-T	T	12.3/77.8
C364	4030006900	S.CER C1608 JB 1H 103K-T	B	23.2/73.9
C381	4030006900	S.CER C1608 JB 1H 103K-T	T	67.3/66.8
C382	4030007130	S.CER C1608 CH 1H 101J-T	T	65.3/68.3
C386	4550005980	S.TAN TEESVA 1A 475M8R	T	67.9/76.8
C387	4030006900	S.CER C1608 JB 1H 103K-T	T	72.2/74.9
C389	4030011340	S.CER C1608 CH 1H 471J-T	T	72.2/73.7
C392	4030006900	S.CER C1608 JB 1H 103K-T	T	72.9/66.8
C393	4340000290	S.MYL ECHU 1C 103JX5	T	63/74.2
C394	4030011340	S.CER C1608 CH 1H 471J-T	T	63.2/75.7
C395	4030006900	S.CER C1608 JB 1H 103K-T	T	65.3/70.9
C396	4030019500	S.CER GRM21BB31A106KE18 (GRM40 B)	B	66.4/68.6
C401	4030019500	S.CER GRM21BB31A106KE18 (GRM40 B)	B	97.9/10.6
C402	4030011600	S.CER C1608 JB 1E 104K-T	T	112.9/21.7

M.=Mounted side (T: Mounted on the Top side, B: Mounted on the Bottom side)
S.=Surface mount

[PLL UNIT]

REF NO.	PARTS NO.	DESCRIPTION	M.	H/V LOCATION
C403	4030011600	S.CER C1608 JB 1E 104K-T	T	100.1/24
C404	4030011600	S.CER C1608 JB 1E 104K-T	B	99.4/22.2
C405	4030011600	S.CER C1608 JB 1E 104K-T	T	94.6/18
C406	4030011600	S.CER C1608 JB 1E 104K-T	T	94.6/15.2
C407	4030011600	S.CER C1608 JB 1E 104K-T	T	93.8/13
C408	4030011600	S.CER C1608 JB 1E 104K-T	T	94.8/11.1
C409	4030006900	S.CER C1608 JB 1H 103K-T	T	99.2/3.6
C410	4030011600	S.CER C1608 JB 1E 104K-T	B	96.9/7.1
C411	4030011600	S.CER C1608 JB 1E 104K-T	T	100.5/3.2
C412	4030011600	S.CER C1608 JB 1E 104K-T	T	103.9/3.5
C413	4550007470	S.TAN F931A107MNMBMA	B	95.7/17.7
C414	4030011600	S.CER C1608 JB 1E 104K-T	T	113.6/11.3
C415	4030011600	S.CER C1608 JB 1E 104K-T	T	112.9/20.5
C416	4030011600	S.CER C1608 JB 1E 104K-T	T	97.3/30.1
C417	4030011600	S.CER C1608 JB 1E 104K-T	T	88.5/27.4
C418	4030011600	S.CER C1608 JB 1E 104K-T	T	90/11.8
C419	4030006900	S.CER C1608 JB 1H 103K-T	T	93.1/22.8
C420	4030011600	S.CER C1608 JB 1E 104K-T	T	91.7/17.6
C421	4550007520	S.TAN F931A106MAABMA	B	93.4/6.4
C422	4030006900	S.CER C1608 JB 1H 103K-T	T	115.9/14.4
C423	4030006900	S.CER C1608 JB 1H 103K-T	T	106.1/3
C424	4030006900	S.CER C1608 JB 1H 103K-T	B	106.3/8.7
C425	4030006900	S.CER C1608 JB 1H 103K-T	B	106.5/10.2
C426	4030006900	S.CER C1608 JB 1H 103K-T	T	108.4/3.2
C427	4030006900	S.CER C1608 JB 1H 103K-T	T	110.3/3.9
C428	4030006900	S.CER C1608 JB 1H 103K-T	T	110.3/2.7
C429	4030011600	S.CER C1608 JB 1E 104K-T	B	96.2/8.5
C430	4030011600	S.CER C1608 JB 1E 104K-T	T	113.5/8.4
C431	4030011600	S.CER C1608 JB 1E 104K-T	T	113.6/13.9
C432	4030006900	S.CER C1608 JB 1H 103K-T	B	81.4/10.2
C433	4030006900	S.CER C1608 JB 1H 103K-T	B	79.1/5.7
C434	4030006900	S.CER C1608 JB 1H 103K-T	B	79.1/1.7
C435	4030011600	S.CER C1608 JB 1E 104K-T	T	90.6/13.7
C436	4030006900	S.CER C1608 JB 1H 103K-T	T	91.8/13.7
C437	4030006900	S.CER C1608 JB 1H 103K-T	T	83.5/18.5
C438	4030006900	S.CER C1608 JB 1H 103K-T	T	83.5/10.5
C439	4030006900	S.CER C1608 JB 1H 103K-T	T	81.8/3.1
C440	4030011600	S.CER C1608 JB 1E 104K-T	T	93.9/7.2
C441	4030006900	S.CER C1608 JB 1H 103K-T	T	117.1/6
C444	4030011600	S.CER C1608 JB 1E 104K-T	T	116.2/3.2
C445	4030011600	S.CER C1608 JB 1E 104K-T	T	113.4/5.8
C446	4030006900	S.CER C1608 JB 1H 103K-T	B	77.5/1.9
C447	4030006900	S.CER C1608 JB 1H 103K-T	T	83.5/8.7
C450	4030006900	S.CER C1608 JB 1H 103K-T	T	83.5/23.3
C451	4030006900	S.CER C1608 JB 1H 103K-T	T	65.1/32
C452	4030007070	S.CER C1608 CH 1H 330J-T	T	68.2/35.1
C453	4030009910	S.CER C1608 CH 1H 040B-T	T	65.5/35.1
C454	4610001850	S.TRI TZB4R200AB10R00 (TZBX4R200BA110)	T	61.2/39.4
C455	4030016550	S.CER CM105 CH 151G 50AT	T	64.7/43
C456	4030016550	S.CER CM105 CH 151G 50AT	T	58.7/43.7
C457	4030016550	S.CER CM105 CH 151G 50AT	T	57.4/43
C458	4030019500	S.CER GRM21BB31A106KE18 (GRM40 B)	T	55.5/46.2
C459	4030006900	S.CER C1608 JB 1H 103K-T	T	54.8/44.1
C460	4030006900	S.CER C1608 JB 1H 103K-T	T	63.4/44.3
C461	4030009920	S.CER C1608 CH 1H 050B-T	B	58.4/35
C462	4030011600	S.CER C1608 JB 1E 104K-T	T	54.7/36.7
C463	4030006900	S.CER C1608 JB 1H 103K-T	T	55.5/33.1
C464	4030006900	S.CER C1608 JB 1H 103K-T	T	74.5/51.3
C465	4030007160	S.CER C1608 CH 1H 181J-T	T	56.7/36.8
C466	4030007150	S.CER C1608 CH 1H 151J-T	T	58/36.8
C467	4030011600	S.CER C1608 JB 1E 104K-T	B	68.9/50.1
C472	4030006990	S.CER C1608 CH 1H 080D-T	B	104.8/22.5
C473	4030007030	S.CER C1608 CH 1H 150J-T	B	103/21.7
C474	4030007060	S.CER C1608 CH 1H 270J-T	B	101.2/22.5
C481	4030006900	S.CER C1608 JB 1H 103K-T	T	19.7/34.2
C482	4550007520	S.TAN F931A106MAABMA	B	18.4/31.7
C483	4030006900	S.CER C1608 JB 1H 103K-T	T	23.3/32.1
C501	4030006900	S.CER C1608 JB 1H 103K-T	T	40.1/23.5
C502	4030009990	S.CER C1608 CH 1H 200J-T	T	36.1/20.3
C503	4030006900	S.CER C1608 JB 1H 103K-T	T	40.4/15.6
C504	4030011340	S.CER C1608 CH 1H 471J-T	T	41.6/21.9
C505	4030006900	S.CER C1608 JB 1H 103K-T	T	31.1/3.9
C506	4030009510	S.CER C1608 CH 1H 010B-T	B	34.9/15.9
C507	4030006900	S.CER C1608 JB 1H 103K-T	T	30.3/9.9
C508	4610001860	S.TRI TZB4Z060AB10R00 (TZBX4Z060BA110)	T	33.8/17.4
C509	4030009350	S.CER C1608 CH 1H 3R5B-T	T	30.1/15.8
C522	4030007100	S.CER C1608 CH 1H 560J-T	T	18.9/20.3
C523	4030006900	S.CER C1608 JB 1H 103K-T	T	23.6/15.6
C524	4030011340	S.CER C1608 CH 1H 471J-T	T	24.7/21.9
C525	4030006900	S.CER C1608 JB 1H 103K-T	T	14.2/3.9
C526	4030009510	S.CER C1608 CH 1H 010B-T	B	18.6/15.9
C527	4030006900	S.CER C1608 JB 1H 103K-T	T	13.4/9.9
C528	4610001830	S.TRI TZB4S100AB10R00 (TZBX4N100BA110)	T	17.2/17.4
C529	4030009920	S.CER C1608 CH 1H 050B-T	T	13.3/15.8
C552	4030007150	S.CER C1608 CH 1H 151J-T	T	52.9/20.3
C553	4030006900	S.CER C1608 JB 1H 103K-T	T	57.2/15.6
C554	4030011340	S.CER C1608 CH 1H 471J-T	T	58.4/21.8
C555	4030006900	S.CER C1608 JB 1H 103K-T	T	47.8/3.9
C556	4030009510	S.CER C1608 CH 1H 010B-T	B	51.7/15.9
C557	4030006900	S.CER C1608 JB 1H 103K-T	T	47/9.9
C558	4610001830	S.TRI TZB4S100AB10R00 (TZBX4N100BA110)	T	51/17.4
C559	4030011770	S.CER C1608 CH 1H 060B-T	T	46.9/15.8
C572	4030007130	S.CER C1608 CH 1H 101J-T	T	69.7/20.3
C573	4030006900	S.CER C1608 JB 1H 103K-T	T	74/15.6
C574	4030011340	S.CER C1608 CH 1H 471J-T	T	76.8/21.8
C575	4030006900	S.CER C1608 JB 1H 103K-T	T	64.6/3.9
C576	4030009510	S.CER C1608 CH 1H 010B-T	B	68.6/15.9
C577	4030006900	S.CER C1608 JB 1H 103K-T	T	63.8/9.9

[PLL UNIT]

REF NO.	PARTS NO.	DESCRIPTION	M.	H/V LOCATION
C578	4610001830	S.TRI TZB4S100AB10R00 (TZBX4N100BA110)	T	68/17.4
C579	4030007020	S.CER C1608 CH 1H 120J-T	T	63.8/15.9
C601	4030006900	S.CER C1608 JB 1H 103K-T	T	44.1/35.3
C602	4030007080	S.CER C1608 CH 1H 390J-T	T	41.2/40.2
C603	4030007010	S.CER C1608 CH 1H 100D-T	T	44.1/37.7
C609	4030006900	S.CER C1608 JB 1H 103K-T	T	44.1/34
C610	4030006900	S.CER C1608 JB 1H 103K-T	B	42.7/37.6
C620	4030007080	S.CER C1608 CH 1H 390J-T	T	41.2/42.8
C621	4030007120	S.CER C1608 CH 1H 820J-T	T	41.2/41.6
C622	4030006900	S.CER C1608 JB 1H 103K-T	T	40.4/47.3
C623	4030006900	S.CER C1608 JB 1H 103K-T	T	29.9/47.8
C624	4030006900	S.CER C1608 JB 1H 103K-T	T	36.5/45.4
C626	4030011600	S.CER C1608 JB 1E 104K-T	T	35.3/45.4
C628	4030006990	S.CER C1608 CH 1H 080D-T	T	44.1/42.8
C629	4030007060	S.CER C1608 CH 1H 270J-T	T	44.1/44.1
C630	4030006990	S.CER C1608 CH 1H 080D-T	T	44.1/45.3
C645	4030006900	S.CER C1608 JB 1H 103K-T	B	7.3/27.8
C661	4030006900	S.CER C1608 JB 1H 103K-T	T	5.8/24.9
C662	4030006900	S.CER C1608 JB 1H 103K-T	T	3.5/29
C663	4030006900	S.CER C1608 JB 1H 103K-T	T	3.7/27
C664	4030006900	S.CER C1608 JB 1H 103K-T	B	5.3/31.2
C681	4030006900	S.CER C1608 JB 1H 103K-T	T	34.9/42.1
C682	4030007130	S.CER C1608 CH 1H 101J-T	T	19.5/38.4
C686	4550005980	S.TAN TEESVA 1A 475M8R	T	30.4/32.2
C687	4030006900	S.CER C1608 JB 1H 103K-T	T	24.5/36.9
C689	4030011340	S.CER C1608 CH 1H 471J-T	T	25.6/43.2
C690	4030006900	S.CER C1608 JB 1H 103K-T	T	26.8/44.5
C691	4030011600	S.CER C1608 JB 1E 104K-T	B	27/37.2
C692	4030006860	S.CER C1608 JB 1H 102K-T	B	32.5/45.1
C693	4030006900	S.CER C1608 JB 1H 103K-T	T	30.7/34.5
C694	4030011340	S.CER C1608 CH 1H 471J-T	T	26.6/32.2
C695	4030006900	S.CER C1608 JB 1H 103K-T	T	34.8/39.4
C696	4030019500	S.CER GRM21BB31A106KE18 (GRM40 B)	T	30.2/43.7
C701	4030019500	S.CER GRM21BB31A106KE18 (GRM40 B)	B	134.7/19.9
C702	4030011600	S.CER C1608 JB 1E 104K-T	T	131/23
C703	4030011600	S.CER C1608 JB 1E 104K-T	T	123.9/20.5
C704	4030011600	S.CER C1608 JB 1E 104K-T	B	128.5/16.4
C705	4030011600	S.CER C1608 JB 1E 104K-T	T	122.8/12.1
C706	4030011600	S.CER C1608 JB 1E 104K-T	B	130.6/8.6
C707	4030011600	S.CER C1608 JB 1E 104K-T	T	138.4/12
C708	4030006900	S.CER C1608 JB 1H 103K-T	B	124.9/19.1
C709	4030011340	S.CER C1608 CH 1H 471J-T	T	139.1/2.1
C710	4030007120	S.CER C1608 CH 1H 820J-T	T	139.3/3.6
C711	4030017870	S.CER C1608 CH 1H 681J-T	T	141.4/3.3
C712	4030007060	S.CER C1608 CH 1H 270J-T	T	140.5/8.2
C713	4030017800	S.CER C1608 CH 1H 561J-T	T	142.7/3.2
C714	4030011280	S.CER C1608 CH 1H 271J-T	T	143.6/8.2
C715	4030006860	S.CER C1608 JB 1H 102K-T	T	144.6/6.6
C716	4030011280	S.CER C1608 CH 1H 271J-T	T	145/9.5
C717	4030011600	S.CER C1608 JB 1E 104K-T	T	124.5/21.7
C718	4030006900	S.CER C1608 JB 1H 103K-T	T	124.5/22.9
C719	4550007710	S.TAN TEESVB2 1A 476M8R	B	130.2/20.9
C720	4030006900	S.CER C1608 JB 1H 103K-T	T	137.3/2.8
C721	4030006900	S.CER C1608 JB 1H 103K-T	B	142.5/10.4
C722	4030011600	S.CER C1608 JB 1E 104K-T	T	142.9/12.8
C723	4030006900	S.CER C1608 JB 1H 103K-T	T	142.9/16
C724	4030011600	S.CER C1608 JB 1E 104K-T	T	141.7/21.6
C725	4030011600	S.CER C1608 JB 1E 104K-T	T	143.5/21.1
C726	4030017490	S.CER C1608 JB 1A 105K-T	T	142.9/14.7
C801	4030006900	S.CER C1608 JB 1H 103K-T	T	125.6/47.8
C802	4030006900	S.CER C1608 JB 1H 103K-T	T	131.6/47
C803	4030006900	S.CER C1608 JB 1H 103K-T	T	133.4/46.4
C804	4030006900	S.CER C1608 JB 1H 103K-T	B	126.6/42.5
C831	4030009910	S.CER C1608 CH 1H 040B-T	T	144.6/42.5
C832	4030009510	S.CER C1608 CH 1H 010B-T	T	154.8/42.1
C834	4030007030	S.CER C1608 CH 1H 150J-T	T	152.2/36.8
C835	4030006900	S.CER C1608 JB 1H 103K-T	T	154.8/36.8
C838	4030007020	S.CER C1608 CH 1H 120J-T	T	150.5/46.7
C851	4030006900	S.CER C1608 JB 1H 103K-T	T	143.1/50.7
C852	4030006900	S.CER C1608 JB 1H 103K-T	B	111.9/55.3
C853	4030006900	S.CER C1608 JB 1H 103K-T	T	140.5/49.8
C854	4030006900	S.CER C1608 JB 1H 103K-T	B	108.1/52.8
C855	4030019500	S.CER GRM21BB31A106KE18 (GRM40 B)	B	140.8/50.2
C856	4030019500	S.CER GRM21BB31A106KE18 (GRM40 B)	B	103.4/54.5
C1201	4030007080	S.CER C1608 CH 1H 390J-T	T	31.1/66.5
C1202	4030006980	S.CER C1608 CH 1H 070D-T	T	36.2/66.2
C1203	4030007020	S.CER C1608 CH 1H 120J-T	T	37.4/66.2
C1204	4030007080	S.CER C1608 CH 1H 390J-T	T	33/62.4
C1205	4030006900	S.CER C1608 JB 1H 103K-T	T	20.4/73.4
C1222	4030008560	S.CER C1608 CH 1H 300J-T	T	24.1/64.4
C1223	4030009530	S.CER C1608 CH 1H 030B-T	T	26/65.1
C1224	4030007070	S.CER C1608 CH 1H 330J-T	T	24.1/65.7
C1225	4030009520	S.CER C1608 CH 1H 020B-T	T	25.6/67
C1226	4030007050	S.CER C1608 CH 1H 220J-T	T	23.1/68.1
C1227	4030007100	S.CER C1608 CH 1H 560J-T	T	24.9/68.9
C1228	4030011280	S.CER C1608 CH 1H 271J-T	T	24.2/70.8
C1229	4030007100	S.CER C1608 CH 1H 560J-T	T	26.3/72.9
C1230	4030006900	S.CER C1608 JB 1H 103K-T	T	23/72.2
C1231	4030007010	S.CER C1608 CH 1H 100D-T	B	24.9/68.2
C1232	4030006900	S.CER C1608 JB 1H 103K-T	B	18.8/68.1
C1503	4030007010	S.CER C1608 CH 1H 100D-T	T	36.4/74.2
C1505	4030011810	S.CER C1608 JB 1A 224K-T	T	72.9/65.6
C1521	4030006900	S.CER C1608 JB 1H 103K-T	B	20.3/64.9
C1522	4030006900	S.CER C1608 JB 1H 103K-T	B	18.8/62.4
C2201	4030007080	S.CER C1608 CH 1H 390J-T	T	21.8/47.7
C2202	4030006980	S.CER C1608 CH 1H 070D-T	T	19.5/42.5
C2203	4030007020	S.CER C1608 CH 1H 120J-T	T	24.2/46.9
C2204	4030007080	S.CER C1608 CH 1H 390J-T	T	19.2/48.4
C2205	4030006900	S.CER C1608 JB 1H 103K-T	T	26.8/47.7

M.=Mounted side (T: Mounted on the Top side, B: Mounted on the Bottom side)
S.=Surface mount

[PLL UNIT]

REF NO.	PARTS NO.	DESCRIPTION		M.	H/V LOCATION
C2222	4030008560	S.CER	C1608 CH 1H 300J-T	T	9.6/46.6
C2223	4030009530	S.CER	C1608 CH 1H 030B-T	T	10.3/44.8
C2224	4030007070	S.CER	C1608 CH 1H 330J-T	T	9.6/42.9
C2225	4030009520	S.CER	C1608 CH 1H 020B-T	T	11.4/37.3
C2226	4030007050	S.CER	C1608 CH 1H 220J-T	T	7/38.7
C2227	4030007100	S.CER	C1608 CH 1H 560J-T	T	7.9/36.6
C2228	4030011280	S.CER	C1608 CH 1H 271J-T	T	7.1/34.4
C2229	4030007100	S.CER	C1608 CH 1H 560J-T	T	8.8/34.4
C2230	4030006900	S.CER	C1608 JB 1H 103K-T	B	4.9/34.1
C2231	4030007010	S.CER	C1608 CH 1H 100D-T	T	11.5/41.3
C2232	4030006900	S.CER	C1608 JB 1H 103K-T	B	5.7/42.5
C2511	4030006900	S.CER	C1608 JB 1H 103K-T	B	9.5/47.3
C2512	4030006900	S.CER	C1608 JB 1H 103K-T	T	5.7/47.1
J1	6510022581	S.CON	24FMN-BMTTR-A-TBT(LF)(SN)	T	147.7/71
J51	6510007020	CON	TMP-J01X-V6		
J81	6510007020	CON	TMP-J01X-V6		
J351	6510007020	CON	TMP-J01X-V6		
J651	6510007020	CON	TMP-J01X-V6		
J701	6510007020	CON	TMP-J01X-V6		
J831	6510007020	CON	TMP-J01X-V6		
J851	6510007020	CON	TMP-J01X-V6		
EP1	6910019900	S.BEA	MPZ1608S601AT	T	142.1/60.5
EP2	6910015970	S.BEA	MMZ1608B 301CT-AS	B	148.3/59.4
EP3	6910015970	S.BEA	MMZ1608B 301CT-AS	B	142.5/59
EP4	6910019900	S.BEA	MPZ1608S601AT	T	142.1/62.9
EP5	6910019900	S.BEA	MPZ1608S601AT	B	149.3/67.5
EP6	6910015970	S.BEA	MMZ1608B 301CT-AS	B	141.8/70.5
EP7	6910015970	S.BEA	MMZ1608B 301CT-AS	B	149.3/71.5
EP8	6910015970	S.BEA	MMZ1608B 301CT-AS	B	141.8/72.5
EP9	6910015970	S.BEA	MMZ1608B 301CT-AS	B	149.3/73.5
EP103	6910012350	S.BEA	MMZ1608Y 102BT	T	103/101.4
EP204	6910012350	S.BEA	MMZ1608Y 102BT	B	71.1/101.2
EP224	6910012350	S.BEA	MMZ1608Y 102BT	B	62.8/105.3
EP254	6910012350	S.BEA	MMZ1608Y 102BT	B	48.1/105.7
EP274	6910012350	S.BEA	MMZ1608Y 102BT	B	20.7/101.2
EP382	6910012350	S.BEA	MMZ1608Y 102BT	T	66/75.1
EP401	6910012350	S.BEA	MMZ1608Y 102BT	T	106.1/4.2
EP402	6910015970	S.BEA	MMZ1608B 301CT-AS	B	106.7/5.4
EP403	6910015970	S.BEA	MMZ1608B 301CT-AS	B	96.7/3.2
EP404	6910015970	S.BEA	MMZ1608B 301CT-AS	B	108.3/5.4
EP405	6910015970	S.BEA	MMZ1608B 301CT-AS	B	96/1.8
EP406	6910015970	S.BEA	MMZ1608B 301CT-AS	B	109.9/5.4
EP407	6910015970	S.BEA	MMZ1608B 301CT-AS	T	115.2/6.3
EP504	6910012350	S.BEA	MMZ1608Y 102BT	B	37/4.6
EP524	6910012350	S.BEA	MMZ1608Y 102BT	B	20.5/4.3
EP554	6910012350	S.BEA	MMZ1608Y 102BT	B	53.9/4.4
EP574	6910012350	S.BEA	MMZ1608Y 102BT	B	71/4.1
EP682	6910012350	S.BEA	MMZ1608Y 102BT	T	25.2/33.5
EP1503	6910015970	S.BEA	MMZ1608B 301CT-AS	T	39.6/65.4
EP2501	6910015970	S.BEA	MMZ1608B 301CT-AS	T	28.4/47.7

[RF UNIT]

REF NO.	PARTS NO.	DESCRIPTION		M.	H/V LOCATION
IC161	1190001930	S.IC	PS7122AL-1A-E3	T	134.8/91.3
IC201	1110007400	S.IC	BGA616	T	4.1/33.2
IC301	1130011530	S.IC	CD74HC4094M96	B	40.1/13.4
IC303	1130011530	S.IC	CD74HC4094M96	B	40.1/24.3
IC305	1130011530	S.IC	CD74HC4094M96	B	29/19
IC1401	1110006420	S.IC	UPC2708TB-E3-A	T	53.6/40
Q101	1590003680	S.TRA	KRC402 RTK/P	T	9.2/68
Q102	1590003680	S.TRA	KRC402 RTK/P	T	5.6/68.4
Q103	1530003900	S.TRA	KTC4075 BL-RTK/P	B	74.7/71.7
Q104	1590003770	S.TRA	KRA302E-RTK/P	B	72.4/73.2
Q151	1590003680	S.TRA	KRC402 RTK/P	T	46.8/83.2
Q152	1590003680	S.TRA	KRC402 RTK/P	T	44/81.2
Q153	1590003680	S.TRA	KRC402 RTK/P	T	49.5/83.3
Q161	1590003680	S.TRA	KRC402 RTK/P	B	115.2/81
Q162	1590003680	S.TRA	KRC402 RTK/P	T	143/85.6
Q201	1590003770	S.TRA	KRA302E-RTK/P	T	7.5/27.8
Q202	1590003680	S.TRA	KRC402 RTK/P	T	8/30.8
Q203	1590003680	S.TRA	KRC402 RTK/P	T	9.5/34.5
Q204	1590003680	S.TRA	KRC402 RTK/P	T	6.7/34.4
Q303	1590003680	S.TRA	KRC402 RTK/P	T	44.5/13.5
Q307	1590003680	S.TRA	KRC402 RTK/P	T	38/13.3
Q308	1590003770	S.TRA	KRA302E-RTK/P	T	38.2/7.9
Q309	1590003680	S.TRA	KRC402 RTK/P	T	38/16.2
Q310	1590003770	S.TRA	KRA302E-RTK/P	T	40.3/7.9
Q311	1590003680	S.TRA	KRC402 RTK/P	T	43.6/9.6
Q312	1590003770	S.TRA	KRA302E-RTK/P	T	44/7
Q313	1590003680	S.TRA	KRC402 RTK/P	T	34/11.5
Q314	1590003770	S.TRA	KRA302E-RTK/P	T	31.7/11.1
Q317	1590003680	S.TRA	KRC402 RTK/P	T	43.4/24.3
Q318	1590003770	S.TRA	KRA302E-RTK/P	T	28.3/6.5
Q319	1590003680	S.TRA	KRC402 RTK/P	T	39.3/23.1
Q320	1590003770	S.TRA	KRA302E-RTK/P	T	27.9/9.7
Q321	1590003680	S.TRA	KRC402 RTK/P	B	31.1/7.5
Q322	1590003770	S.TRA	KRA302E-RTK/P	B	28.6/5.7
Q323	1590003680	S.TRA	KRC402 RTK/P	B	32.4/11.1
Q324	1590003770	S.TRA	KRA302E-RTK/P	B	27.8/8.3
Q325	1590003680	S.TRA	KRC402 RTK/P	T	33/25.1
Q326	1590003770	S.TRA	KRA302E-RTK/P	T	25.4/8.3
Q327	1590003680	S.TRA	KRC402 RTK/P	B	28.5/12.5
Q328	1590003770	S.TRA	KRA302E-RTK/P	B	27/10.3
Q329	1590003680	S.TRA	KRC402 RTK/P	T	32.9/27.6
Q330	1590003770	S.TRA	KRA302E-RTK/P	T	30.1/28.2
Q331	1590003680	S.TRA	KRC402 RTK/P	B	29/29.3
Q332	1590003770	S.TRA	KRA302E-RTK/P	B	28.5/32.1
Q333	1590003680	S.TRA	KRC402 RTK/P	B	24.9/31.4
Q334	1590003770	S.TRA	KRA302E-RTK/P	B	22.2/30.9
Q335	1590003680	S.TRA	KRC402 RTK/P	B	24.9/28.8
Q336	1590003770	S.TRA	KRA302E-RTK/P	B	22.1/28.3
Q337	1590003680	S.TRA	KRC402 RTK/P	T	26.5/17.8
Q338	1590003770	S.TRA	KRA302E-RTK/P	T	26/20.9
Q339	1590003680	S.TRA	KRC402 RTK/P	B	24.9/26.2
Q340	1590003770	S.TRA	KRA302E-RTK/P	B	22.1/25.7
Q341	1590003680	S.TRA	KRC402 RTK/P	T	27.7/25
Q342	1590003770	S.TRA	KRA302E-RTK/P	T	25.2/24.4
Q343	1590003680	S.TRA	KRC402 RTK/P	T	26.3/27.7
Q344	1590003770	S.TRA	KRA302E-RTK/P	T	23.8/27.1
Q345	1590003680	S.TRA	KRC402 RTK/P	T	24.9/30.4
Q346	1590003770	S.TRA	KRA302E-RTK/P	T	22.4/29.8
Q1001	1560000641	S.FET	2SK1740-4/5-TB-E	T	72.6/26.6
Q1002	1560000641	S.FET	2SK1740-4/5-TB-E	T	72.6/23.5
Q1003	1560000641	S.FET	2SK1740-4/5-TB-E	B	92.6/27.5
Q1004	1560000641	S.FET	2SK1740-4/5-TB-E	T	90.1/31.9
Q1005	1560000641	S.FET	2SK1740-4/5-TB-E	T	90.1/24.1
Q1006	1560000641	S.FET	2SK1740-4/5-TB-E	B	92.6/23.4
Q1007	1530003900	S.TRA	KTC4075 BL-RTK/P	T	106.8/33.2
Q1008	1530003340	S.TRA	2SC3357-T1 RF	T	107.6/20.6
Q1101	1530003340	S.TRA	2SC3357-T1 RF	T	81.1/19.7
Q1201	1560000641	S.FET	2SK1740-4/5-TB-E	T	72.3/48.5
Q1202	1560000641	S.FET	2SK1740-4/5-TB-E	T	72.3/45.5
Q1203	1560000641	S.FET	2SK1740-4/5-TB-E	B	92.6/49.9
Q1204	1560000641	S.FET	2SK1740-4/5-TB-E	T	89.2/51.1
Q1205	1560000641	S.FET	2SK1740-4/5-TB-E	T	89.2/45.5
Q1206	1560000641	S.FET	2SK1740-4/5-TB-E	B	92.6/46.5
Q1207	1530003900	S.TRA	KTC4075 BL-RTK/P	T	103.3/58.6
Q1208	1530003340	S.TRA	2SC3357-T1 RF	T	108.5/51.8
Q1209	1530003851	S.TRA	2SC5551F-TD-E	B	98.9/56.2
Q1301	1530003340	S.TRA	2SC3357-T1 RF	T	75.5/62.4
Q1551	1560000561	S.FET	2SK882-GR(TE85L,F)	B	121/70.1
Q1901	1590003680	S.TRA	KRC402 RTK/P	T	130.9/27.2
Q1902	1590003770	S.TRA	KRA302E-RTK/P	T	130.9/29.5
Q2001	1560000641	S.FET	2SK1740-4/5-TB-E	T	106.6/76
D101	1790000980	S.DIO	MA742(TX)	B	83.2/72.4
D104	1750000581	S.DIO	1SV307(TPH3,F)	B	14.1/79.4
D105	1750001320	S.DIO	KDS4148U RTK/P	B	77.4/74.7
D106	1750001320	S.DIO	KDS4148U RTK/P	T	59.4/77.7
D107	1750001320	S.DIO	KDS4148U RTK/P	T	67/75.1
D108	1750001320	S.DIO	KDS4148U RTK/P	B	86.2/75
D109	1750001320	S.DIO	KDS4148U RTK/P	B	94.7/75.7
D151	1750000581	S.DIO	1SV307(TPH3,F)	T	46/86
D152	1750000581	S.DIO	1SV307(TPH3,F)	B	16.4/82.1
D161	1750001320	S.DIO	KDS4148U RTK/P	B	111/83.4
D201	1750000581	S.DIO	1SV307(TPH3,F)	B	2.9/77.8
D501	1750000581	S.DIO	1SV307(TPH3,F)	T	20.5/71.8
D502	1750000581	S.DIO	1SV307(TPH3,F)	T	28.8/41.8
D551	1750000581	S.DIO	1SV307(TPH3,F)	T	31/74.8
D552	1750000581	S.DIO	1SV307(TPH3,F)	T	33/44.6
D601	1750000581	S.DIO	1SV307(TPH3,F)	T	21.4/75.2
D602	1750000581	S.DIO	1SV307(TPH3,F)	T	25.7/74.5
D603	1750000581	S.DIO	1SV307(TPH3,F)	T	28.8/43.6
D604	1750000581	S.DIO	1SV307(TPH3,F)	B	42/44.9

M.=Mounted side (T: Mounted on the Top side, B: Mounted on the Bottom side)
S.=Surface mount

[RF UNIT]

REF NO.	PARTS NO.	DESCRIPTION	M.	H/V LOCATION
D651	1750000581	S.DIO 1SV307(TPH3,F)	T	43.8/74.2
D652	1750000581	S.DIO 1SV307(TPH3,F)	T	42.5/45.6
D701	1750000581	S.DIO 1SV307(TPH3,F)	B	41.6/75.9
D702	1750000581	S.DIO 1SV307(TPH3,F)	B	45.1/45.3
D751	1750000581	S.DIO 1SV307(TPH3,F)	B	37.2/76
D752	1750000581	S.DIO 1SV307(TPH3,F)	B	35.7/45.3
D801	1750000581	S.DIO 1SV307(TPH3,F)	T	10.9/65.6
D802	1750000581	S.DIO 1SV307(TPH3,F)	T	34.8/42.5
D851	1750000581	S.DIO 1SV307(TPH3,F)	B	20.5/72.6
D852	1750000581	S.DIO 1SV307(TPH3,F)	B	32/44.8
D951	1750000581	S.DIO 1SV307(TPH3,F)	T	51.8/29.1
D1001	1750000971	S.DIO CPH5513-TL-E	T	103.5/27.5
D1002	1750000441	S.DIO 1SV263-TL-E	T	109.8/31.8
D1003	1750000971	S.DIO CPH5513-TL-E	T	107.1/27.5
D1004	1750001320	S.DIO KDS4148U RTK/P	B	109/32.4
D1201	1750000971	S.DIO CPH5513-TL-E	T	103.5/46.2
D1202	1750001310	S.DIO KDS114 RTK/PA	T	100.2/60.7
D1203	1750000441	S.DIO 1SV263-TL-E	T	103.8/50.5
D1204	1750000971	S.DIO CPH5513-TL-E	T	107/46.2
D1205	1750001320	S.DIO KDS4148U RTK/P	T	102.5/62.1
D1301	1750000581	S.DIO 1SV307(TPH3,F)	T	93.4/64.1
D1302	1750000581	S.DIO 1SV307(TPH3,F)	B	88.6/65.6
D1401	1750000581	S.DIO 1SV307(TPH3,F)	B	46.9/35.1
D1451	1750000431	S.DIO HSB88WSTR-E	T	80.2/71
D1501	1750001310	S.DIO KDS114 RTK/PA	T	102.7/68.6
D1551	1750000581	S.DIO 1SV307(TPH3,F)	T	124.2/30.5
D1601	1750000581	S.DIO 1SV307(TPH3,F)	T	122.1/30.5
D1701	1750000581	S.DIO 1SV307(TPH3,F)	B	149.5/43.3
D1702	1750000581	S.DIO 1SV307(TPH3,F)	B	150.4/79.8
D1703	1750000581	S.DIO 1SV307(TPH3,F)	B	125.2/37.5
D1704	1750000581	S.DIO 1SV307(TPH3,F)	B	131.8/78.9
D1705	1750000581	S.DIO 1SV307(TPH3,F)	B	137.9/37.5
D1706	1750000581	S.DIO 1SV307(TPH3,F)	B	139.9/78.3
L101	6200007780	S.COI LQW2BHNR12J03L	T	46.2/89.3
L102	6200007760	S.COI LQW2BHN82NJ03L	T	40.1/88.4
L103	6200010730	S.COI C2520C-68NG-A	T	14.7/83.4
L104	6200005491	S.COI NLV32T-331J	B	9.3/67.5
L137	6190001650	COI ELC06D102E		
L151	6200005491	S.COI NLV32T-331J	T	44.8/78
L161	6200002041	S.COI NLV25T-101J	B	99.2/88.4
L201	6200009810	S.COI LQH31HNR61J03L	T	3.8/20
L202	6200002181	S.COI NLV25T-R12J	T	3.3/23
L203	6200005041	S.COI NLV25T-220J	T	3.9/27.6
L251	6200005491	S.COI NLV32T-331J	B	12.2/76.1
L252	6200005491	S.COI NLV32T-331J	B	10.4/72.5
L253	6180003560	COI SP0406-5R6K-6		
L271	6180003550	COI SP0406-4R7K-6		
L501	6200010780	S.COI C2520C-1R0G-A	T	15.1/65.7
L502	6200010970	S.COI C2520C-1R8G-A(1.8U)	T	15.1/60.1
L503	6200010970	S.COI C2520C-1R8G-A(1.8U)	T	15.1/54.4
L504	6200010780	S.COI C2520C-1R0G-A	T	15.2/43.4
L505	6200010970	S.COI C2520C-1R8G-A(1.8U)	T	15.1/49.2
L551	6200010770	S.COI C2520C-R68G-A	T	34.8/70.4
L552	6200010950	S.COI C2520C-1R5G-A (1.5U)	T	34.8/64.7
L553	6200010950	S.COI C2520C-1R5G-A (1.5U)	T	34.8/59.1
L554	6200010770	S.COI C2520C-R68G-A	T	34.9/47.7
L555	6200010950	S.COI C2520C-1R5G-A (1.5U)	T	34.9/53.3
L601	6200010530	S.COI C2520C-R56G-A (0.56U)	T	25.1/70.3
L602	6200010450	S.COI C2520C-R82G-A (0.82U)	T	25.1/64.6
L603	6200010450	S.COI C2520C-R82G-A (0.82U)	T	25.1/59
L604	6200010530	S.COI C2520C-R56G-A (0.56U)	T	25.1/48
L605	6200010450	S.COI C2520C-R82G-A (0.82U)	T	25/53.3
L651	6200010870	S.COI C2520C-R33G-A (0.33U)	T	44.3/69.8
L652	6200010770	S.COI C2520C-R68G-A	T	44.3/64.1
L653	6200010770	S.COI C2520C-R68G-A	T	44.2/58.7
L654	6200010870	S.COI C2520C-R33G-A (0.33U)	T	44.4/47.5
L655	6200010770	S.COI C2520C-R68G-A	T	44.3/53.4
L701	6200010980	S.COI LQW2BHNR27J03L	B	45.1/67.2
L702	6200008080	S.COI LQW2BHNR22J03L	B	45.6/58.9
L703	6200010980	S.COI LQW2BHNR27J03L	B	44.6/55.7
L751	6200008100	S.COI LQH31HNR14J03L	B	33.8/70
L753	6200007810	S.COI LQH31HN95NK03L	B	38.6/59.5
L754	6200008100	S.COI LQH31HNR14J03L	B	34.2/49.2
L801	6200010800	S.COI C2520C-4R7G-A	T	33.8/34.4
L802	6200010800	S.COI C2520C-4R7G-A	T	34.3/38.2
L803	6200009060	S.COI LQH32CN101K23L	T	22.7/38
L851	6200007810	S.COI LQH31HN95NK03L	B	25/69.5
L852	6200009810	S.COI LQH31HNR61J03L	B	25/64.4
L853	6200009810	S.COI LQH31HNR61J03L	B	28.5/60
L854	6200009810	S.COI LQH31HNR61J03L	B	25/54.5
L855	6200007810	S.COI LQH31HN95NK03L	B	25/49.5
L901	6200005491	S.COI NLV32T-331J	B	42.7/32.1
L904	6140004680	S.COI LR-528 4KBL	T	54.5/24.4
L905	6140004680	S.COI LR-528 4KBL	T	56.7/13.2
L971	6200005491	S.COI NLV32T-331J	B	25.9/41.7
L972	6200005491	S.COI NLV32T-331J	B	25.9/37.5
L1001	6200012470	S.COI 0.30-1.7-7TL 45.3N <COMO>	T	61.6/20.2
L1002	6200013080	S.COI 0.25-1.9-10TL 97.0N <COMO>	T	62.8/24.3
L1003	6200013000	S.COI 0.25-1.9-13TL 135N <COMO>	T	62.8/29.1
L1004	6200008940	S.COI LQH32MN331K23L	T	65.7/33.6
L1005	6200010870	S.COI C2520C-R33G-A (0.33U)	T	72.4/31.7
L1006	6200009060	S.COI LQH32CN101K23L	B	85.6/18.3
L1007	6140004420	COI LR-501		
L1008	6200007780	S.COI LQW2BHNR12J03L	B	94.9/33.8
L1009	6200007780	S.COI LQW2BHNR12J03L	B	95.4/19.6
L1010	6200009060	S.COI LQH32CN101K23L	T	99.9/21.2
L1011	6150005320	COI LS-546 7K7		
L1012	6200005011	S.COI NLV25T-100J	B	105.3/24.5
L1013	6200005011	S.COI NLV25T-100J	T	112.6/31.2
L1014	6200005011	S.COI NLV25T-100J	B	108.9/29.7
L1015	6200005011	S.COI NLV25T-100J	T	113.7/27.1
L1016	6200005011	S.COI NLV25T-100J	T	112/12.5

[RF UNIT]

REF NO.	PARTS NO.	DESCRIPTION	M.	H/V LOCATION
L1017	6200010740	S.COI C2520C-R27G-A	T	108.9/15.7
L1018	6140002810	S.COI LR-317	T	122.7/35.1
L1019	6190001650	COI ELC06D102E		
L1020	6200003711	S.COI NLV25T-2R7J	B	111.3/14.6
L1101	6130002961	S.COI #617DB-1327=P3	T	90.7/20.1
L1102	6200008090	S.COI LQW2BHN68NJ03L	T	93.3/15.1
L1103	6200008090	S.COI LQW2BHN68NJ03L	T	89.4/13.6
L1104	6200007750	S.COI LQW2BHN56NJ03L	T	85.8/13.1
L1105	6200005011	S.COI NLV25T-100J	T	79.5/12.1
L1106	6200003281	S.COI NLV25T-2R2J	T	75.4/15.5
L1201	6200012470	S.COI 0.30-1.7-7TL 45.3N <COMO>	T	61.8/37.8
L1202	6200013080	S.COI 0.25-1.9-10TL 97.0N <COMO>	T	62.6/42.2
L1203	6200013000	S.COI 0.25-1.9-13TL 135N <COMO>	T	62/47
L1204	6200008940	S.COI LQH32MN331K23L	T	65.3/50.7
L1205	6200010870	S.COI C2520C-R33G-A (0.33U)	T	72.4/52.2
L1206	6200009060	S.COI LQH32CN101K23L	B	79.6/50.8
L1207	6140004420	COI LR-501		
L1208	6200007780	S.COI LQW2BHNR12J03L	B	92.4/42.5
L1209	6200007780	S.COI LQW2BHNR12J03L	B	89.3/53.5
L1210	6200009060	S.COI LQH32CN101K23L	T	98.6/54.4
L1211	6150005320	COI LS-546 7K7		
L1212	6200005011	S.COI NLV25T-100J	B	105.3/45.1
L1214	6200005011	S.COI NLV25T-100J	B	112.1/52.3
L1215	6200005011	S.COI NLV25T-100J	B	104.6/49
L1216	6200005011	S.COI NLV25T-100J	B	110.8/46.4
L1217	6200005011	S.COI NLV25T-100J	T	113.7/56.7
L1218	6200010740	S.COI C2520C-R27G-A	T	114.3/48.7
L1219	6200003711	S.COI NLV25T-2R7J	B	111/64.4
L1220	6200010980	S.COI LQW2BHNR27J03L	B	94.7/59.4
L1221	6200005011	S.COI NLV25T-100J	B	91.9/60.5
L1242	6200005011	S.COI NLV25T-100J	B	106.7/58.5
L1301	6130002961	S.COI #617DB-1327=P3	T	91.8/54.9
L1302	6200003281	S.COI NLV25T-2R2J	B	99.4/63
L1303	6200008090	S.COI LQW2BHN68NJ03L	T	89.5/62.4
L1304	6200008090	S.COI LQW2BHN68NJ03L	T	86.9/58.8
L1305	6200007750	S.COI LQW2BHN56NJ03L	T	85.9/63.2
L1306	6200005011	S.COI NLV25T-100J	T	80.2/55.7
L1307	6200003281	S.COI NLV25T-2R2J	T	79.2/58.9
L1401	6200005041	S.COI NLV25T-220J	T	50.2/40.2
L1402	6200002641	S.COI NLV25T-R15J	T	52/46.4
L1403	6200002431	S.COI NLV25T-082J	T	51.4/51.2
L1451	6130002961	S.COI #617DB-1327=P3	T	73.9/71
L1452	6130002961	S.COI #617DB-1327=P3	T	86.6/71
L1551	6200004600	S.COI MLF1608D R15K-T	B	98.7/69.4
L1552	6200004600	S.COI MLF1608D R15K-T	B	103.3/72
L1553	6150004280	COI LS-484B (C-14927)		
L1554	6200002611	S.COI NLV25T-R47J	B	124.2/71
L1555	6200003281	S.COI NLV25T-2R2J	B	127.6/60
L1601	6200010760	S.COI C2520C-27NG-A	T	132.6/32.7
L1602	6200003281	S.COI NLV25T-2R2J	T	119.8/30.5
L1703	6200003281	S.COI NLV25T-2R2J	B	143.4/46.4
L1704	6200003281	S.COI NLV25T-2R2J	B	144.2/74.4
R101	7540000130	ABS 2P-50A-301		
R102	7030003560	S.RES ERJ3GEYJ 103 V (10K)	T	52.4/91.5
R103	7030003480	S.RES ERJ3GEYJ 222 V (2.2K)	B	77.7/70.9
R104	7030003680	S.RES ERJ3GEYJ 104 V (100K)	B	74.6/69.3
R105	7030003860	S.RES ERJ3GE JPW V	B	80.5/70.9
R106	7030003340	S.RES ERJ3GEYJ 151 V (150)	B	69.5/89.5
R107	7030008180	S.RES ERJ12YJ331U (330)	B	12.8/67.5
R108	7030003680	S.RES ERJ3GEYJ 104 V (100K)	T	6.3/70.4
R109	7030003560	S.RES ERJ3GEYJ 103 V (10K)	T	5.8/66.4
R110	7030003270	S.RES ERJ3GEYJ 390 V (39)	B	70.2/87.2
R111	7030003340	S.RES ERJ3GEYJ 151 V (150)	B	71.1/89.5
R112	7030003310	S.RES ERJ3GEYJ 820 V (82)	B	65.4/89.5
R113	7030003320	S.RES ERJ3GEYJ 101 V (100)	B	66.2/87.2
R114	7030003310	S.RES ERJ3GEYJ 820 V (82)	B	67/89.5
R115	7030003340	S.RES ERJ3GEYJ 151 V (150)	B	74.2/75
R116	7030003340	S.RES ERJ3GEYJ 151 V (150)	T	22.1/27
R117	7030003340	S.RES ERJ3GEYJ 151 V (150)	T	21.4/10.2
R118	7030003340	S.RES ERJ3GEYJ 151 V (150)	T	87/75.4
R119	7030003340	S.RES ERJ3GEYJ 151 V (150)	T	92.9/75.3
R151	7030003560	S.RES ERJ3GEYJ 103 V (10K)	T	52.1/83.7
R152	7540000130	ABS 2P-50A-301		
R153	7030003560	S.RES ERJ3GEYJ 103 V (10K)	B	6.5/84.2
R154	7030003680	S.RES ERJ3GEYJ 104 V (100K)	T	47.4/81.2
R155	7030003480	S.RES ERJ3GEYJ 222 V (2.2K)	T	47.6/86.1
R156	7030008180	S.RES ERJ12YJ331U (330)	T	40.9/81.9
R157	7030003680	S.RES ERJ3GEYJ 104 V (100K)	T	47.4/79.4
R161	7540000270	S.ABS ERZVF2M201	T	134.3/83
R162	7030003200	S.RES ERJ3GEYJ 100 V (10)	B	102/80.5
R163	7030003390	S.RES ERJ3GEYJ 391 V (390)	T	140.5/85.4
R201	7030003400	S.RES ERJ3GEYJ 471 V (470)	T	5.8/17
R202	7030003200	S.RES ERJ3GEYJ 100 V (10)	T	3.9/17.5
R203	7030003400	S.RES ERJ3GEYJ 471 V (470)	T	5.8/18.2
R207	7030003220	S.RES ERJ3GEYJ 150 V (15)	T	7.4/25.8
R208	7030003560	S.RES ERJ3GEYJ 103 V (10K)	T	8.9/37.3
R209	7030003380	S.RES ERJ3GEYJ 331 V (330)	T	3.8/40.7
R210	7030003220	S.RES ERJ3GEYJ 150 V (15)	T	6/42.2
R211	7030003380	S.RES ERJ3GEYJ 331 V (330)	T	3.8/42.5
R212	7030003350	S.RES ERJ3GEYJ 181 V (180)	T	4.1/44.5
R213	7030003680	S.RES ERJ3GEYJ 104 V (100K)	T	7.6/37.6
R251	7030003680	S.RES ERJ3GEYJ 104 V (100K)	B	8/76.9
R301	7030003560	S.RES ERJ3GEYJ 103 V (10K)	T	28.6/4.6
R302	7030003560	S.RES ERJ3GEYJ 103 V (10K)	T	25.2/6.4
R303	7030003560	S.RES ERJ3GEYJ 103 V (10K)	B	26.6/5.8
R304	7030003560	S.RES ERJ3GEYJ 103 V (10K)	B	24.7/7.9
R305	7030003560	S.RES ERJ3GEYJ 103 V (10K)	T	22.9/7.7
R306	7030003560	S.RES ERJ3GEYJ 103 V (10K)	B	25/12.7
R307	7030003560	S.RES ERJ3GEYJ 103 V (10K)	T	28.4/30.5
R308	7030003560	S.RES ERJ3GEYJ 103 V (10K)	T	27.9/32.4
R309	7030003560	S.RES ERJ3GEYJ 103 V (10K)	B	21.2/33
R310	7030003560	S.RES ERJ3GEYJ 103 V (10K)	T	19.8/29.2

M.=Mounted side (T: Mounted on the Top side, B: Mounted on the Bottom side)
S.=Surface mount

[RF UNIT]

REF NO.	PARTS NO.	DESCRIPTION	M.	H/V LOCATION
R311	7030003560	S.RES ERJ3GEYJ 103 V (10K)	T	26/13.8
R312	7030003560	S.RES ERJ3GEYJ 103 V (10K)	T	19.8/27.2
R313	7030003560	S.RES ERJ3GEYJ 103 V (10K)	T	26/15.3
R314	7030003560	S.RES ERJ3GEYJ 103 V (10K)	T	37.1/10.4
R315	7030003560	S.RES ERJ3GEYJ 103 V (10K)	T	46.2/8.6
R316	7030003560	S.RES ERJ3GEYJ 103 V (10K)	T	42.4/7.1
R360	7030003860	S.RES ERJ3GE JPW V	B	24.6/4.7
R361	7030003860	S.RES ERJ3GE JPW V	B	19.5/29.3
R362	7030003860	S.RES ERJ3GE JPW V	B	46/11.7
R451	7030004050	S.RES ERJ3GEYJ 1R0 V (1)	T	147.5/13.4
R452	7030004050	S.RES ERJ3GEYJ 1R0 V (1)	T	146.3/13.4
R501	7030003320	S.RES ERJ3GEYJ 101 V (100)	T	18.4/64.8
R502	7030003320	S.RES ERJ3GEYJ 101 V (100)	T	17.7/41.5
R551	7030003320	S.RES ERJ3GEYJ 101 V (100)	T	37.6/71.6
R552	7030003320	S.RES ERJ3GEYJ 101 V (100)	T	37.7/46.2
R601	7030003320	S.RES ERJ3GEYJ 101 V (100)	T	27.9/71.3
R602	7030003320	S.RES ERJ3GEYJ 101 V (100)	T	28/46.4
R651	7030003320	S.RES ERJ3GEYJ 101 V (100)	T	46.8/67.5
R652	7030003320	S.RES ERJ3GEYJ 101 V (100)	T	46.9/45.7
R701	7030003320	S.RES ERJ3GEYJ 101 V (100)	B	42.2/66.4
R702	7030003320	S.RES ERJ3GEYJ 101 V (100)	B	41.4/50
R751	7030003320	S.RES ERJ3GEYJ 101 V (100)	B	31.8/70.1
R752	7030003860	S.RES ERJ3GE JPW V	B	35.6/67.7
R753	7030003860	S.RES ERJ3GE JPW V	B	32.9/56.7
R754	7030003320	S.RES ERJ3GEYJ 101 V (100)	B	38/49
R801	7030003320	S.RES ERJ3GEYJ 101 V (100)	T	26.3/37.4
R802	7030003860	S.RES ERJ3GE JPW V	T	26.3/36
R803	7030003320	S.RES ERJ3GEYJ 101 V (100)	T	28.9/37.4
R851	7030003320	S.RES ERJ3GEYJ 101 V (100)	B	29.4/65.8
R852	7030003320	S.RES ERJ3GEYJ 101 V (100)	B	28.5/52
R901	7030009220	S.RES ERJ12YJ561U	B	46.5/30.2
R902	7030003320	S.RES ERJ3GEYJ 101 V (100)	T	54.5/17.8
R951	7030003640	S.RES ERJ3GEYJ 473 V (47K)	T	52.1/30.7
R952	7030003650	S.RES ERJ3GEYJ 563 V (56K)	T	48.4/27.8
R953	7030003570	S.RES ERJ3GEYJ 123 V (12K)	T	48.4/30.4
R954	7030003480	S.RES ERJ3GEYJ 222 V (2.2K)	T	49.6/27.8
R971	7030008180	S.RES ERJ12YJ331U (330)	B	32/41.7
R972	7030009220	S.RES ERJ12YJ561U	B	32/37.5
R1001	7030003270	S.RES ERJ3GEYJ 390 V (39)	T	66.7/30.8
R1002	7030003400	S.RES ERJ3GEYJ 471 V (470)	B	85.9/29.6
R1003	7030003400	S.RES ERJ3GEYJ 471 V (470)	T	87.2/29.7
R1004	7030003400	S.RES ERJ3GEYJ 471 V (470)	T	87.2/24.5
R1005	7030003400	S.RES ERJ3GEYJ 471 V (470)	B	85.9/22.6
R1006	7310004650	S.TRI EVM-2WSX80 B53 (502)	T	87.2/27.7
R1007	7310004650	S.TRI EVM-2WSX80 B53 (502)	T	92.1/27.7
R1008	7030003320	S.RES ERJ3GEYJ 101 V (100)	B	94.4/36.4
R1009	7030003320	S.RES ERJ3GEYJ 101 V (100)	B	95.5/21.8
R1010	7030003360	S.RES ERJ3GEYJ 221 V (220)	B	97.8/27.7
R1011	7030003480	S.RES ERJ3GEYJ 222 V (2.2K)	T	105.8/31.1
R1012	7030003460	S.RES ERJ3GEYJ 152 V (1.5K)	T	103.2/31.2
R1013	7030003440	S.RES ERJ3GEYJ 102 V (1K)	T	102.1/33
R1014	7030003220	S.RES ERJ3GEYJ 150 V (15)	T	109.3/24.2
R1015	7030003560	S.RES ERJ3GEYJ 103 V (10K)	T	104.8/32.9
R1016	7030003250	S.RES ERJ3GEYJ 270 V (27)	T	111.5/24.9
R1017	7030003420	S.RES ERJ3GEYJ 681 V (680)	T	112.6/18.3
R1018	7030003480	S.RES ERJ3GEYJ 222 V (2.2K)	T	112.6/17.1
R1019	7030003400	S.RES ERJ3GEYJ 471 V (470)	T	111.7/15.9
R1020	7030003320	S.RES ERJ3GEYJ 101 V (100)	T	118/38
R1021	7030003200	S.RES ERJ3GEYJ 100 V (10)	T	110.8/22.8
R1101	7030007860	S.RES ERJ3GEYJ 8R2V (8.2)	T	95.9/19.5
R1102	7030003340	S.RES ERJ3GEYJ 151 V (150)	T	94.7/18.3
R1103	7030007860	S.RES ERJ3GEYJ 8R2V (8.2)	T	94.7/21
R1104	7030004040	S.RES ERJ3GEYJ 4R7 V (4.7)	T	79.9/16.5
R1106	7030003420	S.RES ERJ3GEYJ 681 V (680)	T	76.1/18.5
R1107	7030003450	S.RES ERJ3GEYJ 122 V (1.2K)	T	76.2/20.9
R1108	7030003380	S.RES ERJ3GEYJ 331 V (330)	T	83.9/21.6
R1201	7030003270	S.RES ERJ3GEYJ 390 V (39)	T	66.6/46.7
R1202	7030003400	S.RES ERJ3GEYJ 471 V (470)	B	85.8/52.6
R1203	7030003400	S.RES ERJ3GEYJ 471 V (470)	T	86.3/50.5
R1204	7030003400	S.RES ERJ3GEYJ 471 V (470)	T	86.3/44.5
R1205	7030003400	S.RES ERJ3GEYJ 471 V (470)	B	86.2/43.8
R1206	7310004650	S.TRI EVM-2WSX80 B53 (502)	T	87/48.2
R1207	7310004650	S.TRI EVM-2WSX80 B53 (502)	T	92/48.2
R1208	7030003320	S.RES ERJ3GEYJ 101 V (100)	B	92.4/40.2
R1209	7030003320	S.RES ERJ3GEYJ 101 V (100)	B	91.8/53.2
R1210	7030003360	S.RES ERJ3GEYJ 221 V (220)	B	101.3/47.8
R1212	7030003480	S.RES ERJ3GEYJ 222 V (2.2K)	B	103.9/57.2
R1213	7030003480	S.RES ERJ3GEYJ 222 V (2.2K)	T	103.3/52.8
R1214	7030003460	S.RES ERJ3GEYJ 152 V (1.5K)	T	105.2/53.4
R1215	7030003440	S.RES ERJ3GEYJ 102 V (1K)	T	103.3/54
R1216	7030003220	S.RES ERJ3GEYJ 150 V (15)	T	110.1/47.4
R1217	7030003560	S.RES ERJ3GEYJ 103 V (10K)	T	103.6/56.7
R1218	7030003250	S.RES ERJ3GEYJ 270 V (27)	T	110.8/45.5
R1219	7030003420	S.RES ERJ3GEYJ 681 V (680)	T	107.8/56.2
R1220	7030003480	S.RES ERJ3GEYJ 222 V (2.2K)	T	105.9/55.2
R1221	7030003400	S.RES ERJ3GEYJ 471 V (470)	T	112.1/49.6
R1222	7030003280	S.RES ERJ3GEYJ 470 V (47)	B	100.5/52.3
R1223	7030003530	S.RES ERJ3GEYJ 562 V (5.6K)	B	95/56.1
R1224	7030003440	S.RES ERJ3GEYJ 102 V (1K)	B	91.2/56.5
R1225	7030003200	S.RES ERJ3GEYJ 100 V (10)	T	112.1/46.7
R1226	7030003520	S.RES ERJ3GEYJ 472 V (4.7K)	T	99.1/57
R1229	7030003400	S.RES ERJ3GEYJ 471 V (470)	B	108.9/56.1
R1301	7030007860	S.RES ERJ3GEYJ 8R2V (8.2)	T	94.3/62
R1302	7030003340	S.RES ERJ3GEYJ 151 V (150)	T	95.6/62
R1303	7030007860	S.RES ERJ3GEYJ 8R2V (8.2)	T	95.6/59.3
R1304	7030003440	S.RES ERJ3GEYJ 102 V (1K)	T	94/58.8
R1305	7030004040	S.RES ERJ3GEYJ 4R7 V (4.7)	T	73.9/59.2
R1307	7030003420	S.RES ERJ3GEYJ 681 V (680)	T	79.9/61.6
R1308	7030003450	S.RES ERJ3GEYJ 122 V (1.2K)	T	79.9/63.1
R1309	7030003380	S.RES ERJ3GEYJ 331 V (330)	T	72.3/63.1
R1401	7030003340	S.RES ERJ3GEYJ 151 V (150)	T	50.7/35.2
R1402	7030003270	S.RES ERJ3GEYJ 390 V (39)	T	50.7/36.4
R1403	7030003340	S.RES ERJ3GEYJ 151 V (150)	T	52.6/36.3
R1404	7030003320	S.RES ERJ3GEYJ 101 V (100)	T	54.5/36.9

[RF UNIT]

REF NO.	PARTS NO.	DESCRIPTION	M.	H/V LOCATION
R1405	7030003320	S.RES ERJ3GEYJ 101 V (100)	T	54.8/50.5
R1406	7030003200	S.RES ERJ3GEYJ 100 V (10)	T	51.4/43.1
R1451	7030003430	S.RES ERJ3GEYJ 821 V (820)	B	91.1/73.8
R1452	7030003430	S.RES ERJ3GEYJ 821 V (820)	B	88.4/73.8
R1453	7030004030	S.RES ERJ3GEYJ 5R6 V (5.6)	B	86.8/69.4
R1454	7030003430	S.RES ERJ3GEYJ 821 V (820)	B	88.6/69.4
R1502	7030003480	S.RES ERJ3GEYJ 222 V (2.2K)	T	100.4/69.4
R1503	7030003290	S.RES ERJ3GEYJ 560 V (56)	T	97.6/70.5
R1504	7030003480	S.RES ERJ3GEYJ 222 V (2.2K)	T	95.8/68.6
R1552	7030003320	S.RES ERJ3GEYJ 101 V (100)	B	118.8/69.9
R1553	7510001491	S.THE NTCG16 3NH 681JT	B	121.1/66.7
R1554	7030003480	S.RES ERJ3GEYJ 222 V (2.2K)	B	122.4/66.7
R1555	7030003440	S.RES ERJ3GEYJ 102 V (1K)	B	125/69
R1556	7030003340	S.RES ERJ3GEYJ 151 V (150)	B	127.5/68.2
R1557	7030004040	S.RES ERJ3GEYJ 4R7 V (4.7)	B	127.7/71
R1558	7030003440	S.RES ERJ3GEYJ 102 V (1K)	B	129.1/63.5
R1601	7030003480	S.RES ERJ3GEYJ 222 V (2.2K)	T	120.8/27.8
R1602	7030003280	S.RES ERJ3GEYJ 470 V (47)	T	128.1/35.2
R1603	7030003280	S.RES ERJ3GEYJ 470 V (47)	T	129/32.7
R1604	7030003480	S.RES ERJ3GEYJ 222 V (2.2K)	T	120.8/26.6
R1701	7030003400	S.RES ERJ3GEYJ 471 V (470)	B	145.5/42.7
R1702	7030003440	S.RES ERJ3GEYJ 102 V (1K)	B	156/43.2
R1703	7030003440	S.RES ERJ3GEYJ 102 V (1K)	B	127.8/38.6
R1704	7030003440	S.RES ERJ3GEYJ 102 V (1K)	T	138/37.5
R1705	7030003440	S.RES ERJ3GEYJ 102 V (1K)	B	141.5/73.4
R1706	7030003440	S.RES ERJ3GEYJ 102 V (1K)	B	130.6/75.2
R1707	7030003440	S.RES ERJ3GEYJ 102 V (1K)	B	150.2/73.1
R1708	7030003400	S.RES ERJ3GEYJ 471 V (470)	B	144.4/78
R1901	7030003560	S.RES ERJ3GEYJ 103 V (10K)	T	128.2/28.1
R2001	7030003440	S.RES ERJ3GEYJ 102 V (1K)	T	103/72.8
R2002	7030003200	S.RES ERJ3GEYJ 100 V (10)	T	105.2/73.4
R2003	7030003600	S.RES ERJ3GEYJ 223 V (22K)	T	103/74.1
R2004	7030003340	S.RES ERJ3GEYJ 151 V (150)	T	106.9/78.2
R2005	7030003280	S.RES ERJ3GEYJ 470 V (47)	T	103/75.7
C101	4030007090	S.CER C1608 CH 1H 470J-T	T	41/91.7
C102	4030007030	S.CER C1608 CH 1H 150J-T	T	43.6/90.2
C103	4030007120	S.CER C1608 CH 1H 820J-T	T	39.8/91.7
C104	4030009560	S.CER C1608 CH 1H R75B-T	T	42.1/89.1
C105	4030007070	S.CER C1608 CH 1H 330J-T	T	38.6/91.7
C106	4030019320	S.CER C1608 X7R 1C 105K-T	T	37.2/89.4
C108	4030006930	S.CER C1608 CH 1H 020C-T	B	82.8/75.3
C109	4030007050	S.CER C1608 CH 1H 220J-T	B	84.4/75.3
C110	4030019320	S.CER C1608 X7R 1C 105K-T	T	14.1/80.3
C111	4030011600	S.CER C1608 JB 1E 104K-T	T	9.4/70
C112	4030011600	S.CER C1608 JB 1E 104K-T	T	8.4/65.9
C113	4030010760	S.CER C1608 CH 1H 331J-T	B	83.3/70
C114	4030006900	S.CER C1608 JB 1H 103K-T	T	57.9/78
C115	4030006900	S.CER C1608 JB 1H 103K-T	T	70.4/75.4
C116	4030006900	S.CER C1608 JB 1H 103K-T	B	75.8/75
C117	4030006900	S.CER C1608 JB 1H 103K-T	B	88/76
C118	4030006900	S.CER C1608 JB 1H 103K-T	B	96.6/75.3
C151	4030011600	S.CER C1608 JB 1E 104K-T	T	49.5/86.8
C152	4030011600	S.CER C1608 JB 1E 104K-T	T	43.5/84
C153	4030011600	S.CER C1608 JB 1E 104K-T	T	52.1/82.5
C154	4030011600	S.CER C1608 JB 1E 104K-T	T	44/85.8
C155	4030011600	S.CER C1608 JB 1E 104K-T	T	48.6/79.4
C161	4030006900	S.CER C1608 JB 1H 103K-T	B	96.6/90.6
C163	4030006900	S.CER C1608 JB 1H 103K-T	B	108.9/83.4
C164	4030006900	S.CER C1608 JB 1H 103K-T	B	113/80.9
C165	4030019540	S.CER GRM31BR72J472KW01L	B	122.2/86.7
C201	4030007010	S.CER C1608 CH 1H 100D-T	T	7.3/20.3
C202	4030007120	S.CER C1608 CH 1H 820J-T	T	7.3/21.5
C203	4030007020	S.CER C1608 CH 1H 120J-T	T	5.5/22.2
C204	4030007120	S.CER C1608 CH 1H 820J-T	T	7.3/23
C205	4030011600	S.CER C1608 JB 1E 104K-T	T	5.5/24.8
C206	4030011600	S.CER C1608 JB 1E 104K-T	T	4.6/29.8
C207	4030011600	S.CER C1608 JB 1E 104K-T	T	8.9/39.9
C208	4030011600	S.CER C1608 JB 1E 104K-T	T	6/39.6
C209	4030011600	S.CER C1608 JB 1E 104K-T	T	2.9/39
C210	4030011600	S.CER C1608 JB 1E 104K-T	T	7.3/24.5
C251	4030011600	S.CER C1608 JB 1E 104K-T	B	13.6/72.5
C252	4030011600	S.CER C1608 JB 1E 104K-T	B	9.8/76.1
C271	4030018600	S.CER C1608 CH 1H 152J-T	T	8.9/80.1
C272	4030018590	S.CER C1608 CH 1H 122J-T	T	8.9/78.9
C273	4030018620	S.CER C1608 CH 1H 222J-T	T	10.5/77
C274	4030018620	S.CER C1608 CH 1H 222J-T	T	12/77
C275	4030018620	S.CER C1608 CH 1H 222J-T	T	13.5/77
C276	4030018600	S.CER C1608 CH 1H 152J-T	T	16/77.5
C301	4030011600	S.CER C1608 JB 1E 104K-T	T	42.2/17.8
C302	4030011600	S.CER C1608 JB 1E 104K-T	B	35/28.7
C303	4030011600	S.CER C1608 JB 1E 104K-T	B	28.4/25.5
C304	4030011600	S.CER C1608 JB 1E 104K-T	T	38.5/10.4
C330	4030011600	S.CER C1608 JB 1E 104K-T	B	112.5/58.2
C332	4510008540	S.ELE EEE1CA100SR	T	106.8/61.9
C334	4030011600	S.CER C1608 JB 1E 104K-T	B	114.3/58.9
C451	4030011600	S.CER C1608 JB 1E 104K-T	B	149.6/15.8
C452	4030018960	S.CER C3216 JB 1C 106MT-N	T	157.3/14.8
C453	4030011600	S.CER C1608 JB 1E 104K-T	B	149.6/17.8
C454	4030019500	S.CER GRM21BB31A106KE18 (GRM40 B)	B	145.6/16.1
C455	4030011600	S.CER C1608 JB 1E 104K-T	B	150.6/26.5
C456	4030019500	S.CER GRM21BB31A106KE18 (GRM40 B)	B	150.4/24.5
C457	4030007130	S.CER C1608 CH 1H 101J-T	B	149.5/35.8
C458	4030007130	S.CER C1608 CH 1H 101J-T	B	153.4/34.8
C459	4030007130	S.CER C1608 CH 1H 101J-T	B	149.5/33.8
C460	4030007130	S.CER C1608 CH 1H 101J-T	B	153.5/32.8
C461	4030017810	S.CER C1608 CH 1H 102J-T	B	149.6/31.8
C462	4030017810	S.CER C1608 CH 1H 102J-T	B	153.5/30.8
C463	4030017810	S.CER C1608 CH 1H 102J-T	B	149.6/29.8
C464	4030017810	S.CER C1608 CH 1H 102J-T	B	145.5/28.5
C465	4030017810	S.CER C1608 CH 1H 102J-T	B	154.1/28.4

M.=Mounted side (T: Mounted on the Top side, B: Mounted on the Bottom side)
S.=Surface mount

[RF UNIT]

REF NO.	PARTS NO.	DESCRIPTION	M.	H/V LOCATION
C466	4030007130	S.CER C1608 CH 1H 101J-T	B	149.6/21.8
C467	4030017810	S.CER C1608 CH 1H 102J-T	B	149.7/19.8
C468	4030011600	S.CER C1608 JB 1E 104K-T	B	153.5/18.8
C469	4510008510	S.ELE EEE1CA471P	T	141.8/7.4
C470	4030011600	S.CER C1608 JB 1E 104K-T	B	141.2/17.8
C471	4030017810	S.CER C1608 CH 1H 102J-T	B	158.6/17.1
C472	4030017810	S.CER C1608 CH 1H 102J-T	B	141.4/19.8
C473	4030007130	S.CER C1608 CH 1H 101J-T	B	141.4/21.8
C474	4030011600	S.CER C1608 JB 1E 104K-T	B	158/25.5
C475	4030017810	S.CER C1608 CH 1H 102J-T	B	158.7/28.1
C476	4030017810	S.CER C1608 CH 1H 102J-T	B	141.4/27.8
C477	4030017810	S.CER C1608 CH 1H 102J-T	B	141.5/29.8
C478	4030017810	S.CER C1608 CH 1H 102J-T	B	158.6/32
C479	4030017810	S.CER C1608 CH 1H 102J-T	B	141.3/31.8
C480	4030007130	S.CER C1608 CH 1H 101J-T	B	153.5/22.7
C481	4030007130	S.CER C1608 CH 1H 101J-T	B	157.9/21.9
C501	4030007170	S.CER C1608 CH 1H 221J-T	T	17.4/68.6
C502	4030011600	S.CER C1608 JB 1E 104K-T	T	18.2/66.6
C503	4030007110	S.CER C1608 CH 1H 680J-T	T	18.6/68.6
C504	4030007090	S.CER C1608 CH 1H 470J-T	T	19.3/59.1
C505	4030007090	S.CER C1608 CH 1H 470J-T	T	19.3/57.9
C506	4030007070	S.CER C1608 CH 1H 330J-T	T	16.1/57.2
C507	4030007070	S.CER C1608 CH 1H 330J-T	T	17.3/57.2
C508	4030007090	S.CER C1608 CH 1H 470J-T	T	19.3/56.4
C509	4030007090	S.CER C1608 CH 1H 470J-T	T	19.3/55.2
C510	4030007070	S.CER C1608 CH 1H 330J-T	T	12.4/51.8
C511	4030007070	S.CER C1608 CH 1H 330J-T	T	13.6/51.8
C512	4030007090	S.CER C1608 CH 1H 470J-T	T	18.2/52.6
C513	4030007090	S.CER C1608 CH 1H 470J-T	T	18.2/51.4
C514	4030007170	S.CER C1608 CH 1H 221J-T	T	18.2/47.7
C515	4030011600	S.CER C1608 JB 1E 104K-T	T	19.7/45
C516	4030007110	S.CER C1608 CH 1H 680J-T	T	18.2/46.4
C551	4030007160	S.CER C1608 CH 1H 181J-T	T	38.1/73.6
C552	4030011600	S.CER C1608 JB 1E 104K-T	T	37.4/67.8
C553	4030007090	S.CER C1608 CH 1H 470J-T	T	36.8/73.6
C554	4030007040	S.CER C1608 CH 1H 180J-T	T	39/63.9
C555	4030007090	S.CER C1608 CH 1H 470J-T	T	39/62.6
C556	4030007050	S.CER C1608 CH 1H 220J-T	T	37.1/61.9
C557	4030007030	S.CER C1608 CH 1H 150J-T	T	35.9/61.9
C558	4030006990	S.CER C1608 CH 1H 080D-T	T	39/61.1
C559	4030007090	S.CER C1608 CH 1H 470J-T	T	39/59.9
C560	4030007050	S.CER C1608 CH 1H 220J-T	T	31.5/56.1
C561	4030007030	S.CER C1608 CH 1H 150J-T	T	32.8/56.1
C562	4030007040	S.CER C1608 CH 1H 180J-T	T	38.1/56.6
C563	4030007090	S.CER C1608 CH 1H 470J-T	T	38.1/55.3
C564	4030007160	S.CER C1608 CH 1H 181J-T	T	38/50.7
C565	4030011600	S.CER C1608 JB 1E 104K-T	T	39.5/49.4
C566	4030007090	S.CER C1608 CH 1H 470J-T	T	38/52
C601	4030007040	S.CER C1608 CH 1H 180J-T	T	27.2/73.3
C602	4030011600	S.CER C1608 JB 1E 104K-T	T	27.5/67.8
C603	4030007140	S.CER C1608 CH 1H 121J-T	T	28.5/73.3
C604	4030007040	S.CER C1608 CH 1H 180J-T	T	29.4/62.7
C605	4030007070	S.CER C1608 CH 1H 330J-T	T	29.4/63.9
C606	4030007070	S.CER C1608 CH 1H 330J-T	T	26.2/61.9
C607	4030007010	S.CER C1608 CH 1H 100D-T	T	27.5/61.9
C609	4030007090	S.CER C1608 CH 1H 470J-T	T	29.4/59.9
C610	4030007070	S.CER C1608 CH 1H 330J-T	T	21.7/56
C611	4030007010	S.CER C1608 CH 1H 100D-T	T	23/56
C612	4030007040	S.CER C1608 CH 1H 180J-T	T	28.4/56.5
C613	4030007070	S.CER C1608 CH 1H 330J-T	T	28.4/55.2
C614	4030007040	S.CER C1608 CH 1H 180J-T	T	28.4/52.1
C615	4030011600	S.CER C1608 JB 1E 104K-T	T	29.8/49.6
C616	4030007140	S.CER C1608 CH 1H 121J-T	T	28.4/50.8
C651	4030007130	S.CER C1608 CH 1H 101J-T	T	46/73.3
C652	4030011600	S.CER C1608 JB 1E 104K-T	T	46.8/71.3
C653	4030007030	S.CER C1608 CH 1H 150J-T	T	47.2/73.3
C654	4030007050	S.CER C1608 CH 1H 220J-T	T	48.8/63.5
C655	4030007020	S.CER C1608 CH 1H 120J-T	T	48.8/62.2
C656	4030007050	S.CER C1608 CH 1H 220J-T	T	45.5/61.5
C658	4030007050	S.CER C1608 CH 1H 220J-T	T	48.8/60.7
C659	4030006980	S.CER C1608 CH 1H 070D-T	T	48.8/59.5
C660	4030007050	S.CER C1608 CH 1H 220J-T	T	40.9/56
C662	4030007050	S.CER C1608 CH 1H 220J-T	T	47.7/56.8
C663	4030007020	S.CER C1608 CH 1H 120J-T	T	47.7/55.6
C664	4030007130	S.CER C1608 CH 1H 101J-T	T	46.1/49.9
C665	4030011600	S.CER C1608 JB 1E 104K-T	T	47.6/52.3
C666	4030007030	S.CER C1608 CH 1H 150J-T	T	46.1/51.1
C701	4030007100	S.CER C1608 CH 1H 560J-T	B	45.1/69.2
C702	4030011600	S.CER C1608 JB 1E 104K-T	B	44/62.7
C704	4030007110	S.CER C1608 CH 1H 680J-T	B	47.7/62.3
C706	4030007100	S.CER C1608 CH 1H 560J-T	B	44.6/51.7
C707	4030011600	S.CER C1608 JB 1E 104K-T	B	42.5/58.7
C752	4030011600	S.CER C1608 JB 1E 104K-T	B	32.1/73.9
C756	4030007090	S.CER C1608 CH 1H 470J-T	B	35.6/64.4
C757	4030006990	S.CER C1608 CH 1H 080D-T	B	33.8/64.4
C760	4030007090	S.CER C1608 CH 1H 470J-T	B	35.6/61.1
C765	4030011600	S.CER C1608 JB 1E 104K-T	B	39/52.3
C801	4030011600	S.CER C1608 JB 1E 104K-T	T	28.9/36
C803	4030018600	S.CER C1608 CH 1H 152J-T	T	29.6/39.5
C804	4030018610	S.CER C1608 CH 1H 182J-T	T	28.4/39.5
C805	4030018610	S.CER C1608 CH 1H 182J-T	T	31.5/39.6
C806	4030018600	S.CER C1608 CH 1H 152J-T	T	31.5/37.2
C807	4030018600	S.CER C1608 CH 1H 152J-T	T	31.5/38.4
C808	4030018600	S.CER C1608 CH 1H 152J-T	T	32/41.6
C809	4030018610	S.CER C1608 CH 1H 182J-T	T	33.3/41.6
C810	4030011600	S.CER C1608 JB 1E 104K-T	T	19.6/37.7
C845	4030011770	S.CER C1608 CH 1H 060B-T	B	29.4/62.4
C851	4030007140	S.CER C1608 CH 1H 121J-T	B	25/67
C852	4030011600	S.CER C1608 JB 1E 104K-T	B	28.7/67.4
C853	4030011770	S.CER C1608 CH 1H 060B-T	B	29.4/64
C855	4030009550	S.CER C1608 CH 1H 2R5B-T	B	23.2/61.1
C856	4030009920	S.CER C1608 CH 1H 050B-T	B	25/61.1
C857	4030007010	S.CER C1608 CH 1H 100D-T	B	29.4/57.8
C858	4030009920	S.CER C1608 CH 1H 050B-T	B	23.2/57.8

[RF UNIT]

REF NO.	PARTS NO.	DESCRIPTION	M.	H/V LOCATION
C859	4030009550	S.CER C1608 CH 1H 2R5B-T	B	25/57.8
C860	4030011770	S.CER C1608 CH 1H 060B-T	B	29.4/54.2
C861	4030011770	S.CER C1608 CH 1H 060B-T	B	29.4/56
C862	4030007030	S.CER C1608 CH 1H 150J-T	B	25/52
C863	4030007140	S.CER C1608 CH 1H 121J-T	B	25/47.3
C864	4030011600	S.CER C1608 JB 1E 104K-T	B	29.3/50.1
C901	4030011600	S.CER C1608 JB 1E 104K-T	T	50.1/13.8
C951	4030011600	S.CER C1608 JB 1E 104K-T	T	49.6/30.4
C952	4030007170	S.CER C1608 CH 1H 221J-T	T	48.4/25.2
C971	4030011600	S.CER C1608 JB 1E 104K-T	B	35.7/39.7
C1001	4030007050	S.CER C1608 CH 1H 220J-T	T	66.4/20.6
C1002	4030007140	S.CER C1608 CH 1H 121J-T	T	59.2/22.6
C1004	4030007070	S.CER C1608 CH 1H 330J-T	T	66.4/23
C1005	4030007080	S.CER C1608 CH 1H 390J-T	T	66.4/21.8
C1006	4030007090	S.CER C1608 CH 1H 470J-T	T	59.9/25.3
C1007	4030007080	S.CER C1608 CH 1H 390J-T	T	66.4/24.2
C1008	4030007100	S.CER C1608 CH 1H 560J-T	T	66.4/25.4
C1009	4030007030	S.CER C1608 CH 1H 150J-T	T	64.4/26.6
C1010	4030007100	S.CER C1608 CH 1H 560J-T	T	66.4/26.6
C1011	4030011600	S.CER C1608 JB 1E 104K-T	T	66.4/27.8
C1012	4030007030	S.CER C1608 CH 1H 150J-T	T	73.2/29
C1013	4030011600	S.CER C1608 JB 1E 104K-T	T	73/21.4
C1014	4030007020	S.CER C1608 CH 1H 120J-T	B	86.2/27
C1015	4030011600	S.CER C1608 JB 1E 104K-T	B	85.9/31.4
C1016	4030011600	S.CER C1608 JB 1E 104K-T	T	87.2/30.9
C1017	4030011600	S.CER C1608 JB 1E 104K-T	T	87.2/25.7
C1018	4030011600	S.CER C1608 JB 1E 104K-T	B	85.9/24.4
C1019	4030007030	S.CER C1608 CH 1H 150J-T	T	93.2/30.3
C1020	4030007030	S.CER C1608 CH 1H 150J-T	T	93.1/25.1
C1021	4030011600	S.CER C1608 JB 1E 104K-T	B	101.6/27.7
C1022	4030011340	S.CER C1608 CH 1H 471J-T	T	103.8/24.9
C1023	4030006900	S.CER C1608 JB 1H 103K-T	T	106.4/24.9
C1024	4030011340	S.CER C1608 CH 1H 471J-T	T	105.8/29.9
C1025	4030011600	S.CER C1608 JB 1E 104K-T	T	100.9/33
C1026	4030006900	S.CER C1608 JB 1H 103K-T	T	108.4/29.9
C1027	4030006900	S.CER C1608 JB 1H 103K-T	T	110.1/28.5
C1028	4030006900	S.CER C1608 JB 1H 103K-T	T	110.1/26.5
C1029	4030011600	S.CER C1608 JB 1E 104K-T	T	109.6/33.8
C1030	4030019500	S.CER GRM21BB31A106KE18 (GRM40 B)	B	105.5/31
C1031	4030011600	S.CER C1608 JB 1E 104K-T	T	112.6/19.5
C1032	4030006900	S.CER C1608 JB 1H 103K-T	T	112.5/14.7
C1033	4030011600	S.CER C1608 JB 1E 104K-T	T	108.6/11.6
C1034	4030009530	S.CER C1608 CH 1H 030B-T	T	112.6/20.7
C1035	4030007030	S.CER C1608 CH 1H 150J-T	B	112.6/19.6
C1036	4540000020	S.TRI TZY2Z060A001R00 (TZVY2Z060A110)	T	113.5/22.7
C1037	4030011600	S.CER C1608 JB 1E 104K-T	B	96.2/12.5
C1038	4510008540	S.ELE EEE1CA100SR	T	104.9/14
C1039	4030011600	S.CER C1608 JB 1E 104K-T	B	99.5/12.5
C1040	4030011600	S.CER C1608 JB 1E 104K-T	B	113.7/13.9
C1041	4030009920	S.CER C1608 CH 1H 050B-T	T	114.2/24.8
C1042	4030017810	S.CER C1608 CH 1H 102J-T	B	113.3/30.4
C1101	4030007040	S.CER C1608 CH 1H 180J-T	T	89.6/17
C1102	4030006980	S.CER C1608 CH 1H 070D-T	T	89.6/15.8
C1103	4030008560	S.CER C1608 CH 1H 300J-T	T	87/17
C1104	4030007020	S.CER C1608 CH 1H 120J-T	T	87/15.8
C1105	4030007060	S.CER C1608 CH 1H 270J-T	T	85.2/16.5
C1107	4030006900	S.CER C1608 JB 1H 103K-T	T	77.7/15.3
C1108	4030011600	S.CER C1608 JB 1E 104K-T	T	76.1/12
C1110	4030006900	S.CER C1608 JB 1H 103K-T	T	77.4/20.9
C1111	4030006900	S.CER C1608 JB 1H 103K-T	T	73/20.2
C1201	4030007050	S.CER C1608 CH 1H 220J-T	T	67.1/37.9
C1202	4030007140	S.CER C1608 CH 1H 121J-T	T	63.9/39.9
C1204	4030007070	S.CER C1608 CH 1H 330J-T	T	67.1/40.3
C1205	4030007080	S.CER C1608 CH 1H 390J-T	T	67.1/39.1
C1206	4030007090	S.CER C1608 CH 1H 470J-T	T	61/44.2
C1207	4030007080	S.CER C1608 CH 1H 390J-T	T	67.1/41.5
C1208	4030007100	S.CER C1608 CH 1H 560J-T	T	67.1/42.7
C1209	4030007030	S.CER C1608 CH 1H 150J-T	T	64.9/44.5
C1210	4030007100	S.CER C1608 CH 1H 560J-T	T	67.1/43.9
C1211	4030011600	S.CER C1608 JB 1E 104K-T	T	67.1/45.1
C1212	4030007030	S.CER C1608 CH 1H 150J-T	B	73.8/50.6
C1213	4030011600	S.CER C1608 JB 1E 104K-T	T	72.5/43.3
C1214	4030007020	S.CER C1608 CH 1H 120J-T	B	85.3/48.1
C1215	4030011600	S.CER C1608 JB 1E 104K-T	B	85.8/50.8
C1216	4030011600	S.CER C1608 JB 1E 104K-T	T	86.3/51.7
C1217	4030011600	S.CER C1608 JB 1E 104K-T	T	86.3/45.7
C1218	4030011600	S.CER C1608 JB 1E 104K-T	B	86.2/45.6
C1219	4030007030	S.CER C1608 CH 1H 150J-T	T	93/50.8
C1220	4030007030	S.CER C1608 CH 1H 150J-T	T	93/45.3
C1221	4030011600	S.CER C1608 JB 1E 104K-T	B	97.7/48.2
C1222	4030007040	S.CER C1608 CH 1H 180J-T	B	99.4/60.2
C1223	4030011340	S.CER C1608 CH 1H 471J-T	T	103.9/43.9
C1224	4030006900	S.CER C1608 JB 1H 103K-T	B	104.7/55.5
C1225	4030006900	S.CER C1608 JB 1H 103K-T	T	106.5/43.9
C1226	4030011340	S.CER C1608 CH 1H 471J-T	T	103.9/48.6
C1227	4030011600	S.CER C1608 JB 1E 104K-T	T	103.3/55.2
C1228	4030006900	S.CER C1608 JB 1H 103K-T	T	105.8/49.1
C1229	4030006900	S.CER C1608 JB 1H 103K-T	T	108.9/48.6
C1230	4030006900	S.CER C1608 JB 1H 103K-T	T	109.6/45.5
C1231	4030011600	S.CER C1608 JB 1E 104K-T	T	102.6/60.5
C1232	4030019500	S.CER GRM21BB31A106KE18 (GRM40 B)	T	102.5/64.1
C1233	4030011600	S.CER C1608 JB 1E 104K-T	T	109/56.3
C1234	4030006900	S.CER C1608 JB 1H 103K-T	T	114.5/53.2
C1235	4030011600	S.CER C1608 JB 1E 104K-T	T	111.1/57.2
C1236	4030009530	S.CER C1608 CH 1H 030B-T	T	110.3/54.6
C1237	4030007030	S.CER C1608 CH 1H 150J-T	T	114.5/46.1
C1238	4540000020	S.TRI TZY2Z060A001R00 (TZVY2Z060A110)	T	112.4/53.2
C1239	4030011600	S.CER C1608 JB 1E 104K-T	B	114.8/65.2
C1240	4030007000	S.CER C1608 CH 1H 090D-T	B	102.8/52.1
C1241	4030011600	S.CER C1608 JB 1E 104K-T	B	88.8/59.4

M.=Mounted side (T: Mounted on the Top side, B: Mounted on the Bottom side)
S.=Surface mount

[RF UNIT]

REF NO.	PARTS NO.	DESCRIPTION		M.	H/V LOCATION
C1242	4030011600	S.CER	C1608 JB 1E 104K-T	B	93/55.8
C1243	4030009920	S.CER	C1608 CH 1H 050B-T	T	112.1/44
C1245	4030017810	S.CER	C1608 CH 1H 102J-T	B	106/61.5
C1246	4030007010	S.CER	C1608 CH 1H 100D-T	T	99.1/58.2
C1247	4550007650	S.TAN	F931V105MAABMA	B	106.9/53.5
C1301	4030006900	S.CER	C1608 JB 1H 103K-T	T	96.7/57.5
C1302	4030006900	S.CER	C1608 JB 1H 103K-T	B	102.9/61.2
C1303	4030006900	S.CER	C1608 JB 1H 103K-T	T	96.4/64.1
C1304	4030007040	S.CER	C1608 CH 1H 180J-T	T	92.8/59.7
C1305	4030006980	S.CER	C1608 CH 1H 070D-T	T	91.8/62
C1306	4030008560	S.CER	C1608 CH 1H 300J-T	T	91/58.6
C1307	4030007020	S.CER	C1608 CH 1H 120J-T	T	89.1/59
C1308	4030007060	S.CER	C1608 CH 1H 270J-T	T	91/59.8
C1310	4030006900	S.CER	C1608 JB 1H 103K-T	T	82.2/60.8
C1311	4030011600	S.CER	C1608 JB 1E 104K-T	T	77/58.5
C1313	4030006900	S.CER	C1608 JB 1H 103K-T	T	79.9/64.3
C1314	4030006900	S.CER	C1608 JB 1H 103K-T	B	70.1/61.2
C1400	4030011600	S.CER	C1608 JB 1E 104K-T	T	49.5/46.2
C1401	4030011600	S.CER	C1608 JB 1E 104K-T	T	54.5/38.1
C1402	4030011600	S.CER	C1608 JB 1E 104K-T	T	50.7/37.6
C1403	4030011600	S.CER	C1608 JB 1E 104K-T	T	52.9/41.9
C1404	4030011600	S.CER	C1608 JB 1E 104K-T	T	54.8/42.4
C1405	4030007120	S.CER	C1608 CH 1H 820J-T	T	54/44.3
C1406	4030007040	S.CER	C1608 CH 1H 180J-T	T	51.4/48.6
C1407	4030007130	S.CER	C1608 CH 1H 101J-T	T	54/48.6
C1408	4030007110	S.CER	C1608 CH 1H 680J-T	T	53.6/50.5
C1409	4030007100	S.CER	C1608 CH 1H 560J-T	T	54.1/52.4
C1452	4030009920	S.CER	C1608 CH 1H 050B-T	T	82.6/71
C1453	4030011600	S.CER	C1608 JB 1E 104K-T	B	86/72
C1454	4030011600	S.CER	C1608 JB 1E 104K-T	B	91.1/68.2
C1501	4030006900	S.CER	C1608 JB 1H 103K-T	T	98.4/68.6
C1502	4030006900	S.CER	C1608 JB 1H 103K-T	T	99.7/71.3
C1550	4030017810	S.CER	C1608 CH 1H 102J-T	B	125.1/64.3
C1551	4030007100	S.CER	C1608 CH 1H 560J-T	B	96.3/70.1
C1552	4030006980	S.CER	C1608 CH 1H 070D-T	B	98.7/70.9
C1553	4030007100	S.CER	C1608 CH 1H 560J-T	B	101.1/71
C1556	4030006900	S.CER	C1608 JB 1H 103K-T	B	116.6/66.7
C1557	4030007010	S.CER	C1608 CH 1H 100D-T	B	117.1/69.9
C1558	4030011600	S.CER	C1608 JB 1E 104K-T	B	119.2/67.4
C1559	4030006970	S.CER	C1608 CH 1H 060D-T	B	124/66.7
C1560	4030017810	S.CER	C1608 CH 1H 102J-T	B	125.9/66.7
C1561	4030017810	S.CER	C1608 CH 1H 102J-T	B	129.1/68.7
C1563	4030017810	S.CER	C1608 CH 1H 102J-T	B	124.9/58.9
C1601	4030007170	S.CER	C1608 CH 1H 221J-T	T	130.3/33.1
C1603	4030006900	S.CER	C1608 JB 1H 103K-T	T	127.4/32.7
C1604	4030006900	S.CER	C1608 JB 1H 103K-T	T	128.2/30.7
C1651	4030009920	S.CER	C1608 CH 1H 050B-T	B	125.8/25.4
C1701	4030006900	S.CER	C1608 JB 1H 103K-T	B	128.3/30.2
C1704	4030006900	S.CER	C1608 JB 1H 103K-T	B	149.7/84.4
C1705	4030006900	S.CER	C1608 JB 1H 103K-T	B	159/43.2
C1706	4030006900	S.CER	C1608 JB 1H 103K-T	B	127.6/35.4
C1707	4030006900	S.CER	C1608 JB 1H 103K-T	T	140.2/36.7
C1708	4030006900	S.CER	C1608 JB 1H 103K-T	B	138.1/71.3
C1709	4030006900	S.CER	C1608 JB 1H 103K-T	B	130.6/71
C1710	4030006900	S.CER	C1608 JB 1H 103K-T	B	147.2/73.1
C1901	4030011600	S.CER	C1608 JB 1E 104K-T	T	128.2/29.5
C2001	4030006900	S.CER	C1608 JB 1H 103K-T	T	104.5/71.4
C2002	4030011600	S.CER	C1608 JB 1E 104K-T	T	103/77.1
C2003	4030006900	S.CER	C1608 JB 1H 103K-T	T	109.7/77
C9001	4030006900	S.CER	C1608 JB 1H 103K-T	T	4.6/59.4
C9002	4030006900	S.CER	C1608 JB 1H 103K-T	T	7.4/59.4
C9007	4030006900	S.CER	C1608 JB 1H 103K-T	T	42/38.9
C9008	4030006900	S.CER	C1608 JB 1H 103K-T	T	42/36.1
C9011	4030006900	S.CER	C1608 JB 1H 103K-T	T	26/82.4
C9012	4030006900	S.CER	C1608 JB 1H 103K-T	T	26/79.6
C9015	4030006900	S.CER	C1608 JB 1H 103K-T	T	54.6/67.5
C9016	4030006900	S.CER	C1608 JB 1H 103K-T	T	57.4/67.5
C9018	4030006900	S.CER	C1608 JB 1H 103K-T	T	20.6/17.5
C9020	4030006900	S.CER	C1608 JB 1H 103K-T	T	23.4/17.5
C9021	4030006900	S.CER	C1608 JB 1H 103K-T	T	49.4/17.5
C9024	4030006900	S.CER	C1608 JB 1H 103K-T	T	46.6/17.5
C9026	4030006900	S.CER	C1608 JB 1H 103K-T	T	44.1/42.9
C9027	4030006900	S.CER	C1608 JB 1H 103K-T	T	44.1/40.1
C9031	4030006900	S.CER	C1608 JB 1H 103K-T	T	154.9/54.3
C9035	4030006900	S.CER	C1608 JB 1H 103K-T	T	142.9/62.7
C9036	4030006900	S.CER	C1608 JB 1H 103K-T	T	146.3/62.7
C9061	4030006900	S.CER	C1608 JB 1H 103K-T	T	150.6/77.8
C9062	4030006900	S.CER	C1608 JB 1H 103K-T	T	149/74.4
C9065	4030006900	S.CER	C1608 JB 1H 103K-T	T	148.9/42.2
C9066	4030006900	S.CER	C1608 JB 1H 103K-T	T	150.6/38.8
C9071	4030006900	S.CER	C1608 JB 1H 103K-T	T	137.9/77.8
C9072	4030006900	S.CER	C1608 JB 1H 103K-T	T	137.9/74.4
C9075	4030006900	S.CER	C1608 JB 1H 103K-T	T	137.9/42.2
C9076	4030006900	S.CER	C1608 JB 1H 103K-T	T	136.1/38.8
C9081	4030006900	S.CER	C1608 JB 1H 103K-T	T	125.2/77.8
C9082	4030006900	S.CER	C1608 JB 1H 103K-T	T	125.2/74.4
C9085	4030006900	S.CER	C1608 JB 1H 103K-T	T	125.2/42.2
C9086	4030006900	S.CER	C1608 JB 1H 103K-T	T	125.2/38.8
RL101	6330001860	REL	UA2-12NU		
RL102	6330001860	REL	UA2-12NU		
RL103	6330001860	REL	UA2-12NU		
RL104	6330001860	REL	UA2-12NU		
RL105	6330001860	REL	UA2-12NU		
RL161	6330000540	REL	2-1419131-2(OMR-109F)		
J101	6510007020	CON	TMP-J01X-V6		
J102	6450001130	CON	JPJ2042-01-110		
J103	6450001800	CON	JPJ1044-01-010		
J161	6450001130	CON	JPJ2042-01-110		
J201	6510007020	CON	TMP-J01X-V6		
J451	6510022581	S.CON	24FMN-BMTTR-A-TBT(LF)(SN)	T	151.7/24.3

[RF UNIT]

REF NO.	PARTS NO.	DESCRIPTION		M.	H/V LOCATION
J801	6910016430	CON	IMSA-9210B-1-05Z869-PT1		
J802	6910016430	CON	IMSA-9210B-1-05Z869-PT1		
J803	6910016430	CON	IMSA-9210B-1-05Z869-PT1		
J804	6910016430	CON	IMSA-9210B-1-05Z869-PT1		
J805	6910016430	CON	IMSA-9210B-1-05Z869-PT1		
J807	6910016430	CON	IMSA-9210B-1-05Z869-PT1		
J809	6910016430	CON	IMSA-9210B-1-05Z869-PT1		
J951	6510007020	CON	TMP-J01X-V6		
J1101	6510007020	CON	TMP-J01X-V6		
J1301	6510007020	CON	TMP-J01X-V6		
J1651	6510007020	CON	TMP-J01X-V6		
J1701	6510007020	CON	TMP-J01X-V6		
J1702	6910004741	CON	IMSA-9202B-1-03Z041-PT1		
J1703	6910004741	CON	IMSA-9202B-1-03Z041-PT1		
J1704	6910004741	CON	IMSA-9202B-1-03Z041-PT1		
J1705	6910004741	CON	IMSA-9202B-1-03Z041-PT1		
J1706	6910004741	CON	IMSA-9202B-1-03Z041-PT1		
J1707	6910004741	CON	IMSA-9202B-1-03Z041-PT1		
J1708	6910004741	CON	IMSA-9202B-1-03Z041-PT1		
J1709	6910004741	CON	IMSA-9202B-1-03Z041-PT1		
J2001	6510007020	CON	TMP-J01X-V6		
EP451	6910015970	S.BEA	MMZ1608B 301CT-AS	T	145.6/35.8
EP452	6910015970	S.BEA	MMZ1608B 301CT-AS	T	156.3/36.2
EP453	6910015970	S.BEA	MMZ1608B 301CT-AS	T	145.6/33.8
EP454	6910015970	S.BEA	MMZ1608B 301CT-AS	T	157.6/32.8
EP455	6910015970	S.BEA	MMZ1608B 301CT-AS	T	145.6/31.8
EP456	6910015970	S.BEA	MMZ1608B 301CT-AS	T	157.6/30.8
EP457	6910015970	S.BEA	MMZ1608B 301CT-AS	T	145.6/29.8
EP458	6910015970	S.BEA	MMZ1608B 301CT-AS	T	145.6/27.8
EP459	6910015970	S.BEA	MMZ1608B 301CT-AS	T	157.5/26.8
EP460	6910019900	S.BEA	MPZ1608S601AT	T	157.5/24.8
EP461	6910019900	S.BEA	MPZ1608S601AT	T	145.6/21.8
EP462	6910019900	S.BEA	MPZ1608S601AT	T	145.6/19.8
EP463	6910019900	S.BEA	MPZ1608S601AT	T	157.4/18.8
EP464	6910019900	S.BEA	MPZ1608S601AT	T	145.6/17.8
EP465	6910019900	S.BEA	MPZ1608S601AT	T	35.5/7.5
EP466	6910019900	S.BEA	MPZ1608S601AT	T	32.6/4.2
EP467	6910019900	S.BEA	MPZ1608S601AT	T	157.5/22.8
EP1001	6910015970	S.BEA	MMZ1608B 301CT-AS	B	112.5/32.4
EP1009	6910019900	S.BEA	MPZ1608S601AT	T	120.6/9.9
EP1201	6910015970	S.BEA	MMZ1608B 301CT-AS	B	106/63
EP1406	6910015970	S.BEA	MMZ1608B 301CT-AS	T	50.7/44.3
EP1551	6910015970	S.BEA	MMZ1608B 301CT-AS	B	127.5/65.1
EP1701	6910015970	S.BEA	MMZ1608B 301CT-AS	B	158.2/41
EP1702	6910015970	S.BEA	MMZ1608B 301CT-AS	B	129.9/36.2
EP1703	6910015970	S.BEA	MMZ1608B 301CT-AS	T	137.2/35.5
EP1901	6910015970	S.BEA	MMZ1608B 301CT-AS	T	133.6/30
MP1	8930065741	SPR	2590 D-EARTH SPRING-1	B	100.3/94.8
MP2	8930065741	SPR	2590 D-EARTH SPRING-1	B	68.3/94.8
MP3	8930065741	SPR	2590 D-EARTH SPRING-1	B	26.3/94.8

M.=Mounted side (T: Mounted on the Top side, B: Mounted on the Bottom side)
S.=Surface mount

[BPF UNIT]

REF NO.	PARTS NO.	DESCRIPTION	M.	H/V LOCATION
D3201	1750000581	S.DIO 1SV307(TPH3,F)	B	39.6/48.2
D3202	1750000581	S.DIO 1SV307(TPH3,F)	B	48.2/9.2
D3301	1750000581	S.DIO 1SV307(TPH3,F)	B	33.9/45.3
D3302	1750000581	S.DIO 1SV307(TPH3,F)	B	30.9/3.5
D3401	1750000581	S.DIO 1SV307(TPH3,F)	B	21.7/44.3
D3402	1750000581	S.DIO 1SV307(TPH3,F)	B	27.5/5.7
D3501	1750000581	S.DIO 1SV307(TPH3,F)	B	36.5/48.4
D3502	1750000581	S.DIO 1SV307(TPH3,F)	B	40/10.5
D3601	1750000581	S.DIO 1SV307(TPH3,F)	B	26.6/41.6
D3602	1750000581	S.DIO 1SV307(TPH3,F)	B	27.5/3.9
L3201	6180003540	COI SP0406-3R9K-6		
L3202	6180003580	COI SP0406-120K-6		
L3203	6180003580	COI SP0406-120K-6		
L3204	6180003540	COI SP0406-3R9K-6		
L3205	6180003580	COI SP0406-120K-6		
L3301	6180003550	COI SP0406-4R7K-6		
L3302	6180003560	COI SP0406-5R6K-6		
L3303	6180003560	COI SP0406-5R6K-6		
L3304	6180003550	COI SP0406-4R7K-6		
L3305	6180003560	COI SP0406-5R6K-6		
L3401	6180003410	COI SP0406-2R2K-6		
L3402	6180003510	COI SP0406-6R8K-6		
L3403	6180003510	COI SP0406-6R8K-6		
L3404	6180003410	COI SP0406-2R2K-6		
L3405	6180003510	COI SP0406-6R8K-6		
L3501	6180003410	COI SP0406-2R2K-6		
L3502	6180003570	COI SP0406-3R3K-6		
L3503	6180003570	COI SP0406-3R3K-6		
L3504	6180003410	COI SP0406-2R2K-6		
L3505	6180003570	COI SP0406-3R3K-6		
L3601	6180003390	COI SP0406-1R2K-6		
L3602	6180003490	COI SP0406-2R7K-6		
L3603	6180003490	COI SP0406-2R7K-6		
L3604	6180003390	COI SP0406-1R2K-6		
L3605	6180003490	COI SP0406-2R7K-6		
R3201	7030003320	S.RES ERJ3GEYJ 101 V (100)	B	54.2/39.5
R3202	7030003320	S.RES ERJ3GEYJ 101 V (100)	B	56.9/25.8
R3301	7030003320	S.RES ERJ3GEYJ 101 V (100)	B	31.3/39.2
R3302	7030003320	S.RES ERJ3GEYJ 101 V (100)	B	30.2/12.7
R3401	7030003320	S.RES ERJ3GEYJ 101 V (100)	B	6/32.5
R3402	7030003320	S.RES ERJ3GEYJ 101 V (100)	B	6/17.5
R3501	7030003320	S.RES ERJ3GEYJ 101 V (100)	B	47.4/42.4
R3502	7030003320	S.RES ERJ3GEYJ 101 V (100)	B	45.2/23.4
R3601	7030003320	S.RES ERJ3GEYJ 101 V (100)	B	22/40.5
R3602	7030003320	S.RES ERJ3GEYJ 101 V (100)	B	20.2/11.1
C3201	4030017810	S.CER C1608 CH 1H 102J-T	B	53.6/41.5
C3202	4030011600	S.CER C1608 JB 1E 104K-T	B	51/41.6
C3203	4030017810	S.CER C1608 CH 1H 102J-T	B	53.6/43.3
C3204	4030010760	S.CER C1608 CH 1H 331J-T	B	50.4/39.2
C3205	4030007140	S.CER C1608 CH 1H 121J-T	B	50.4/37.4
C3206	4030007160	S.CER C1608 CH 1H 181J-T	B	48/33.6
C3207	4030007060	S.CER C1608 CH 1H 270J-T	B	48/35.4
C3208	4030010760	S.CER C1608 CH 1H 331J-T	B	49.4/31.8
C3209	4030007090	S.CER C1608 CH 1H 470J-T	B	49.4/30
C3210	4030007160	S.CER C1608 CH 1H 181J-T	B	47.9/27.3
C3211	4030007060	S.CER C1608 CH 1H 270J-T	B	49.7/27.3
C3212	4030010760	S.CER C1608 CH 1H 331J-T	B	49.4/24.6
C3213	4030007140	S.CER C1608 CH 1H 121J-T	B	49.4/22.8
C3214	4030017810	S.CER C1608 CH 1H 102J-T	B	53/20.3
C3215	4030011600	S.CER C1608 JB 1E 104K-T	B	53/24.8
C3216	4030017810	S.CER C1608 CH 1H 102J-T	B	53/22.1
C3301	4030017800	S.CER C1608 CH 1H 561J-T	B	29.2/34.8
C3302	4030011600	S.CER C1608 JB 1E 104K-T	B	31.2/31.2
C3303	4030010760	S.CER C1608 CH 1H 331J-T	B	29.2/33
C3304	4030007080	S.CER C1608 CH 1H 390J-T	B	31.2/29.4
C3305	4030010760	S.CER C1608 CH 1H 331J-T	B	31.2/27.6
C3306	4030010760	S.CER C1608 CH 1H 331J-T	B	34.4/25
C3307	4030007100	S.CER C1608 CH 1H 560J-T	B	32.6/25
C3308	4030007090	S.CER C1608 CH 1H 470J-T	B	30/24.4
C3309	4030010760	S.CER C1608 CH 1H 331J-T	B	30/22.6
C3310	4030010760	S.CER C1608 CH 1H 331J-T	B	32.6/21.3
C3311	4030007100	S.CER C1608 CH 1H 560J-T	B	34.4/21.3
C3312	4030007080	S.CER C1608 CH 1H 390J-T	B	30/20.6
C3313	4030010760	S.CER C1608 CH 1H 331J-T	B	31.2/18.8
C3314	4030017800	S.CER C1608 CH 1H 561J-T	B	32.2/12.9
C3315	4030011600	S.CER C1608 JB 1E 104K-T	B	29.3/16.7
C3316	4030010760	S.CER C1608 CH 1H 331J-T	B	34/12.9
C3401	4030011330	S.CER C1608 CH 1H 391J-T	B	10.2/32
C3402	4030011600	S.CER C1608 JB 1E 104K-T	B	10.2/30.2
C3403	4030017800	S.CER C1608 CH 1H 561J-T	B	10.2/33.8
C3404	4030007160	S.CER C1608 CH 1H 181J-T	B	10.2/26.6
C3405	4030007070	S.CER C1608 CH 1H 330J-T	B	10.2/28.4
C3406	4030007120	S.CER C1608 CH 1H 820J-T	B	12.9/27.4
C3407	4030007030	S.CER C1608 CH 1H 150J-T	B	14.7/27.4
C3408	4030007140	S.CER C1608 CH 1H 121J-T	B	11.5/22.8
C3409	4030007100	S.CER C1608 CH 1H 560J-T	B	11.5/24.6
C3410	4030007120	S.CER C1608 CH 1H 820J-T	B	15.9/20.7
C3411	4030007030	S.CER C1608 CH 1H 150J-T	B	14.1/20.7
C3412	4030007160	S.CER C1608 CH 1H 181J-T	B	13.5/16.4
C3413	4030007070	S.CER C1608 CH 1H 330J-T	B	13.5/18.2
C3414	4030011330	S.CER C1608 CH 1H 391J-T	B	13.8/11.3
C3415	4030011600	S.CER C1608 JB 1E 104K-T	B	12/14.7
C3416	4030017800	S.CER C1608 CH 1H 561J-T	B	12/11.3
C3501	4030010760	S.CER C1608 CH 1H 331J-T	B	45.4/42.4
C3502	4030011600	S.CER C1608 JB 1E 104K-T	B	41.8/40.8
C3503	4030007150	S.CER C1608 CH 1H 151J-T	B	43.6/42.4
C3504	4030007060	S.CER C1608 CH 1H 270J-T	B	40.8/38.2
C3505	4030007150	S.CER C1608 CH 1H 151J-T	B	40.8/36.4

[BPF UNIT]

REF NO.	PARTS NO.	DESCRIPTION	M.	H/V LOCATION
C3506	4030007140	S.CER C1608 CH 1H 121J-T	B	38/34.5
C3507	4030007060	S.CER C1608 CH 1H 270J-T	B	38/32.7
C3508	4030007010	S.CER C1608 CH 1H 100D-T	B	39.3/30.9
C3509	4030007150	S.CER C1608 CH 1H 151J-T	B	39.3/29.1
C3510	4030007140	S.CER C1608 CH 1H 121J-T	B	38.8/26.4
C3511	4030007060	S.CER C1608 CH 1H 270J-T	B	40.6/26.4
C3512	4030007060	S.CER C1608 CH 1H 270J-T	B	39.3/23.7
C3513	4030007150	S.CER C1608 CH 1H 151J-T	B	38.8/21.9
C3514	4030010760	S.CER C1608 CH 1H 331J-T	B	42.6/19.6
C3515	4030011600	S.CER C1608 JB 1E 104K-T	B	42.6/23.2
C3516	4030007150	S.CER C1608 CH 1H 151J-T	B	42.6/21.4
C3601	4030007170	S.CER C1608 CH 1H 221J-T	B	20.8/34.8
C3602	4030011600	S.CER C1608 JB 1E 104K-T	B	22/42.4
C3603	4030007170	S.CER C1608 CH 1H 221J-T	B	20.8/33
C3604	4030007130	S.CER C1608 CH 1H 101J-T	B	21.8/29.4
C3605	4030007050	S.CER C1608 CH 1H 220J-T	B	21.8/31.2
C3606	4030007080	S.CER C1608 CH 1H 390J-T	B	22/26.8
C3607	4030007070	S.CER C1608 CH 1H 330J-T	B	23.8/26.8
C3608	4030007120	S.CER C1608 CH 1H 820J-T	B	21.8/22.2
C3609	4030007050	S.CER C1608 CH 1H 220J-T	B	21.8/24
C3610	4030007080	S.CER C1608 CH 1H 390J-T	B	24.4/20.8
C3611	4030007070	S.CER C1608 CH 1H 330J-T	B	26.2/20.8
C3612	4030007130	S.CER C1608 CH 1H 101J-T	B	23/18.2
C3613	4030007050	S.CER C1608 CH 1H 220J-T	B	23/16.4
C3614	4030007170	S.CER C1608 CH 1H 221J-T	B	22.2/11.3
C3615	4030011600	S.CER C1608 JB 1E 104K-T	B	21.5/14.2
C3616	4030007170	S.CER C1608 CH 1H 221J-T	B	24/11.3

M.=Mounted side (T: Mounted on the Top side, B: Mounted on the Bottom side)
S.=Surface mount

[PREAMP UNIT]

REF NO.	PARTS NO.	DESCRIPTION		M.	H/V LOCATION
Q4101	1590003680	S.TRA	KRC402 RTK/P	T	49.4/33.7
Q4102	1590003770	S.TRA	KRA302E-RTK/P	T	47/31.7
Q4201	1530003851	S.TRA	2SC5551F-TD-E	T	43.8/24.4
Q4202	1530003851	S.TRA	2SC5551F-TD-E	T	36.3/12.9
Q4203	1590003770	S.TRA	KRA302E-RTK/P	T	21/10.2
Q4204	1590003770	S.TRA	KRA302E-RTK/P	T	20.5/4.7
Q4205	1590003770	S.TRA	KRA302E-RTK/P	B	45.7/24.5
Q4301	1590003770	S.TRA	KRA302E-RTK/P	T	23.5/25.7
Q4302	1530003851	S.TRA	2SC5551F-TD-E	B	6/18.9
Q4303	1590003770	S.TRA	KRA302E-RTK/P	T	22.7/23.6
Q4304	1590003770	S.TRA	KRA302E-RTK/P	T	18.9/8.4
Q4305	1590003680	S.TRA	KRC402 RTK/P	T	16.6/7.3
D4101	1750000581	S.DIO	1SV307(TPH3,F)	T	41.9/30.8
D4102	1750000581	S.DIO	1SV307(TPH3,F)	T	48.8/26.2
D4201	1750000581	S.DIO	1SV307(TPH3,F)	T	37.8/31.7
D4202	1750000581	S.DIO	1SV307(TPH3,F)	T	44.5/15.9
D4203	1750001320	S.DIO	KDS4148U RTK/P	T	21/7.5
D4301	1750000581	S.DIO	1SV307(TPH3,F)	T	35.1/32.1
D4302	1750000581	S.DIO	1SV307(TPH3,F)	T	48.4/7.4
D4303	1750001320	S.DIO	KDS4148U RTK/P	T	22.4/21.7
L4101	6200003221	S.COI	NLV32T-151J	B	47.5/33
L4201	6200003221	S.COI	NLV32T-151J	T	38/28.6
L4202	6140003800	COI	LR-439		
L4203	6200009060	S.COI	LQH32CN101K23L	T	38.1/17.5
L4204	6200009060	S.COI	LQH32CN101K23L	T	25.4/7.5
L4205	6140003810	COI	LR-440		
L4206	6140003810	COI	LR-440		
L4207	6200009060	S.COI	LQH32CN101K23L	T	31.6/7.5
L4208	6140003800	COI	LR-439		
L4209	6200003221	S.COI	NLV32T-151J	B	42.9/23.1
L4210	6200007780	S.COI	LQW2BHNR12J03L	B	42.4/17.5
L4301	6200003221	S.COI	NLV32T-151J	T	19.2/26.5
L4302	6140004430	COI	LR-500		
L4303	6140003900	COI	LR-489		
L4304	6200009060	S.COI	LQH32CN101K23L	T	15.1/24.1
L4305	6200003221	S.COI	NLV32T-151J	T	17.1/12.4
R4101	7030003280	S.RES	ERJ3GEYJ 470 V (47)	B	42.7/32.3
R4102	7030003280	S.RES	ERJ3GEYJ 470 V (47)	B	44.7/32.3
R4201	7030003280	S.RES	ERJ3GEYJ 470 V (47)	T	34.6/27.7
R4202	7030003280	S.RES	ERJ3GEYJ 470 V (47)	T	41.7/17
R4203	7030003280	S.RES	ERJ3GEYJ 470 V (47)	T	27.5/6.1
R4204	7030003440	S.RES	ERJ3GEYJ 102 V (1K)	T	44.5/19.9
R4205	7030003440	S.RES	ERJ3GEYJ 102 V (1K)	T	41.8/13.1
R4206	7030003490	S.RES	ERJ3GEYJ 272 V (2.7K)	T	41.8/18.8
R4207	7030003490	S.RES	ERJ3GEYJ 272 V (2.7K)	T	39.9/15
R4208	7030003280	S.RES	ERJ3GEYJ 470 V (47)	B	41.6/19.7
R4209	7030003220	S.RES	ERJ3GEYJ 150 V (15)	B	37.2/23.6
R4210	7030003220	S.RES	ERJ3GEYJ 150 V (15)	B	28.7/15.2
R4213	7030003280	S.RES	ERJ3GEYJ 470 V (47)	T	40.6/21.4
R4214	7030003280	S.RES	ERJ3GEYJ 470 V (47)	T	33.1/12.4
R4301	7030003280	S.RES	ERJ3GEYJ 470 V (47)	T	21.4/28.4
R4302	7030003510	S.RES	ERJ3GEYJ 392 V (3.9K)	B	13.3/25.7
R4303	7030003440	S.RES	ERJ3GEYJ 102 V (1K)	B	13.3/23.3
R4304	7030007860	S.RES	ERJ3GEYJ 8R2V (8.2)	B	1.6/19.3
R4305	7030003240	S.RES	ERJ3GEYJ 220 V (22)	B	11.9/28.7
R4306	7030003280	S.RES	ERJ3GEYJ 470 V (47)	T	15.4/10.3
R4307	7030003200	S.RES	ERJ3GEYJ 100 V (10)	T	14.3/28.6
R4308	7030003280	S.RES	ERJ3GEYJ 470 V (47)	B	5.2/26.4
C4101	4030011600	S.CER	C1608 JB 1E 104K-T	B	47.3/29.4
C4102	4030019320	S.CER	C1608 X7R 1C 105K-T	T	45.4/29.8
C4103	4030011600	S.CER	C1608 JB 1E 104K-T	T	48.4/30
C4104	4030011600	S.CER	C1608 JB 1E 104K-T	T	49.6/31.3
C4201	4030019320	S.CER	C1608 X7R 1C 105K-T	T	30.2/27.7
C4202	4030011600	S.CER	C1608 JB 1E 104K-T	T	44.1/28.3
C4205	4030017490	S.CER	C1608 JB 1A 105K-T	B	33.9/23.6
C4206	4030017490	S.CER	C1608 JB 1A 105K-T	T	26.7/18.8
C4207	4030017490	S.CER	C1608 JB 1A 105K-T	T	46.9/22.8
C4208	4030017490	S.CER	C1608 JB 1A 105K-T	T	40.6/13.1
C4209	4030019320	S.CER	C1608 X7R 1C 105K-T	B	35/18.9
C4210	4030019320	S.CER	C1608 X7R 1C 105K-T	B	26.5/8.1
C4211	4030019320	S.CER	C1608 X7R 1C 105K-T	B	39/16
C4212	4030019320	S.CER	C1608 X7R 1C 105K-T	B	33.5/8.9
C4213	4030017810	S.CER	C1608 CH 1H 102J-T	T	34.1/7.8
C4215	4030019320	S.CER	C1608 X7R 1C 105K-T	B	44/11.5
C4216	4030011600	S.CER	C1608 JB 1E 104K-T	B	43.7/26.4
C4217	4030007110	S.CER	C1608 CH 1H 680J-T	B	44.2/14.1
C4218	4030007110	S.CER	C1608 CH 1H 680J-T	B	42.5/15.6
C4221	4030009510	S.CER	C1608 CH 1H 010B-T	T	42.6/20.7
C4222	4030009510	S.CER	C1608 CH 1H 010B-T	T	38.1/10.1
C4223	4030007010	S.CER	C1608 CH 1H 100D-T	B	38.5/8
C4224	4030017810	S.CER	C1608 CH 1H 102J-T	T	29.6/18.9
C4225	4030017810	S.CER	C1608 CH 1H 102J-T	T	43.3/18.8
C4226	4030017810	S.CER	C1608 CH 1H 102J-T	T	39.4/13.1
C4301	4030011600	S.CER	C1608 JB 1E 104K-T	T	21.4/25.8
C4302	4030019320	S.CER	C1608 X7R 1C 105K-T	T	17.3/29.3
C4303	4030017810	S.CER	C1608 CH 1H 102J-T	B	10.2/24.2
C4304	4030017810	S.CER	C1608 CH 1H 102J-T	B	10.2/27.2
C4305	4030019320	S.CER	C1608 X7R 1C 105K-T	T	11.3/18.5
C4306	4030017490	S.CER	C1608 JB 1A 105K-T	T	14.5/13.3
C4307	4030017810	S.CER	C1608 CH 1H 102J-T	B	11.1/21.1
C4308	4030011600	S.CER	C1608 JB 1E 104K-T	T	18/10.3
C4309	4030006990	S.CER	C1608 CH 1H 080D-T	T	15.5/27.2
C4310	4550006120	S.TAN	TEESVA 0G 226M8R	T	11.6/25.9
C4311	4550006120	S.TAN	TEESVA 0G 226M8R	T	6.7/19.3
C4312	4030017490	S.CER	C1608 JB 1A 105K-T	T	9.8/27.2
C4313	4030017490	S.CER	C1608 JB 1A 105K-T	T	8.2/21.1

[MCF-M UNIT]

REF NO.	PARTS NO.	DESCRIPTION		M.	H/V LOCATION
FI5001	2030000740	S.MON	FL-425 (HF-734A 64.455M BW6K)	T	20/6
L5001	6200012350	S.COI	C2520C-R62G-A	T	8.9/7.6
L5002	6200012350	S.COI	C2520C-R62G-A	T	8.9/4.4
L5003	6200012350	S.COI	C2520C-R62G-A	T	31.2/7.6
L5004	6200012350	S.COI	C2520C-R62G-A	T	31.2/4.4
C5001	4030006900	S.CER	C1608 JB 1H 103K-T	T	6.2/6
C5002	4030007010	S.CER	C1608 CH 1H 100D-T	T	13.6/6.5
C5003	4030007010	S.CER	C1608 CH 1H 100D-T	T	14.9/6.5
C5004	4030007030	S.CER	C1608 CH 1H 150J-T	T	17.9/2.6
C5006	4030007010	S.CER	C1608 CH 1H 100D-T	T	25/5.5
C5007	4030007010	S.CER	C1608 CH 1H 100D-T	T	26.3/5.5
C5008	4030006900	S.CER	C1608 JB 1H 103K-T	T	33.9/6
EP5001	6910002161	CAS	CASE-BM7H-LF		
EP5002	6910002161	CAS	CASE-BM7H-LF		

[MCF-N UNIT]

REF NO.	PARTS NO.	DESCRIPTION		M.	H/V LOCATION
FI6001	2030000750	S.MON	FL-426 (HF-734A 64.455M BW3K)	T	20/6
L6001	6200010960	S.COI	C2520C-R47G-A (0.47U)	T	8.9/7.6
L6002	6200010960	S.COI	C2520C-R47G-A (0.47U)	T	8.9/4.4
L6003	6200010960	S.COI	C2520C-R47G-A (0.47U)	T	31.2/7.6
L6004	6200010960	S.COI	C2520C-R47G-A (0.47U)	T	31.2/4.4
C6001	4030006900	S.CER	C1608 JB 1H 103K-T	T	6.2/6
C6002	4030009990	S.CER	C1608 CH 1H 200J-T	T	13.6/6.5
C6004	4030007030	S.CER	C1608 CH 1H 150J-T	T	17.9/2.6
C6007	4030009990	S.CER	C1608 CH 1H 200J-T	T	26.3/5.5
C6008	4030006900	S.CER	C1608 JB 1H 103K-T	T	33.9/6
EP6001	6910002161	CAS	CASE-BM7H-LF		
EP6002	6910002161	CAS	CASE-BM7H-LF		

[MCF-W UNIT]

REF NO.	PARTS NO.	DESCRIPTION		M.	H/V LOCATION
FI7001	2030000730	S.MON	FL-424 (HF-734A 64.455M BW15K)	T	20/6
L7001	6200012350	S.COI	C2520C-R62G-A	T	8.9/7.6
L7002	6200012350	S.COI	C2520C-R62G-A	T	8.9/4.4
L7003	6200012350	S.COI	C2520C-R62G-A	T	31.2/7.6
L7004	6200012350	S.COI	C2520C-R62G-A	T	31.2/4.4
C7001	4030006900	S.CER	C1608 JB 1H 103K-T	T	6.2/6
C7002	4030007040	S.CER	C1608 CH 1H 180J-T	T	13.6/6.5
C7004	4030006990	S.CER	C1608 CH 1H 080D-T	T	17.9/2.6
C7007	4030007040	S.CER	C1608 CH 1H 180J-T	T	26.3/5.5
C7008	4030006900	S.CER	C1608 JB 1H 103K-T	T	33.9/6
EP7001	6910002161	CAS	CASE-BM7H-LF		
EP7002	6910002161	CAS	CASE-BM7H-LF		

M.=Mounted side (T: Mounted on the Top side, B: Mounted on the Bottom side)
S.=Surface mount

[PA UNIT]

REF NO.	PARTS NO.	DESCRIPTION		M.	H/V LOCATION
IC1	1180002020	S.REG	BA033FP-E2	T	21.5/71.2
IC2	1180002781	REG	KIA7805API-U/PF		
IC3	1180003150	REG	KIA7808API-U/PF		
IC101	1110006380	S.IC	LM2904PWR	T	53.2/11.7
Q1	1560001620	FET	RD06HVF1-101		
Q2	1560001530	FET	RD15HVF1-101		
Q3	1560001530	FET	RD15HVF1-101		
Q4	1560001640	FET	RD100HHF1C-103		
Q5	1560001640	FET	RD100HHF1C-103		
Q9	1590003680	S.TRA	KRC402 RTK/P	T	75.1/86.5
Q101	1520000651	S.TRA	2SB1201S-TL-E	T	63.4/9.5
Q102	1530002060	S.TRA	2SC4081 T106 R	T	58.2/10.8
D1	1160000060	S.DIO	DAN202U T106	T	28.7/20.7
D2	1160000060	S.DIO	DAN202U T106	T	32.7/55.8
D4	1790000700	DIO	DSA3A1		
D5	1790000700	DIO	DSA3A1		
D7	1160000060	S.DIO	DAN202U T106	T	74.1/82.2
D8	1790000700	DIO	DSA3A1		
D11	1160000060	S.DIO	DAN202U T106	T	84/60.7
D12	1160000060	S.DIO	DAN202U T106	T	74.8/8.9
D101	1730002341	S.ZEN	MAZ8047GML	T	59/14.1
L1	6140003240	COI	LR-361		
L4	6140001180	COI	LR-143		
L6	6140003510	COI	LR-393		
L7	6140000610	COI	LR-83		
L8	6140002030	COI	LR-230 (SK-10M-15Y 120)		
L14	6140003230	S.COI	LR-360	T	10/42.6
L21	6110001730	COI	LA-262		
R1	7030003370	S.RES	ERJ3GEYJ 271 V (270)	T	11.5/34.4
R2	7030003230	S.RES	ERJ3GEYJ 180 V (18)	T	9.6/35.2
R3	7030003370	S.RES	ERJ3GEYJ 271 V (270)	T	11.6/36
R4	7310005390	S.TRI	EVM-3VSX50 BQ3 (472)	T	13/52.3
R5	7030003480	S.RES	ERJ3GEYJ 222 V (2.2K)	T	12.8/48.7
R6	7030003360	S.RES	ERJ3GEYJ 221 V (220)	T	14.2/48.7
R7	7030006210	S.RES	ERJ12YJ4R7U (4.7)	T	16/38.8
R8	7030006270	S.RES	ERJ12YJ221U (220)	T	19.7/31.6
R9	7030003380	S.RES	ERJ3GEYJ 331 V (330)	T	16.6/41.3
R11	7030000220	S.RES	MCR10EZHJ 47 (470)	T	32.7/52.2
R12	7030000220	S.RES	MCR10EZHJ 47 (470)	T	30.5/18
R13	7030003440	S.RES	ERJ3GEYJ 102 V (1K)	T	32.9/58.9
R14	7310005390	S.TRI	EVM-3VSX50 BQ3 (472)	T	38.3/75.6
R15	7030003440	S.RES	ERJ3GEYJ 102 V (1K)	T	27.4/22.7
R16	7310005390	S.TRI	EVM-3VSX50 BQ3 (472)	T	22.5/22.9
R17	7030010480	S.RES	ERJ1TYJ 181U (180)	T	46.8/46.1
R18	7030010480	S.RES	ERJ1TYJ 181U (180)	T	41.3/12.5
R19	7030003480	S.RES	ERJ3GEYJ 222 V (2.2K)	T	34.8/47.3
R20	7030003480	S.RES	ERJ3GEYJ 222 V (2.2K)	T	31.4/15.9
R22	7030010950	S.RES	ERJ1TYJ 100U (10)	T	63/51.2
R23	7030003360	S.RES	ERJ3GEYJ 221 V (220)	T	10.7/46.8
R28	7030011240	S.RES	LRF3W-LF-01-R020F	T	136.9/85.3
R29	7030003440	S.RES	ERJ3GEYJ 102 V (1K)	T	131/83.5
R30	7030011240	S.RES	LRF3W-LF-01-R020F	T	144.3/85.3
R31	7030003440	S.RES	ERJ3GEYJ 102 V (1K)	T	132.9/82.4
R38	7030010570	S.RES	ERJ1TYJ 4R7U (4.7)	T	162.4/54.5
R39	7030010570	S.RES	ERJ1TYJ 4R7U (4.7)	T	162.4/58.2
R40	7030010570	S.RES	ERJ1TYJ 4R7U (4.7)	T	162.4/61.9
R44	7070000681	RES	ERX3SJ 3R9 (3.9)		
R45	7030003860	S.RES	ERJ3GE JPW V	T	6.2/24.7
R61	7030010520	S.RES	ERJ1TYJ 101U (100)	T	77/32.9
R62	7030010410	S.RES	ERJ1TYJ 220U (22)	T	87.2/56.1
R63	7030010410	S.RES	ERJ1TYJ 220U (22)	T	87.2/11
R64	7030003440	S.RES	ERJ3GEYJ 102 V (1K)	T	84.7/63.8
R65	7310005450	S.TRI	EVM-3VSX50 BE3 (222)	T	83.2/69
R66	7030003440	S.RES	ERJ3GEYJ 102 V (1K)	T	74.1/6.1
R67	7310005450	S.TRI	EVM-3VSX50 BE3 (222)	T	76.3/69
R69	7030010470	S.RES	ERJ1TYJ 5R6U (5.6)	T	80.8/50
R70	7030010470	S.RES	ERJ1TYJ 5R6U (5.6)	T	80.8/16
R72	7030003480	S.RES	ERJ3GEYJ 222 V (2.2K)	T	80.7/57.6
R73	7030003480	S.RES	ERJ3GEYJ 222 V (2.2K)	T	80.7/8.2
R74	7030011220	S.RES	ERJ1TY 180U (18)	T	87.6/28.2
R75	7030011220	S.RES	ERJ1TY 180U (18)	T	87.3/24.5
R76	7030011220	S.RES	ERJ1TY 180U (18)	T	87.5/38
R77	7030011220	S.RES	ERJ1TY 180U (18)	T	87.3/41.7
R83	7030010470	S.RES	ERJ1TYJ 5R6U (5.6)	T	80.8/53.7
R84	7030010470	S.RES	ERJ1TYJ 5R6U (5.6)	T	80.8/12.1
R85	7510001551	S.THE	NTCG16 4LH 333JT	T	93.2/6.6
R86	7030003470	S.RES	ERJ3GEYJ 182 V (1.8K)	T	91.7/5.4
R87	7030003860	S.RES	ERJ3GE JPW V	T	44.8/5.4
R88	7030003490	S.RES	ERJ3GEYJ 272 V (2.7K)	T	44.8/6.8
R103	7030003860	S.RES	ERJ3GE JPW V	T	54.5/16.5
R104	7030003860	S.RES	ERJ3GE JPW V	T	51.9/16.5
R105	7030008170	S.RES	ERJ12YJ1R0U (1)	T	68.9/12.6
R108	7030000340	S.RES	MCR10EZHJ 470 (471)	T	59/7.5
R109	7030003560	S.RES	ERJ3GEYJ 103 V (10K)	T	56.3/10.6
R110	7030003600	S.RES	ERJ3GEYJ 223 V (22K)	T	53.9/6.1
R111	7030003600	S.RES	ERJ3GEYJ 223 V (22K)	T	52.4/6.1
R112	7030003560	S.RES	ERJ3GEYJ 103 V (10K)	T	51.1/6.1
C1	4030011600	S.CER	C1608 JB 1E 104K-T	T	14/45
C2	4030006860	S.CER	C1608 JB 1H 102K-T	T	11.4/48.7
C3	4030011600	S.CER	C1608 JB 1E 104K-T	T	10/48.7
C4	4030006860	S.CER	C1608 JB 1H 102K-T	T	16.4/36.3
C5	4030011600	S.CER	C1608 JB 1E 104K-T	T	18.9/27.3
C6	4030006860	S.CER	C1608 JB 1H 102K-T	T	20.1/27.3
C7	4030011340	S.CER	C1608 CH 1H 471J-T	T	14.4/42.1

[PA UNIT]

REF NO.	PARTS NO.	DESCRIPTION		M.	H/V LOCATION
C8	4030011600	S.CER	C1608 JB 1E 104K-T	T	16.4/35.1
C14	4030008920	S.CER	C1608 JB 1H 473K-T	T	30.8/57.4
C15	4030008920	S.CER	C1608 JB 1H 473K-T	T	26.2/21.5
C16	4030012490	S.CER	GRM31M1X2A472JZ01L (GRM42-6 SL)	T	38.6/46.9
C17	4030012490	S.CER	GRM31M1X2A472JZ01L (GRM42-6 SL)	T	33.4/15.8
C19	4010005830	CER	HM74SJ SL 151J 500V		
C20	4030011600	S.CER	C1608 JB 1E 104K-T	T	61/59
C22	4030008920	S.CER	C1608 JB 1H 473K-T	T	82.1/63.8
C23	4030008920	S.CER	C1608 JB 1H 473K-T	T	75.4/6.1
C24	4030007090	S.CER	C1608 CH 1H 470J-T	T	9.6/38.1
C25	4030018530	S.CER	C3216 CH 1H 103J-T	T	32.5/44.9
C26	4030018530	S.CER	C3216 CH 1H 103J-T	T	33.7/24.7
C27	4030011600	S.CER	C1608 JB 1E 104K-T	T	83.4/63.8
C28	4030011600	S.CER	C1608 JB 1E 104K-T	T	76.7/6.1
C30	4030011600	S.CER	C1608 JB 1E 104K-T	T	125.3/68.8
C33	4030006900	S.CER	C1608 JB 1H 103K-T	T	132.9/78.9
C34	4030006900	S.CER	C1608 JB 1H 103K-T	T	131/80
C35	4030006860	S.CER	C1608 JB 1H 102K-T	T	125.3/67
C36	4510004601	ELE	16 ME 1000 HC		
C37	4030011600	S.CER	C1608 JB 1E 104K-T	T	151.3/79.9
C39	4510004601	ELE	16 ME 1000 HC		
C40	4510004601	ELE	16 ME 1000 HC		
C41	4030006860	S.CER	C1608 JB 1H 102K-T	T	14/46.3
C42	4030011600	S.CER	C1608 JB 1E 104K-T	T	74/84.1
C52	4030011740	S.CER	GRM32N2C2H201JV01L (GRM42-2 CH)	T	80.7/32.9
C57	4030018750	S.CER	C3225 CH 2J 682K-T	T	84.4/45.8
C58	4030018750	S.CER	C3225 CH 2J 682K-T	T	84.3/20.3
C62	4030012480	S.CER	GRM31M2C2H121JV01L (GRM42-6 CH)	T	117.8/51.6
C63	4030012480	S.CER	GRM31M2C2H121JV01L (GRM42-6 CH)	T	118/14.2
C64	4030011730	S.CER	GRM31M2C2H101JV01L (GRM42-6 CH)		
C65	4030011740	S.CER	GRM32N2C2H201JV01L (GRM42-2 CH)	T	110.6/33
C66	4030011740	S.CER	GRM32N2C2H201JV01L (GRM42-2 CH)	T	113.6/33
C67	4030011740	S.CER	GRM32N2C2H201JV01L (GRM42-2 CH)	T	116.6/33
C68	4030011740	S.CER	GRM32N2C2H201JV01L (GRM42-2 CH)	T	119.7/33
C71	4030011600	S.CER	C1608 JB 1E 104K-T	T	26/66.7
C72	4030011600	S.CER	C1608 JB 1E 104K-T	T	31.6/76.7
C73	4510009910	S.ELE	16 CE 10 LH	T	30/68.8
C74	4510009910	S.ELE	16 CE 10 LH	T	30/73.6
C75	4030011600	S.CER	C1608 JB 1E 104K-T	T	11.2/83.8
C76	4030011600	S.CER	C1608 JB 1E 104K-T	T	17.9/85.7
C77	4510009920	S.ELE	16 CE 100 LH	T	15.6/80.9
C78	4510009920	S.ELE	16 CE 100 LH	T	23.4/84.5
C79	4030011600	S.CER	C1608 JB 1E 104K-T	T	37.1/81.2
C80	4030011600	S.CER	C1608 JB 1E 104K-T	T	48.7/81.2
C81	4510009910	S.ELE	16 CE 10 LH	T	40.7/81.5
C82	4510009910	S.ELE	16 CE 10 LH	T	45.6/81.5
C89	4030011600	S.CER	C1608 JB 1E 104K-T	T	73.2/86.4
C90	4030011600	S.CER	C1608 JB 1E 104K-T	T	94.7/5.4
C91	4030011600	S.CER	C1608 JB 1E 104K-T	T	47.5/5.4
C101	4510009920	S.ELE	16 CE 100 LH	T	147.7/11.4
C102	4030006900	S.CER	C1608 JB 1H 103K-T	T	68.9/8.2
C103	4030006900	S.CER	C1608 JB 1H 103K-T	T	56.3/7.7
C104	4030011600	S.CER	C1608 JB 1E 104K-T	T	55.1/7.7
C107	4030006900	S.CER	C1608 JB 1H 103K-T	T	149.9/79.9
C108	4030006900	S.CER	C1608 JB 1H 103K-T	T	10.9/12.7
C109	4030006900	S.CER	C1608 JB 1H 103K-T	T	14.7/12.7
C110	4030006900	S.CER	C1608 JB 1H 103K-T	T	19.7/12.7
C111	4030006900	S.CER	C1608 JB 1H 103K-T	T	20.9/12.7
C112	4030006900	S.CER	C1608 JB 1H 103K-T	T	15.9/12.7
C113	4030006900	S.CER	C1608 JB 1H 103K-T	T	12.1/12.7
C114	4030006900	S.CER	C1608 JB 1H 103K-T	T	22.1/12.7
C115	4030006900	S.CER	C1608 JB 1H 103K-T	T	18/12.7
C121	4550007650	S.TAN	F931V105MAABMA	T	90.6/71.5
C131	4030018750	S.CER	C3225 CH 2J 682K-T	T	74.3/45.3
C132	4030018750	S.CER	C3225 CH 2J 682K-T	T	74.2/20.7
C133	4030012620	S.CER	GRM55R2C2H102JV01L (GRM44-1)	T	78.5/43.4
C134	4030012620	S.CER	GRM55R2C2H102JV01L (GRM44-1)	T	78.5/22.6
C135	4030011730	S.CER	GRM31M2C2H101JV01L (GRM42-6 CH)	T	70.3/44.4
C136	4030011730	S.CER	GRM31M2C2H101JV01L (GRM42-6 CH)	T	70.3/21.6
RL1	6330001471	REL	AJS1311F-K2		
CP1	6910009670	S.CHE	HK3-S-T	T	48.5/10
CP2	6910009670	S.CHE	HK3-S-T	T	48.5/8.2
J1	6510007020	CON	TMP-J01X-V6		
J2	6510007020	CON	TMP-J01X-V6		
J3	6510022601	S.CON	30FMN-BMTTR-A-TBT(LF)(SN)	T	25.4/7.7
J10	6510003081	CON	RT01T-1.0B(LF)		
J101	6510018961	S.CON	B2B-PH-SM4-TB(LF)(SN)	T	138.5/10.7
F1	5220000400	HOL	FHA010-01F		
F2	5210000940	FUS	1205		
W14	9016910440	WIR	23/06/050/D21/W05		

M.=Mounted side (T: Mounted on the Top side, B: Mounted on the Bottom side)
S.=Surface mount

[PA UNIT]

REF NO.	PARTS NO.	DESCRIPTION		M.	H/V LOCATION
EP2	6910019200	S.BEA	N2012ZPS121T50	T	28.1/56.7
EP4	6510018330	TER	F4053A		
EP5	6510018330	TER	F4053A		
EP6	6910019200	S.BEA	N2012ZPS121T50	T	65.2/56.6
EP19	6910019200	S.BEA	N2012ZPS121T50	T	60.2/52.8
EP20	6910019200	S.BEA	N2012ZPS121T50	T	60.2/49.5

[FILTER UNIT]

REF NO.	PARTS NO.	DESCRIPTION		M.	H/V LOCATION
Q101	1590003680	S.TRA	KRC402 RTK/P	T	145.4/87.7
Q102	1590003770	S.TRA	KRA302E-RTK/P	T	145.6/85.1
Q151	1590003680	S.TRA	KRC402 RTK/P	T	142.9/87.7
Q152	1590003770	S.TRA	KRA302E-RTK/P	T	143.1/85.1
Q201	1590003680	S.TRA	KRC402 RTK/P	T	140.4/87.7
Q202	1590003770	S.TRA	KRA302E-RTK/P	T	140.6/85.1
Q251	1590003680	S.TRA	KRC402 RTK/P	T	116.8/87.7
Q252	1590003770	S.TRA	KRA302E-RTK/P	T	117/85.1
Q301	1590003680	S.TRA	KRC402 RTK/P	T	114.3/87.7
Q302	1590003770	S.TRA	KRA302E-RTK/P	T	114.4/85.1
Q351	1590003680	S.TRA	KRC402 RTK/P	T	109.3/87.7
Q352	1590003770	S.TRA	KRA302E-RTK/P	T	109.5/85.1
Q401	1590003680	S.TRA	KRC402 RTK/P	T	106.8/87.7
Q402	1590003770	S.TRA	KRA302E-RTK/P	T	107/85.1
D102	1750001320	S.DIO	KDS4148U RTK/P	T	154.9/77.3
D152	1750001320	S.DIO	KDS4148U RTK/P	T	139.4/77.3
D154	1750001320	S.DIO	KDS4148U RTK/P	T	135.6/86.5
D155	1750001320	S.DIO	KDS4148U RTK/P	T	137.4/86.5
D202	1750001320	S.DIO	KDS4148U RTK/P	T	124/77.3
D252	1750001320	S.DIO	KDS4148U RTK/P	T	106.5/78.6
D302	1750001320	S.DIO	KDS4148U RTK/P	T	92.5/84
D352	1750001320	S.DIO	KDS4148U RTK/P	T	61.9/84
D402	1750001320	S.DIO	KDS4148U RTK/P	T	46.6/84
L1	6200002041	S.COI	NLV25T-101J	T	121/84.5
L102	6110003540	COI	LA-548 (LA-215A)		
L103	6110003570	COI	LA-550		
L104	6110003550	COI	LA-547 (LA-214A)		
L152	6110002920	COI	LA-481		
L153	6140004750	COI	LR-535		
L154	6140004750	COI	LR-535		
L202	6140003450	COI	LR-387 (T50-10)		
L203	6140003460	COI	LR-388 (T50-10)		
L204	6140003460	COI	LR-388 (T50-10)		
L252	6140001160	COI	LR-141 (T68-2)		
L253	6140001160	COI	LR-141 (T68-2)		
L254	6140001160	COI	LR-141 (T68-2)		
L302	6110002920	COI	LA-481		
L303	6110002910	COI	LA-480		
L352	6140001240	COI	LR-149 (T68-2)		
L353	6140001130	COI	LR-138 (T68-2)		
L401	6200002041	S.COI	NLV25T-101J	T	38.7/20.9
L402	6140002570	COI	LR-294 (T50-2)		
L403	6140002580	COI	LR-295 (T50-2)		
L501	6140003440	COI	LR-386 (FK-100E-5003H)		
L502	6140003440	COI	LR-386 (FK-100E-5003H)		
R101	7030003360	S.RES	ERJ3GEYJ 221 V (220)	T	158.1/77.3
R102	7030003360	S.RES	ERJ3GEYJ 221 V (220)	T	158.1/79.2
R151	7030003360	S.RES	ERJ3GEYJ 221 V (220)	T	142.5/77.3
R152	7030003360	S.RES	ERJ3GEYJ 221 V (220)	T	142.5/79.1
R201	7030003360	S.RES	ERJ3GEYJ 221 V (220)	T	127.2/77.3
R202	7030003360	S.RES	ERJ3GEYJ 221 V (220)	T	127.2/79.1
R251	7030003360	S.RES	ERJ3GEYJ 221 V (220)	T	110.4/79.4
R252	7030003360	S.RES	ERJ3GEYJ 221 V (220)	T	109.2/79.4
R301	7030003360	S.RES	ERJ3GEYJ 221 V (220)	T	95.6/84
R302	7030003360	S.RES	ERJ3GEYJ 221 V (220)	T	95.6/85.8
R351	7030003360	S.RES	ERJ3GEYJ 221 V (220)	T	65/84
R352	7030003360	S.RES	ERJ3GEYJ 221 V (220)	T	65/85.8
R401	7030003360	S.RES	ERJ3GEYJ 221 V (220)	T	49.7/84
R402	7030003360	S.RES	ERJ3GEYJ 221 V (220)	T	49.7/85.8
C101	4030006900	S.CER	C1608 JB 1H 103K-T	T	150/21
C105	4030011160	S.CER	GRM31M2C2H150JV01L (GRM42-6 CH)	T	161.6/26
C106	4030011120	S.CER	GRM31M2C2H100JV01L (GRM42-6 CH)	T	168.6/34.1
C107	4030011190	S.CER	GRM31M2C2H270JV01L (GRM42-6 CH)	T	155.4/39.7
C108	4030011240	S.CER	GRM31M2C2H470JV01L (GRM42-6 CH)	T	155.4/41.8
C109	4030011160	S.CER	GRM31M2C2H150JV01L (GRM42-6 CH)	T	168.6/44.1
C110	4030011240	S.CER	GRM31M2C2H470JV01L (GRM42-6 CH)	T	155.2/57.6
C111	4030011240	S.CER	GRM31M2C2H470JV01L (GRM42-6 CH)	T	155.2/60.4
C112	4030011100	S.CER	GRM31M2C2H8R0DV01L (GRM42-6 CH)	T	158.8/61.9
C113	4030011240	S.CER	GRM31M2C2H470JV01L (GRM42-6 CH)	T	155.2/63.5
C114	4030006900	S.CER	C1608 JB 1H 103K-T	T	155.2/79.2
C154	4030006900	S.CER	C1608 JB 1H 103K-T	T	137.1/18.1
C158	4030011180	S.CER	GRM31M2C2H220JV01L (GRM42-6 CH)	T	148.8/29.5
C159	4030011730	S.CER	GRM31M2C2H101JV01L (GRM42-6 CH)	T	150.4/36.4
C160	4030011730	S.CER	GRM31M2C2H101JV01L (GRM42-6 CH)	T	150.4/38.5
C162	4030011730	S.CER	GRM31M2C2H101JV01L (GRM42-6 CH)	T	141.4/48.9
C163	4030012480	S.CER	GRM31M2C2H121JV01L (GRM42-6 CH)	T	147.5/48.9
C165	4030012480	S.CER	GRM31M2C2H121JV01L (GRM42-6 CH)	T	147.5/51
C166	4030011510	S.CER	GRM31M2C2H560JV01L (GRM42-6 CH)	T	140.4/63.4
C170	4030014460	S.CER	GRM31M2C2H820JV01L (GRM42-6 CH)	T	146.2/65.6

M.=Mounted side (T: Mounted on the Top side, B: Mounted on the Bottom side)
S.=Surface mount

[FILTER UNIT]

REF NO.	PARTS NO.	DESCRIPTION		M.	H/V LOCATION
C172	4030006900	S.CER	C1608 JB 1H 103K-T	T	139.7/79.1
C201	4030006900	S.CER	C1608 JB 1H 103K-T	T	122.1/18.1
C203	4030011190	S.CER	GRM31M2C2H270JV01L (GRM42-6 CH)	T	126.1/32.1
C204	4030012480	S.CER	GRM31M2C2H121JV01L (GRM42-6 CH)	T	126.1/37.3
C206	4030011050	S.CER	GRM31M3C2H3R0CY21L (GRM42-6 CJ)	T	131.6/48.1
C207	4030011190	S.CER	GRM31M2C2H270JV01L (GRM42-6 CH)	T	131.6/50.2
C209	4030011550	S.CER	GRM31M2C2H680JV01L (GRM42-6 CH)	T	123.3/50.1
C210	4030011550	S.CER	GRM31M2C2H680JV01L (GRM42-6 CH)	T	123.3/48
C211	4030011120	S.CER	GRM31M2C2H100JV01L (GRM42-6 CH)	T	134.9/57.5
C212	4030011210	S.CER	GRM31M2C2H330JV01L (GRM42-6 CH)	T	124/62.9
C213	4030006900	S.CER	C1608 JB 1H 103K-T	T	124.3/79.1
C251	4030006900	S.CER	C1608 JB 1H 103K-T	T	106.7/17.8
C252	4010005880	CER	HM95SJ SL 271J 500V		
C253	4010005880	CER	HM95SJ SL 271J 500V		
C254	4030011730	S.CER	GRM31M2C2H101JV01L (GRM42-6 CH)	T	102.5/36.2
C255	4030011550	S.CER	GRM31M2C2H680JV01L (GRM42-6 CH)	T	104.8/36.2
C256	4010008300	CER	HM11TJ SL 391J 500V		
C257	4010008200	CER	HM11TJ SL 331J 500V		
C260	4030012480	S.CER	GRM31M2C2H121JV01L (GRM42-6 CH)	T	106.5/51.9
C261	4010008300	CER	HM11TJ SL 391J 500V		
C262	4030011230	S.CER	GRM31M2C2H390JV01L (GRM42-6 CH)	T	106.9/69.6
C263	4010008300	CER	HM11TJ SL 391J 500V		
C264	4010005880	CER	HM95SJ SL 271J 500V		
C265	4030006900	S.CER	C1608 JB 1H 103K-T	T	106.8/80.3
C301	4030006900	S.CER	C1608 JB 1H 103K-T	T	91.5/16.1
C302	4030012480	S.CER	GRM31M2C2H121JV01L (GRM42-6 CH)	T	96/20.7
C303	4030011170	S.CER	GRM31M2C2H180JV01L (GRM42-6 CH)	T	94/34.9
C304	4030012480	S.CER	GRM31M2C2H121JV01L (GRM42-6 CH)	T	90.1/45.2
C305	4030012480	S.CER	GRM31M2C2H121JV01L (GRM42-6 CH)	T	90.1/47.7
C306	4030011240	S.CER	GRM31M2C2H470JV01L (GRM42-6 CH)	T	95.4/55.2
C307	4030011730	S.CER	GRM31M2C2H101JV01L (GRM42-6 CH)	T	95.4/72.1
C308	4030006900	S.CER	C1608 JB 1H 103K-T	T	92.8/85.8
C351	4030006900	S.CER	C1608 JB 1H 103K-T	T	60.9/16.1
C352	4010005360	CER	HM11SJ SL 301J 500V		
C353	4010005360	CER	HM11SJ SL 301J 500V		
C354	4010005370	CER	HM11SJ SL 331J 500V		
C355	4010005360	CER	HM11SJ SL 301J 500V		
C356	4010005830	CER	HM74SJ SL 151J 500V		
C357	4010005360	CER	HM11SJ SL 301J 500V		
C358	4010005360	CER	HM11SJ SL 301J 500V		
C360	4030011730	S.CER	GRM31M2C2H101JV01L (GRM42-6 CH)	T	62.8/63.1
C361	4010005360	CER	HM11SJ SL 301J 500V		
C362	4010008300	CER	HM11TJ SL 391J 500V		
C363	4030006900	S.CER	C1608 JB 1H 103K-T	T	62.2/85.8
C401	4030006900	S.CER	C1608 JB 1H 103K-T	T	45.4/16
C402	4010007590	CER	HM15SJ SL 681J 500V		
C403	4010007590	CER	HM15SJ SL 681J 500V		
C404	4010007590	CER	HM15SJ SL 681J 500V		
C405	4010007590	CER	HM15SJ SL 681J 500V		
C406	4010006410	CER	HM13SJ SL 471J 500V		
C407	4010008260	CER	HM74TJ SL 151J 500V		
C408	4010008200	CER	HM11TJ SL 331J 500V		
C409	4010008280	CER	HM95TJ SL 221J 500V		
C410	4010005390	CER	HM15SJ SL 621J 500V		
C411	4010005390	CER	HM15SJ SL 621J 500V		
C412	4010005390	CER	HM15SJ SL 621J 500V		
C413	4010008200	CER	HM11TJ SL 331J 500V		
C415	4030012480	S.CER	GRM31M2C2H121JV01L (GRM42-6 CH)	T	55.5/61.2
C416	4010005390	CER	HM15SJ SL 621J 500V		
C417	4010005390	CER	HM15SJ SL 621J 500V		
C419	4030006900	S.CER	C1608 JB 1H 103K-T	T	46.9/85.8
C501	4030018980	S.CER	C1608 JB 1H 104K-T	T	24.5/85.7
C502	4030018980	S.CER	C1608 JB 1H 104K-T	T	15.5/85.7
C503	4030006880	S.CER	C1608 JB 1H 472K-T	T	26.5/85.7
C504	4030006880	S.CER	C1608 JB 1H 472K-T	T	13.5/85.7
C507	4030018980	S.CER	C1608 JB 1H 104K-T	T	20/84
C508	4030006880	S.CER	C1608 JB 1H 472K-T	T	20/80.5
C513	4030018980	S.CER	C1608 JB 1H 104K-T	T	30/47
C514	4030018980	S.CER	C1608 JB 1H 104K-T	T	10/47
C515	4030006880	S.CER	C1608 JB 1H 472K-T	T	30/44.5
C516	4030006880	S.CER	C1608 JB 1H 472K-T	T	10/44.5
C517	4510004330	ELE	35 ME 10 SWB		
C521	4030006880	S.CER	C1608 JB 1H 472K-T	T	33.1/21.4
C522	4030006880	S.CER	C1608 JB 1H 472K-T	T	6.8/21.4
C523	4030018980	S.CER	C1608 JB 1H 104K-T	T	33.1/19
C524	4030018980	S.CER	C1608 JB 1H 104K-T	T	6.8/19
C527	4030018980	S.CER	C1608 JB 1H 104K-T	T	20/8.3
C528	4510004330	ELE	35 ME 10 SWB		
RL101	6330001721	REL	ATN207-K1		
RL102	6330001721	REL	ATN207-K1		
RL151	6330001721	REL	ATN207-K1		
RL152	6330001721	REL	ATN207-K1		

[FILTER UNIT]

REF NO.	PARTS NO.	DESCRIPTION		M.	H/V LOCATION
RL201	6330001721	REL	ATN207-K1		
RL202	6330001721	REL	ATN207-K1		
RL251	6330001721	REL	ATN207-K1		
RL252	6330001721	REL	ATN207-K1		
RL301	6330001721	REL	ATN207-K1		
RL302	6330001721	REL	ATN207-K1		
RL351	6330001721	REL	ATN207-K1		
RL352	6330001721	REL	ATN207-K1		
RL401	6330001721	REL	ATN207-K1		
RL402	6330001721	REL	ATN207-K1		
J1	6510007020	CON	TMP-J01X-V6		
J2	6510007020	CON	TMP-J01X-V6		
J3	6510022621	S.CON	10FMN-BMTTR-A-TBT(LF)(SN)	T	128.5/86
W9	8900009621	CAB	OPC-961A		
W10	8900009631	CAB	OPC-962A		
EP501	6510018330	TER	F4053A		
EP502	6510018330	TER	F4053A		

M.=Mounted side (T: Mounted on the Top side, B: Mounted on the Bottom side)
S.=Surface mount

[CTRL UNIT]

REF NO.	PARTS NO.	DESCRIPTION		M.	H/V LOCATION
IC1	1110000960	S.IC	NJM4558M-TE1-#FMZB	T	112.5/54.9
IC21	1120002301	S.IC	TC74AC04F(F) S	T	104/68.5
IC22	1120002252	S.IC	TC74ACT32F(F)	T	121.5/68.8
IC23	1120002242	S.IC	TC74AC112F(F)	T	131.7/69
IC51	1110000960	S.IC	NJM4558M-TE1-#FMZB	T	116.6/80.8
IC81	1110002690	S.IC	NJM2903M-TE1-#FMZB	T	44.6/10
IC201	1140015071	S.IC	R5F212A7SNFP(SX-3073B-1)	T	153.9/68.5
IC202	1130011570	S.IC	BR24L32FV-WE2	T	172.3/63.6
IC203	1110005920	S.IC	S-80851CNMC-B9CT2G	T	142.2/76.8
IC204	1180001071	S.IC	TA7805F(TE16L,Q)	T	156.5/35.2
IC251	1130012620	S.IC	SN74AHCT1G86DCKR	T	176.5/86.1
IC261	1130011530	S.IC	CD74HC4094M96	T	146.4/28.4
Q41	1560000871	S.FET	2SK515-T1B-A (X33)	T	104.2/80.2
Q42	1590001330	S.TRA	DTA114EUA T106	T	108.2/86.4
Q101	1590003770	S.TRA	KRA302E-RTK/P	T	14.2/13
Q102	1590003680	S.TRA	KRC402 RTK/P	T	30.4/54.2
Q103	1590003770	S.TRA	KRA302E-RTK/P	T	34.9/53.9
Q104	1590003680	S.TRA	KRC402 RTK/P	T	14.2/10.1
Q105	1530003960	S.TRA	KTC2875-B-RTK/P	T	19.3/46.8
Q106	1590003680	S.TRA	KRC402 RTK/P	T	60.3/91.5
Q107	1590003770	S.TRA	KRA302E-RTK/P	T	62.8/91.2
Q108	1590003770	S.TRA	KRA302E-RTK/P	T	38.7/40.7
Q109	1590003770	S.TRA	KRA302E-RTK/P	T	72.5/16.6
Q110	1590003680	S.TRA	KRC402 RTK/P	T	38.5/43.4
Q111	1590003680	S.TRA	KRC402 RTK/P	T	69.9/16.3
Q112	1590003680	S.TRA	KRC402 RTK/P	T	23.2/61.8
Q131	1520000561	S.TRA	2SB1123 T-TD-E	T	26.7/81.3
Q132	1540000441	S.TRA	2SD1619T-TD-E	T	26.7/68.2
Q133	1590003680	S.TRA	KRC402 RTK/P	T	28.9/76.1
Q202	1590003770	S.TRA	KRA302E-RTK/P	T	167.6/91.3
Q203	1590003680	S.TRA	KRC402 RTK/P	T	170.1/88
Q241	1590003680	S.TRA	KRC402 RTK/P	T	184.2/89.1
Q242	1590003680	S.TRA	KRC402 RTK/P	T	186.7/89.1
Q243	1590003680	S.TRA	KRC402 RTK/P	T	178.9/89.1
Q244	1590003680	S.TRA	KRC402 RTK/P	T	181.4/89.1
Q245	1590003680	S.TRA	KRC402 RTK/P	T	186/79.1
Q246	1590003680	S.TRA	KRC402 RTK/P	T	188.5/79.1
Q247	1590003680	S.TRA	KRC402 RTK/P	T	180.6/79.1
Q248	1590003680	S.TRA	KRC402 RTK/P	T	183.1/79.1
Q249	1590003680	S.TRA	KRC402 RTK/P	T	150/92.5
Q261	1590003680	S.TRA	KRC402 RTK/P	T	163/41.8
Q263	1590003680	S.TRA	KRC402 RTK/P	T	171.1/77.2
Q264	1590003680	S.TRA	KRC402 RTK/P	T	172.2/73.5
D1	1790000491	S.DIO	HSM88ASTR-E	T	96/49
D2	1790000491	S.DIO	HSM88ASTR-E	T	96/60.7
D3	1750000201	S.DIO	1SS319(TE85R,F)	T	120.5/45.7
D21	1790000491	S.DIO	HSM88ASTR-E	T	103.7/62.1
D22	1790000491	S.DIO	HSM88ASTR-E	T	102.6/75
D23	1790000491	S.DIO	HSM88ASTR-E	T	127.9/84.6
D24	1790000491	S.DIO	HSM88ASTR-E	T	128.2/79.5
D41	1790000491	S.DIO	HSM88ASTR-E	T	97.4/82.2
D42	1790000491	S.DIO	HSM88ASTR-E	T	97.4/78.8
D51	1750000121	S.DIO	DWA010-TE-E	T	121.5/86.6
D81	1790000491	S.DIO	HSM88ASTR-E	T	36.1/10.9
D101	1750001320	S.DIO	KDS4148U RTK/P	T	14.2/15.2
D102	1750001320	S.DIO	KDS4148U RTK/P	T	38.2/54.3
D103	1750001320	S.DIO	KDS4148U RTK/P	T	67.9/91
D104	1750000851	S.DIO	MMBV3700LT1G	T	23.7/49
D105	1750000851	S.DIO	MMBV3700LT1G	T	26.7/48.9
D106	1750001320	S.DIO	KDS4148U RTK/P	T	75/16.2
D107	1750001320	S.DIO	KDS4148U RTK/P	T	38.3/38
D131	1710000140	DIO	U05G		
D202	1750001320	S.DIO	KDS4148U RTK/P	T	160.9/28.6
D241	1750000201	S.DIO	1SS319(TE85R,F)	T	181.5/75.2
D242	1750000201	S.DIO	1SS319(TE85R,F)	T	187.5/75.2
D243	1750000201	S.DIO	1SS319(TE85R,F)	T	179.7/85.5
D244	1750000201	S.DIO	1SS319(TE85R,F)	T	185.8/85.5
X201	6050009520	S.XTA	CR-520 SMD-49 19.6608 MHz	T	167/67
L1	6140003270	COI	LR-364 (TR10X5X5 3A6)		
L2	6200005011	S.COI	NLV25T-100J	T	123.8/51.8
L21	6140003270	COI	LR-364 (TR10X5X5 3A6)		
L22	6200005011	S.COI	NLV25T-100J	T	133/47
L41	6140003270	COI	LR-364 (TR10X5X5 3A6)		
L42	6180003300	COI	T6-222J (2.2M)		
L51	6200002041	S.COI	NLV25T-101J	T	126.6/52.9
L81	6140003270	COI	LR-364 (TR10X5X5 3A6)		
L82	6200002041	S.COI	NLV25T-101J	T	56.3/6.6
L83	6180003300	COI	T6-222J (2.2M)		
L102	6110001560	COI	LA-236		
L103	6110001630	COI	LA-246		
L133	6140004740	COI	LR-533		
L134	6140004740	COI	LR-533		
L201	6200009300	S.COI	ELJPA 100KF 10U	T	161.8/57.5
L202	6200002041	S.COI	NLV25T-101J	T	167.2/57.2
L240	6200005131	S.COI	NLC453232T-101K-PF	T	169.8/22.5
L251	6200002041	S.COI	NLV25T-101J	T	173.9/89.4
L261	6200002041	S.COI	NLV25T-101J	T	141.8/38.6
L262	6200002041	S.COI	NLV25T-101J	T	124.9/11.9
L291	6200005011	S.COI	NLV25T-100J	T	165.6/51.8
R1	7030010910	S.RES	ERJ1TYJ 150U (15)	T	95.8/52.7
R2	7030010910	S.RES	ERJ1TYJ 150U (15)	T	95.8/56.8
R3	7030003560	S.RES	ERJ3GEYJ 103 V (10K)	T	104.1/47.1
R4	7030003560	S.RES	ERJ3GEYJ 103 V (10K)	T	100.9/59.9
R5	7030003720	S.RES	ERJ3GEYJ 224 V (220K)	T	106.2/48.9

[CTRL UNIT]

REF NO.	PARTS NO.	DESCRIPTION		M.	H/V LOCATION
R6	7030003720	S.RES	ERJ3GEYJ 224 V (220K)	T	106.9/58.6
R7	7030003670	S.RES	ERJ3GEYJ 823 V (82K)	T	107.8/50.3
R8	7030003670	S.RES	ERJ3GEYJ 823 V (82K)	T	106.9/57.4
R9	7030003720	S.RES	ERJ3GEYJ 224 V (220K)	T	109.1/50.3
R10	7030003720	S.RES	ERJ3GEYJ 224 V (220K)	T	108.8/58.3
R11	7030003790	S.RES	ERJ3GEYJ 824 V (820K)	T	113.1/60.2
R12	7030003800	S.RES	ERJ3GEYJ 105 V (1M)	T	112.5/50.2
R13	7030003440	S.RES	ERJ3GEYJ 102 V (1K)	T	117.1/47.9
R14	7030003440	S.RES	ERJ3GEYJ 102 V (1K)	T	117.2/43.8
R18	7030003320	S.RES	ERJ3GEYJ 101 V (100)	T	100.8/62.3
R19	7030003320	S.RES	ERJ3GEYJ 101 V (100)	T	97.8/71.9
R21	7030010540	S.RES	ERJ1TYJ 330U (33)	T	92.4/69.8
R22	7030003860	S.RES	ERJ3GE JPW V	T	105/74.6
R23	7030003860	S.RES	ERJ3GE JPW V	T	107.4/61.7
R25	7030003800	S.RES	ERJ3GEYJ 105 V (1M)	T	106.3/74.6
R26	7030003800	S.RES	ERJ3GEYJ 105 V (1M)	T	107.4/63
R27	7030003280	S.RES	ERJ3GEYJ 470 V (47)	T	110.2/63
R28	7030003280	S.RES	ERJ3GEYJ 470 V (47)	T	115/73.3
R29	7030003440	S.RES	ERJ3GEYJ 102 V (1K)	T	116.4/68
R30	7030003440	S.RES	ERJ3GEYJ 102 V (1K)	T	116.4/71.8
R31	7030003280	S.RES	ERJ3GEYJ 470 V (47)	T	126.6/71
R32	7030003280	S.RES	ERJ3GEYJ 470 V (47)	T	120.9/62.6
R33	7030003280	S.RES	ERJ3GEYJ 470 V (47)	T	123.7/62.6
R34	7030003440	S.RES	ERJ3GEYJ 102 V (1K)	T	126.6/65.9
R35	7030003440	S.RES	ERJ3GEYJ 102 V (1K)	T	133/62.8
R36	7030003440	S.RES	ERJ3GEYJ 102 V (1K)	T	124/61.3
R37	7030003250	S.RES	ERJ3GEYJ 270 V (27)	T	129.5/75.1
R38	7030003280	S.RES	ERJ3GEYJ 470 V (47)	T	130.8/78.2
R39	7030003480	S.RES	ERJ3GEYJ 222 V (2.2K)	T	128/77.4
R40	7030003500	S.RES	ERJ3GEYJ 332 V (3.3K)	T	127.4/82.5
R41	7030003360	S.RES	ERJ3GEYJ 221 V (220)	T	126.1/81.2
R42	7030010550	S.RES	ERJ1TYJ 820U (82)	T	92.4/81.7
R43	7030003560	S.RES	ERJ3GEYJ 103 V (10K)	T	100.8/78.6
R44	7030003560	S.RES	ERJ3GEYJ 103 V (10K)	T	100.8/82.7
R45	7030003800	S.RES	ERJ3GEYJ 105 V (1M)	T	100.8/79.9
R46	7030003560	S.RES	ERJ3GEYJ 103 V (10K)	T	103.8/82.7
R47	7030003520	S.RES	ERJ3GEYJ 472 V (4.7K)	T	106.9/83.4
R48	7030003440	S.RES	ERJ3GEYJ 102 V (1K)	T	107.5/81.6
R49	7030004710	S.RES	ERJ3GEYJ 475 V (4.7M)	T	105.4/86.4
R51	7030003480	S.RES	ERJ3GEYJ 222 V (2.2K)	T	122.8/83.2
R52	7030003560	S.RES	ERJ3GEYJ 103 V (10K)	T	108.2/83.4
R53	7030003530	S.RES	ERJ3GEYJ 562 V (5.6K)	T	118.8/76.3
R54	7030003580	S.RES	ERJ3GEYJ 153 V (15K)	T	120.1/76.3
R55	7030003680	S.RES	ERJ3GEYJ 104 V (100K)	T	124.2/80.6
R56	7030003540	S.RES	ERJ3GEYJ 682 V (6.8K)	T	112.6/76.3
R57	7030003540	S.RES	ERJ3GEYJ 682 V (6.8K)	T	114/76.3
R58	7030003680	S.RES	ERJ3GEYJ 104 V (100K)	T	110.1/81.6
R61	7030003670	S.RES	ERJ3GEYJ 823 V (82K)	T	117.4/76.3
R62	7030003680	S.RES	ERJ3GEYJ 104 V (100K)	T	115.3/84.5
R63	7030003800	S.RES	ERJ3GEYJ 105 V (1M)	T	121.3/80.6
R64	7030003820	S.RES	ERJ3GEYJ 155 V (1.5M)	T	111.8/83.5
R65	7030003560	S.RES	ERJ3GEYJ 103 V (10K)	T	118.3/85.8
R66	7030003560	S.RES	ERJ3GEYJ 103 V (10K)	T	113.9/85.8
R67	7030003560	S.RES	ERJ3GEYJ 103 V (10K)	T	124.8/87.7
R68	7030003560	S.RES	ERJ3GEYJ 103 V (10K)	T	124.8/89.1
R69	7030003680	S.RES	ERJ3GEYJ 104 V (100K)	T	150.9/58.3
R70	7030003680	S.RES	ERJ3GEYJ 104 V (100K)	T	141/66.1
R71	7030003680	S.RES	ERJ3GEYJ 104 V (100K)	T	148.5/58.3
R72	7030003680	S.RES	ERJ3GEYJ 104 V (100K)	T	141/64.8
R81	7030010910	S.RES	ERJ1TYJ 150U (15)	T	36.1/14.9
R82	7030003650	S.RES	ERJ3GEYJ 563 V (56K)	T	33.6/9.7
R83	7030003710	S.RES	ERJ3GEYJ 184 V (180K)	T	49.6/12.4
R84	7030003610	S.RES	ERJ3GEYJ 273 V (27K)	T	51.8/8.8
R85	7030003660	S.RES	ERJ3GEYJ 683 V (68K)	T	51/12.4
R87	7030003680	S.RES	ERJ3GEYJ 104 V (100K)	T	46.8/6.5
R88	7030003840	S.RES	ERJ3GEYJ 225 V (2.2M)	T	51.8/7.4
R89	7030003860	S.RES	ERJ3GE JPW V	T	49.6/6.4
R90	7030003560	S.RES	ERJ3GEYJ 103 V (10K)	T	51.8/6
R101	7030003480	S.RES	ERJ3GEYJ 222 V (2.2K)	T	16.9/46.6
R102	7030003390	S.RES	ERJ3GEYJ 391 V (390)	T	17.6/44.7
R103	7030003520	S.RES	ERJ3GEYJ 472 V (4.7K)	T	21.6/46.9
R105	7030003390	S.RES	ERJ3GEYJ 391 V (390)	T	22.9/45.4
R106	7030003470	S.RES	ERJ3GEYJ 182 V (1.8K)	T	21/44.7
R107	7030003520	S.RES	ERJ3GEYJ 472 V (4.7K)	T	25.4/45.4
R108	7030003440	S.RES	ERJ3GEYJ 102 V (1K)	T	28.2/45.4
R110	7030003460	S.RES	ERJ3GEYJ 152 V (1.5K)	T	21/43.4
R112	7540000130	ABS	2P-50A-301		
R114	7030003640	S.RES	ERJ3GEYJ 473 V (47K)	T	35.6/56.4
R131	7030003480	S.RES	ERJ3GEYJ 222 V (2.2K)	T	35/83
R132	7030004050	S.RES	ERJ3GEYJ 1R0 V (1)	T	29.6/86.5
R133	7030004050	S.RES	ERJ3GEYJ 1R0 V (1)	T	30.3/59.2
R134	7030004050	S.RES	ERJ3GEYJ 1R0 V (1)	T	29.6/90.4
R135	7030004050	S.RES	ERJ3GEYJ 1R0 V (1)	T	30.3/62.9
R136	7030012240	S.RES	ERJ1TYJ 471U (470)	T	27.3/59.1
R137	7030003640	S.RES	ERJ3GEYJ 473 V (47K)	T	25.9/77.4
R138	7030003560	S.RES	ERJ3GEYJ 103 V (10K)	T	27.4/72
R139	7030003400	S.RES	ERJ3GEYJ 471 V (470)	T	27.4/73.2
R140	7030003340	S.RES	ERJ3GEYJ 151 V (150)	T	25.9/76.1
R151	7410000950	S.ARR	EXB-V8V 102JV	T	139.9/87.9
R152	7410000950	S.ARR	EXB-V8V 102JV	T	142.8/84.7
R153	7410000950	S.ARR	EXB-V8V 102JV	T	142.8/91.1
R154	7410000950	S.ARR	EXB-V8V 102JV	T	139.9/94.3
R207	7030003640	S.RES	ERJ3GEYJ 473 V (47K)	T	142.2/71
R211	7030003860	S.RES	ERJ3GE JPW V	T	142.2/63.6
R213	7030003860	S.RES	ERJ3GE JPW V	T	144.7/58.3
R214	7030003860	S.RES	ERJ3GE JPW V	T	153.7/58.7
R215	7030003860	S.RES	ERJ3GE JPW V	T	154.9/58.7
R216	7030003520	S.RES	ERJ3GEYJ 472 V (4.7K)	T	162.6/61.7
R217	7030003860	S.RES	ERJ3GE JPW V	T	139.9/60.6
R218	7030003680	S.RES	ERJ3GEYJ 104 V (100K)	T	164.3/75.4
R219	7030003530	S.RES	ERJ3GEYJ 562 V (5.6K)	T	139.4/77.5
R220	7030003590	S.RES	ERJ3GEYJ 183 V (18K)	T	145.7/74.9
R221	7030003470	S.RES	ERJ3GEYJ 182 V (1.8K)	T	146/78.6
R222	7030003800	S.RES	ERJ3GEYJ 105 V (1M)	T	163.6/67.1

M.=Mounted side (T: Mounted on the Top side, B: Mounted on the Bottom side)
S.=Surface mount

[CTRL UNIT]

REF NO.	PARTS NO.	DESCRIPTION	M.	H/V LOCATION
R223	7030003600	S.RES ERJ3GEYJ 223 V (22K)	T	172.5/59
R224	7030003560	S.RES ERJ3GEYJ 103 V (10K)	T	171.7/57.7
R226	7030003560	S.RES ERJ3GEYJ 103 V (10K)	T	153.7/79.2
R227	7030003520	S.RES ERJ3GEYJ 472 V (4.7K)	T	173.5/71.6
R228	7030003560	S.RES ERJ3GEYJ 103 V (10K)	T	173.1/75.4
R229	7030003860	S.RES ERJ3GE JPW V	T	163.1/45.9
R230	7030003440	S.RES ERJ3GEYJ 102 V (1K)	T	156.4/79.4
R231	7030003640	S.RES ERJ3GEYJ 473 V (47K)	T	142.2/69.8
R232	7030010910	S.RES ERJ1TYJ 150U (15)	T	162.8/22.5
R241	7030003380	S.RES ERJ3GEYJ 331 V (330)	T	181.3/73
R242	7030003380	S.RES ERJ3GEYJ 331 V (330)	T	183.9/73.7
R243	7030003380	S.RES ERJ3GEYJ 331 V (330)	T	185.1/73.7
R244	7030003380	S.RES ERJ3GEYJ 331 V (330)	T	188/73
R245	7030003380	S.RES ERJ3GEYJ 331 V (330)	T	180.3/83.2
R246	7030003380	S.RES ERJ3GEYJ 331 V (330)	T	182.1/84
R247	7030003380	S.RES ERJ3GEYJ 331 V (330)	T	183.4/84
R248	7030003380	S.RES ERJ3GEYJ 331 V (330)	T	188.2/84
R261	7030003680	S.RES ERJ3GEYJ 104 V (100K)	T	157.7/12.2
R263	7030003360	S.RES ERJ3GEYJ 221 V (220)	T	147.4/16.6
R264	7030003360	S.RES ERJ3GEYJ 221 V (220)	T	144.6/16.6
R265	7030003400	S.RES ERJ3GEYJ 471 V (470)	T	157.2/15.4
R266	7030003200	S.RES ERJ3GEYJ 100 V (10)	T	134.1/19.8
R267	7030003200	S.RES ERJ3GEYJ 100 V (10)	T	129.9/19.8
R268	7030003200	S.RES ERJ3GEYJ 100 V (10)	T	132.7/19.8
R269	7030003200	S.RES ERJ3GEYJ 100 V (10)	T	128.2/19.8
R270	7030003360	S.RES ERJ3GEYJ 221 V (220)	T	146/16.6
R271	7030003360	S.RES ERJ3GEYJ 221 V (220)	T	148.8/16.6
R272	7030003440	S.RES ERJ3GEYJ 102 V (1K)	T	155.7/16.7
R273	7030003200	S.RES ERJ3GEYJ 100 V (10)	T	135.5/19.8
R274	7030003200	S.RES ERJ3GEYJ 100 V (10)	T	136.9/19.8
R275	7030003200	S.RES ERJ3GEYJ 100 V (10)	T	131.3/19.8
R276	7030003200	S.RES ERJ3GEYJ 100 V (10)	T	126.8/19.8
R277	7030003440	S.RES ERJ3GEYJ 102 V (1K)	T	175.2/17.1
R282	7030003560	S.RES ERJ3GEYJ 103 V (10K)	T	110.2/12.3
R291	7030003440	S.RES ERJ3GEYJ 102 V (1K)	T	166.1/48.6
R292	7030003440	S.RES ERJ3GEYJ 102 V (1K)	T	165.2/45.8
R293	7030003360	S.RES ERJ3GEYJ 221 V (220)	T	106.2/11.4
R298	7030003860	S.RES ERJ3GE JPW V	T	111/74.4
R507	7030003860	S.RES ERJ3GE JPW V	T	108.6/52.1
R508	7030003860	S.RES ERJ3GE JPW V	T	106.9/56.2
C1	4030005040	S.CER C2012 CH 1H 271J-T	T	90.8/56.9
C2	4010005530	CER HM60SJ SL 020C 500V		
C3	4010005530	CER HM60SJ SL 020C 500V		
C5	4610001850	S.TRI TZB4R200AB10R00 (TZBX4R200BA110)	T	102.2/54.9
C6	4030007110	S.CER C1608 CH 1H 680J-T	T	100/49.6
C8	4030011540	S.CER C1608 CH 1H 750J-T	T	99.6/59.9
C9	4030006860	S.CER C1608 JB 1H 102K-T	T	104.9/48.9
C10	4030006880	S.CER C1608 JB 1H 472K-T	T	105.1/56.9
C11	4030006900	S.CER C1608 JB 1H 103K-T	T	116.7/52.1
C12	4030006900	S.CER C1608 JB 1H 103K-T	T	116.2/58.4
C13	4510008540	S.ELE EEE1CA100SR	T	119.8/51.6
C14	4510008540	S.ELE EEE1CA100SR	T	120.6/58.4
C15	4030006900	S.CER C1608 JB 1H 103K-T	T	120.4/48.1
C16	4030006900	S.CER C1608 JB 1H 103K-T	T	120.4/43.3
C21	4010005540	CER HM60SJ SL 030C 500V		
C22	4030007070	S.CER C1608 CH 1H 330J-T	T	97.8/66.4
C23	4030007070	S.CER C1608 CH 1H 330J-T	T	95.1/71.9
C24	4030007070	S.CER C1608 CH 1H 330J-T	T	96.5/66.4
C25	4030006900	S.CER C1608 JB 1H 103K-T	T	98.2/63
C26	4030007120	S.CER C1608 CH 1H 820J-T	T	97.1/70.1
C27	4030006900	S.CER C1608 JB 1H 103K-T	T	100.3/74.8
C28	4030006900	S.CER C1608 JB 1H 103K-T	T	110.2/67.6
C29	4510008540	S.ELE EEE1CA100SR	T	113.3/66.7
C30	4030006900	S.CER C1608 JB 1H 103K-T	T	124.4/74.9
C31	4030006900	S.CER C1608 JB 1H 103K-T	T	130.2/62.8
C32	4550007710	S.TAN TEESVB2 1A 476M8R	T	127.6/58.1
C33	4030007170	S.CER C1608 CH 1H 221J-T	T	127.2/75.5
C34	4030007170	S.CER C1608 CH 1H 221J-T	T	130.8/81.2
C35	4030006900	S.CER C1608 JB 1H 103K-T	T	125.6/83.4
C42	4010005520	CER HM60SJ SL 010C 500V		
C43	4030011570	S.CER CM105 CH 101G 50AT	T	97.3/84.6
C44	4030016550	S.CER CM105 CH 151G 50AT	T	96.7/75.1
C47	4030006900	S.CER C1608 JB 1H 103K-T	T	100.8/84.1
C48	4030006860	S.CER C1608 JB 1H 102K-T	T	100.8/81.3
C49	4030006900	S.CER C1608 JB 1H 103K-T	T	105.7/83.4
C50	4030006900	S.CER C1608 JB 1H 103K-T	T	99.8/77.1
C51	4030006900	S.CER C1608 JB 1H 103K-T	T	124.2/83.2
C52	4030006900	S.CER C1608 JB 1H 103K-T	T	109.4/83.5
C53	4030007170	S.CER C1608 CH 1H 221J-T	T	121.3/83.2
C54	4030007170	S.CER C1608 CH 1H 221J-T	T	111/85.7
C55	4030006900	S.CER C1608 JB 1H 103K-T	T	118.3/84.5
C56	4030011340	S.CER C1608 CH 1H 471J-T	T	124/85.8
C57	4030011340	S.CER C1608 CH 1H 471J-T	T	113.9/87.2
C59	4030006880	S.CER C1608 JB 1H 472K-T	T	110.6/83.5
C60	4030006900	S.CER C1608 JB 1H 103K-T	T	115.4/76.3
C81	4030006860	S.CER C1608 JB 1H 102K-T	T	32.9/11.6
C83	4030006860	S.CER C1608 JB 1H 102K-T	T	51.8/10.2
C84	4030006860	S.CER C1608 JB 1H 102K-T	T	52.4/12.4
C85	4030011600	S.CER C1608 JB 1E 104K-T	T	53.7/8
C86	4030007130	S.CER C1608 CH 1H 101J-T	T	39/11.7
C102	4030006900	S.CER C1608 JB 1H 103K-T	T	13.9/17.7
C103	4030006900	S.CER C1608 JB 1H 103K-T	T	36.6/54
C105	4030011600	S.CER C1608 JB 1E 104K-T	T	13.8/69.8
C108	4030007070	S.CER C1608 CH 1H 330J-T	T	19.4/70.1
C109	4030011540	S.CER C1608 CH 1H 750J-T	T	13.8/65.4
C110	4030006900	S.CER C1608 JB 1H 103K-T	T	65.4/91.3
C111	4030007120	S.CER C1608 CH 1H 820J-T	T	19.4/63.1
C112	4030007030	S.CER C1608 CH 1H 150J-T	T	14.6/57.1
C114	4030007090	S.CER C1608 CH 1H 470J-T	T	19.3/57.1
C115	4030011600	S.CER C1608 JB 1E 104K-T	T	26.6/45.4
C117	4030006900	S.CER C1608 JB 1H 103K-T	T	38.6/35.9

[CTRL UNIT]

REF NO.	PARTS NO.	DESCRIPTION	M.	H/V LOCATION
C118	4030006900	S.CER C1608 JB 1H 103K-T	T	76.9/16.5
C135	4030018790	S.CER C3225 JB 2E 104K-T	T	59.6/84.1
C136	4030018790	S.CER C3225 JB 2E 104K-T	T	59.2/61.6
C137	4030006860	S.CER C1608 JB 1H 102K-T	T	32.5/83
C138	4030006860	S.CER C1608 JB 1H 102K-T	T	35/66.5
C139	4030011600	S.CER C1608 JB 1E 104K-T	T	33.7/83
C140	4030011600	S.CER C1608 JB 1E 104K-T	T	33.7/66.5
C141	4030006880	S.CER C1608 JB 1H 472K-T	T	32.5/66.5
C142	4030018960	S.CER C3216 JB 1C 106MT-N	T	25.1/86.1
C143	4030018960	S.CER C3216 JB 1C 106MT-N	T	26.2/64.1
C151	4030006900	S.CER C1608 JB 1H 103K-T	T	134/89.1
C152	4030006900	S.CER C1608 JB 1H 103K-T	T	131.2/88.3
C153	4030006900	S.CER C1608 JB 1H 103K-T	T	134/87.5
C154	4030006900	S.CER C1608 JB 1H 103K-T	T	131.2/86.7
C155	4030006900	S.CER C1608 JB 1H 103K-T	T	134/85.9
C156	4030006900	S.CER C1608 JB 1H 103K-T	T	131.2/85.1
C157	4030006900	S.CER C1608 JB 1H 103K-T	T	134/84.3
C158	4030006900	S.CER C1608 JB 1H 103K-T	T	131.2/83.5
C159	4030006900	S.CER C1608 JB 1H 103K-T	T	131.2/89.9
C160	4030006900	S.CER C1608 JB 1H 103K-T	T	134/90.7
C161	4030006900	S.CER C1608 JB 1H 103K-T	T	131.2/91.5
C162	4030006900	S.CER C1608 JB 1H 103K-T	T	134/92.3
C163	4030006900	S.CER C1608 JB 1H 103K-T	T	131.2/93.1
C164	4030006900	S.CER C1608 JB 1H 103K-T	T	134/93.9
C165	4030006900	S.CER C1608 JB 1H 103K-T	T	131.2/94.7
C201	4030006900	S.CER C1608 JB 1H 103K-T	T	146.1/58.3
C202	4030006900	S.CER C1608 JB 1H 103K-T	T	147.3/58.3
C203	4030006900	S.CER C1608 JB 1H 103K-T	T	149.7/58.3
C204	4030006900	S.CER C1608 JB 1H 103K-T	T	152.1/58.3
C205	4030011600	S.CER C1608 JB 1E 104K-T	T	159/57.4
C206	4030006900	S.CER C1608 JB 1H 103K-T	T	145.7/76.1
C207	4510008870	S.ELE EEE1AA471UP	T	154.3/43.8
C208	4030011600	S.CER C1608 JB 1E 104K-T	T	174.4/59.7
C209	4030011600	S.CER C1608 JB 1E 104K-T	T	164.1/36.6
C210	4030007020	S.CER C1608 CH 1H 120J-T	T	163.1/69.7
C211	4030007020	S.CER C1608 CH 1H 120J-T	T	162.4/67.1
C212	4030006900	S.CER C1608 JB 1H 103K-T	T	167.7/89.5
C213	4510008510	S.ELE EEE1CA471P	T	169/29.8
C215	4030006900	S.CER C1608 JB 1H 103K-T	T	150/88.1
C221	4030011600	S.CER C1608 JB 1E 104K-T	T	161.8/69.7
C222	4030011600	S.CER C1608 JB 1E 104K-T	T	160.1/30.8
C223	4030011600	S.CER C1608 JB 1E 104K-T	T	104.6/38
C241	4510008550	S.ELE EEE1HA010SR	T	186.7/56
C242	4510008550	S.ELE EEE1HA010SR	T	186.7/51.2
C243	4510008550	S.ELE EEE1HA010SR	T	186.7/46.4
C244	4510008550	S.ELE EEE1HA010SR	T	186.7/41.6
C245	4510008550	S.ELE EEE1HA010SR	T	186.7/36.8
C246	4510008550	S.ELE EEE1HA010SR	T	186.7/32
C247	4510008550	S.ELE EEE1HA010SR	T	186.7/27.2
C248	4510008550	S.ELE EEE1HA010SR	T	186.7/22.4
C251	4030011600	S.CER C1608 JB 1E 104K-T	T	174.5/86.1
C261	4510008540	S.ELE EEE1CA100SR	T	147/38.8
C262	4030006900	S.CER C1608 JB 1H 103K-T	T	147/35.6
C266	4030006900	S.CER C1608 JB 1H 103K-T	T	122/12.9
C267	4030006900	S.CER C1608 JB 1H 103K-T	T	126.8/15.8
C268	4030006900	S.CER C1608 JB 1H 103K-T	T	132.7/15.8
C269	4030006900	S.CER C1608 JB 1H 103K-T	T	136.9/15.8
C270	4030006900	S.CER C1608 JB 1H 103K-T	T	129.9/15.8
C271	4030006900	S.CER C1608 JB 1H 103K-T	T	135.5/15.8
C272	4030006900	S.CER C1608 JB 1H 103K-T	T	134.1/15.8
C273	4030006900	S.CER C1608 JB 1H 103K-T	T	131.3/15.8
C274	4030006900	S.CER C1608 JB 1H 103K-T	T	128.2/15.8
C281	4030006900	S.CER C1608 JB 1H 103K-T	T	168.4/11.8
C282	4030006900	S.CER C1608 JB 1H 103K-T	T	142.5/10.4
C283	4030019500	S.CER GRM21BB31A106KE18 (GRM40 B)	T	168.7/19.3
C284	4030019500	S.CER GRM21BB31A106KE18 (GRM40 B)	T	172/19.3
RL101	6330000800	REL G5A-237P DC12V		
RL102	6330001770	REL SIP-1A-12Y		
RL103	6330001770	REL SIP-1A-12Y		
RL104	6330001460	REL FTR-F1CA012V		
RL105	6330001460	REL FTR-F1CA012V		
CP1	6910009670	S.CHE HK3-S-T	T	111.6/45.9
J3	6510017150	CON TMP-S01X-C1		
J101	6510017150	CON TMP-S01X-C1		
J102	6510017150	CON TMP-S01X-C1		
J103	6510017150	CON TMP-S01X-C1		
J151	6510022591	S.CON 22FMN-BMTTR-A-TBT(LF)(SN)	T	111.6/92.7
J241	6510022031	S.CON B10B-ZR-SM4-TF(LF)(SN)	T	180.2/42.9
J261	6510022621	S.CON 10FMN-BMTTR-A-TBT(LF)(SN)	T	132.3/8.4
J262	6510022581	S.CON 24FMN-BMTTR-A-TBT(LF)(SN)	T	158.2/8.4
J291	6510018971	S.CON B4B-PH-SM4-TB(LF)(SN)	T	171.8/46.8
W1	7120000490	JUM ERD25T0		
W2	7120000490	JUM ERD25T0		
EP131	6910014690	S.BEA MPZ1608S221A-T	T	31/79.6
EP132	6910014690	S.BEA MPZ1608S221A-T	T	24.3/54.9
EP263	6910014730	S.BEA MPZ2012S331A-T	T	159.7/15.7
EP264	6910014730	S.BEA MPZ2012S331A-T	T	162.5/17.8
EP265	6910014730	S.BEA MPZ2012S331A-T	T	167.7/16.5
EP267	6910014690	S.BEA MPZ1608S221A-T	T	142.5/8.4
EP268	6910014730	S.BEA MPZ2012S331A-T	T	165.7/16
EP269	6910014730	S.BEA MPZ2012S331A-T	T	106.2/9
EP270	6910014730	S.BEA MPZ2012S331A-T	T	110.2/10.2

M.=Mounted side (T: Mounted on the Top side, B: Mounted on the Bottom side)
S.=Surface mount

[TUNER UNIT]

REF NO.	PARTS NO.	DESCRIPTION		M.	H/V LOCATION
Q1	1590003680	S.TRA	KRC402 RTK/P	T	124.5/89
Q2	1590003680	S.TRA	KRC402 RTK/P	T	104.5/78.3
Q3	1590003680	S.TRA	KRC402 RTK/P	T	77.6/60.7
Q4	1590003680	S.TRA	KRC402 RTK/P	T	72.1/60.7
Q5	1590003680	S.TRA	KRC402 RTK/P	T	66.6/60.7
Q6	1590003680	S.TRA	KRC402 RTK/P	T	61.1/60.7
Q7	1590003680	S.TRA	KRC402 RTK/P	T	57/60.7
Q8	1590003680	S.TRA	KRC402 RTK/P	T	53.2/60.7
Q9	1590003680	S.TRA	KRC402 RTK/P	T	53/78
Q10	1590003680	S.TRA	KRC402 RTK/P	T	108.9/81
Q11	1590003680	S.TRA	KRC402 RTK/P	T	91/78.2
Q12	1590003680	S.TRA	KRC402 RTK/P	T	114.4/81
Q13	1590003680	S.TRA	KRC402 RTK/P	T	95.5/78.2
Q14	1590003680	S.TRA	KRC402 RTK/P	T	119.4/81
Q15	1590003680	S.TRA	KRC402 RTK/P	T	100/78.2
Q16	1590003680	S.TRA	KRC402 RTK/P	T	49.8/70.2
D1	1750001180	S.DIO	KDS122 RTK/P	T	124.5/85
D2	1750001180	S.DIO	KDS122 RTK/P	T	103/75.7
D3	1750001180	S.DIO	KDS122 RTK/P	T	77.6/56.7
D4	1750001180	S.DIO	KDS122 RTK/P	T	72.1/56.7
D5	1750001180	S.DIO	KDS122 RTK/P	T	66.6/56.7
D6	1750001180	S.DIO	KDS122 RTK/P	T	61.1/56.7
D7	1750001180	S.DIO	KDS122 RTK/P	T	57/56.7
D8	1750001180	S.DIO	KDS122 RTK/P	T	53.2/56.7
D9	1750001180	S.DIO	KDS122 RTK/P	T	49/76.2
D10	1750001180	S.DIO	KDS122 RTK/P	T	108.9/77.1
D11	1750001180	S.DIO	KDS122 RTK/P	T	89.5/75.7
D12	1750001180	S.DIO	KDS122 RTK/P	T	114.4/77.1
D13	1750001180	S.DIO	KDS122 RTK/P	T	94/75.7
D14	1750001180	S.DIO	KDS122 RTK/P	T	119.4/77.1
D15	1750001180	S.DIO	KDS122 RTK/P	T	98.5/75.7
D16	1750001180	S.DIO	KDS122 RTK/P	T	49.8/66.2
L3	6110003600	COI	LA-555		
L4	6110003590	COI	LA-554		
L5	6110003020	COI	LA-489		
L6	6110003030	COI	LA-490		
L7	6110003020	COI	LA-489		
L8	6110003030	COI	LA-490		
L9	6140004520	COI	LR-511		
L10	6140004510	COI	LR-510		
L11	6140002700	COI	LR-307 (T130-2)		
L12	6140002700	COI	LR-307 (T130-2)		
L13	6180003291	COI	BM27-400-6A-LF		
L14	6180003291	COI	BM27-400-6A-LF		
L15	6180003291	COI	BM27-400-6A-LF		
L16	6180003291	COI	BM27-400-6A-LF		
L17	6180003291	COI	BM27-400-6A-LF		
L18	6180003291	COI	BM27-400-6A-LF		
L19	6180003291	COI	BM27-400-6A-LF		
L20	6180003291	COI	BM27-400-6A-LF		
R46	7410000950	S.ARR	EXB-V8V 102JV	T	106.8/88.5
R47	7410000950	S.ARR	EXB-V8V 102JV	T	110.8/88.5
R48	7410000950	S.ARR	EXB-V8V 102JV	T	94.8/88.5
R49	7410000950	S.ARR	EXB-V8V 102JV	T	98.8/88.5
C3	4010005130	CER	DEC1X3J470JC4B (DE0910SL470J)		
C4	4010004790	CER	DEC1X3J680JC4B (DE1210SL680J)		
C11	4030006900	S.CER	C1608 JB 1H 103K-T	T	123.3/82.7
C12	4030006900	S.CER	C1608 JB 1H 103K-T	T	124.6/87
C13	4030006900	S.CER	C1608 JB 1H 103K-T	T	109/84
C17	4030006900	S.CER	C1608 JB 1H 103K-T	T	124.5/93.7
C19	4030006900	S.CER	C1608 JB 1H 103K-T	T	89/91.3
C21	4030006900	S.CER	C1608 JB 1H 103K-T	T	102.1/71.7
C22	4030006900	S.CER	C1608 JB 1H 103K-T	T	120.3/5.4
C31	4030006900	S.CER	C1608 JB 1H 103K-T	T	76.5/54.7
C32	4030006900	S.CER	C1608 JB 1H 103K-T	T	77.8/58.7
C33	4030006900	S.CER	C1608 JB 1H 103K-T	T	100/84
C34	4010008550	CER	DEA1X3F390JC3B (DE0607SL390J)		
C35	4010008550	CER	DEA1X3F390JC3B (DE0607SL390J)		
C36	4010004800	CER	DEC1X3J820JC4B (DE1210SL820J)		
C37	4010004780	CER	DEC1X3J560JC4B (DE1010SL560J)		
C38	4010004830	CER	DEC1X3J151JC4B (DE1510SL151J)		
C39	4010008560	CER	DEA1X3F151JA3B (DE1107SL151J)		
C40	4010008690	CER	DEA1X3F101JA3B		
C41	4010004820	CER	DEC1X3J121JC4B (DE1410SL121J)		
C42	4010004790	CER	DEC1X3J680JC4B (DE1210SL680J)		
C43	4010004790	CER	DEC1X3J680JC4B (DE1210SL680J)		
C44	4620000160	VAR	KV-150-05 150P		
C45	4620000160	VAR	KV-150-05 150P		
C46	4030006900	S.CER	C1608 JB 1H 103K-T	T	71/54.7
C47	4030006900	S.CER	C1608 JB 1H 103K-T	T	72.3/58.7
C48	4030006900	S.CER	C1608 JB 1H 103K-T	T	98.7/84
C51	4030006900	S.CER	C1608 JB 1H 103K-T	T	65.5/54.7
C52	4030006900	S.CER	C1608 JB 1H 103K-T	T	66.8/58.7
C53	4030006900	S.CER	C1608 JB 1H 103K-T	T	97.5/84
C61	4030006900	S.CER	C1608 JB 1H 103K-T	T	60/54.7

[TUNER UNIT]

REF NO.	PARTS NO.	DESCRIPTION		M.	H/V LOCATION
C62	4030006900	S.CER	C1608 JB 1H 103K-T	T	61.3/58.7
C63	4030006900	S.CER	C1608 JB 1H 103K-T	T	96.2/84
C71	4030006900	S.CER	C1608 JB 1H 103K-T	T	55.8/54.7
C72	4030006900	S.CER	C1608 JB 1H 103K-T	T	57.1/58.7
C73	4030006900	S.CER	C1608 JB 1H 103K-T	T	95/84
C81	4030006900	S.CER	C1608 JB 1H 103K-T	T	52/54.7
C82	4030006900	S.CER	C1608 JB 1H 103K-T	T	53.3/58.7
C83	4030006900	S.CER	C1608 JB 1H 103K-T	T	93.7/84
C91	4030006900	S.CER	C1608 JB 1H 103K-T	T	51.2/74.5
C92	4030006900	S.CER	C1608 JB 1H 103K-T	T	51/77.8
C93	4030006900	S.CER	C1608 JB 1H 103K-T	T	91.2/84
C101	4030006900	S.CER	C1608 JB 1H 103K-T	T	107.7/75.2
C102	4030006900	S.CER	C1608 JB 1H 103K-T	T	109/79
C103	4030006900	S.CER	C1608 JB 1H 103K-T	T	110.2/84
C111	4030006900	S.CER	C1608 JB 1H 103K-T	T	88.6/71.7
C112	4030006900	S.CER	C1608 JB 1H 103K-T	T	102.6/5.4
C113	4030006900	S.CER	C1608 JB 1H 103K-T	T	105.2/84
C121	4030006900	S.CER	C1608 JB 1H 103K-T	T	113.2/75.2
C122	4030006900	S.CER	C1608 JB 1H 103K-T	T	114.5/79
C123	4030006900	S.CER	C1608 JB 1H 103K-T	T	111.5/84
C131	4030006900	S.CER	C1608 JB 1H 103K-T	T	93.1/71.7
C132	4030006900	S.CER	C1608 JB 1H 103K-T	T	107.4/5.4
C133	4030006900	S.CER	C1608 JB 1H 103K-T	T	106.5/84
C141	4030006900	S.CER	C1608 JB 1H 103K-T	T	118.2/75.2
C142	4030006900	S.CER	C1608 JB 1H 103K-T	T	119.5/79
C143	4030006900	S.CER	C1608 JB 1H 103K-T	T	112.7/84
C151	4030006900	S.CER	C1608 JB 1H 103K-T	T	97.6/71.7
C152	4030006900	S.CER	C1608 JB 1H 103K-T	T	115.3/5.4
C153	4030006900	S.CER	C1608 JB 1H 103K-T	T	107.7/84
C161	4030006900	S.CER	C1608 JB 1H 103K-T	T	48.7/64.2
C162	4030006900	S.CER	C1608 JB 1H 103K-T	T	50/68.2
C163	4030006900	S.CER	C1608 JB 1H 103K-T	T	92.5/84
RL1	6330001610	REL	NY-12W-K-IE		
RL2	6330001610	REL	NY-12W-K-IE		
RL3	6330001610	REL	NY-12W-K-IE		
RL4	6330001610	REL	NY-12W-K-IE		
RL5	6330001610	REL	NY-12W-K-IE		
RL6	6330001610	REL	NY-12W-K-IE		
RL7	6330001610	REL	NY-12W-K-IE		
RL8	6330001610	REL	NY-12W-K-IE		
RL9	6330001610	REL	NY-12W-K-IE		
RL10	6330001610	REL	NY-12W-K-IE		
RL11	6330001610	REL	NY-12W-K-IE		
RL12	6330001610	REL	NY-12W-K-IE		
RL13	6330001610	REL	NY-12W-K-IE		
RL14	6330001610	REL	NY-12W-K-IE		
RL15	6330001610	REL	NY-12W-K-IE		
RL16	6330001610	REL	NY-12W-K-IE		
J3	6510007020	CON	TMP-J01X-V6		
J4	6510007020	CON	TMP-J01X-V6		
J5	6510022591	S.CON	22FMN-BMTTR-A-TBT(LF)(SN)	T	102.9/93.3
MF1	2710000800	MOT	MP24ZA		
MF2	2710000800	MOT	MP24ZA		
W1	8900018420	CAB	OPC-1889		
EP2	6910014730	S.BEA	MPZ2012S331A-T	T	87.1/91.6
EP4	6910014730	S.BEA	MPZ2012S331A-T	T	122.7/92.1

[FRONT UNIT]

REF NO.	PARTS NO.	DESCRIPTION		M.	H/V LOCATION
W1	8900018460	CAB	OPC-1950 (P1,N10,L60) <TJM>		
W2	8900009231	CAB	OPC-908A (P1,N10,L60) <TJM>		
W3	8900017820	CAB	OPC-852A (P1,N16,L60) <TJM>		
W4	8900009231	CAB	OPC-908A (P1,N10,L60) <TJM>		
W5	8900009231	CAB	OPC-908A (P1,N10,L60) <TJM>		
W6	8900009231	CAB	OPC-908A (P1,N10,L60) <TJM>		
W7	8900018480	CAB	OPC-1952 (P0.5,N30,L65) <TJM>		
W8	8900018480	CAB	OPC-1952 (P0.5,N30,L65) <TJM>		
EP1	6910020500	E.O	RMS20-250-201-1B (-1P/E)		
EP2	6910015650	E.O	S-G2218-3#01 (MOUNT PLATE)		
EP3	6910015650	E.O	S-G2218-3#01 (MOUNT PLATE)		

M.=Mounted side (T: Mounted on the Top side, B: Mounted on the Bottom side)
S.=Surface mount

[DISPLAY UNIT]

REF NO.	PARTS NO.	DESCRIPTION		M.	H/V LOCATION
IC1	1130011510	S.IC	BU2099FV-E2	B	146.1/95.4
IC11	1130011880	S.IC	CD4051BPWR	B	46.3/40.8
IC12	1130011880	S.IC	CD4051BPWR	B	96.3/37.2
IC13	1130011880	S.IC	CD4051BPWR	B	81/39.9
IC51	1130011551	S.IC	RX-4581NB-F	B	105.1/66.7
IC61	1130012620	S.IC	SN74AHCT1G86DCKR	B	109.5/82.4
IC101	1140014421	S.IC	M30622M6P-535GP(SX-3009B-1)	B	131.3/39.6
IC151	1110005731	S.IC	S-80928CNMC-G8Y-G	B	82.9/61.6
IC171	1130013470	S.IC	CD4071BNSR	B	292.9/50.9
IC304	1120003080	S.IC	ADD8505WRUZ-REEL7 <FE>	B	196.5/74
IC305	1120003080	S.IC	ADD8505WRUZ-REEL7 <FE>	B	196.5/66.3
IC406	1180003360	S.REG	R1211N002B-TR-F	B	139.2/78.3
IC431	1110002700	S.IC	NJM2904M-TE1-#FMZB	B	52.6/97.2
IC452	1130014580	S.IC	L5Z30673P00	B	167.4/77.4
IC603	1180003370	S.REG	BD6067GU-E2	B	269.5/70.7
IC604	1180003370	S.REG	BD6067GU-E2	B	249.4/70.7
Q1	1590003770	S.TRA	KRA302E-RTK/P	B	9.7/95.3
Q2	1590003680	S.TRA	KRC402 RTK/P	B	12.7/94.9
Q3	1590003680	S.TRA	KRC402 RTK/P	B	76.3/89.8
Q31	1590003680	S.TRA	KRC402 RTK/P	B	45.5/53.3
Q51	1590003680	S.TRA	KRC402 RTK/P	B	107.1/58
Q52	1510000771	S.TRA	2SA1586-GR(TE85L,F)	B	102.6/58.4
Q61	1520000651	S.TRA	2SB1201S-TL-E	B	101.7/89.2
Q62	1530003900	S.TRA	KTC4075 BL-RTK/P	B	103.9/82.6
Q101	1590003680	S.TRA	KRC402 RTK/P	B	148/62.5
Q102	1590003680	S.TRA	KRC402 RTK/P	B	148/65.1
Q103	1560001260	S.FET	2SK3018 T106	B	13.2/97.4
Q181	1560001260	S.FET	2SK3018 T106	B	120.7/62.4
Q182	1510000771	S.TRA	2SA1586-GR(TE85L,F)	B	118.6/60
Q401	1560001660	S.FET	RUF015N02 TL	B	137.1/82.1
Q403	1590003680	S.TRA	KRC402 RTK/P	B	113.8/72
Q404	1550000160	S.FET	CPH3313-TL-E	B	117.6/71.8
Q405	1590003770	S.TRA	KRA302E-RTK/P	B	120.4/92.5
Q406	1590003680	S.TRA	KRC402 RTK/P	B	123.2/93.9
D31	1750001710	S.DIO	RB751V-40 TE-17	B	37.1/54.7
D32	1750001180	S.DIO	KDS122 RTK/P	B	75/69.5
D33	1750001180	S.DIO	KDS122 RTK/P	B	75/66.9
D51	1750001320	S.DIO	KDS4148U RTK/P	B	101.6/61
D61	1730002591	S.ZEN	MAZ8033GHL	B	101.8/82.7
D101	1750001710	S.DIO	RB751V-40 TE-17	B	134.6/28.6
D401	1750000880	S.DIO	RB551V-30TE-17	B	131.7/76.7
D402	1750001180	S.DIO	KDS122 RTK/P	B	128/82.2
D403	1750001180	S.DIO	KDS122 RTK/P	B	128/79.2
D404	1750001180	S.DIO	KDS122 RTK/P	B	128/91.2
D405	1750001180	S.DIO	KDS122 RTK/P	B	128/88.2
D406	1750001180	S.DIO	KDS122 RTK/P	B	128/85.2
D407	1750001320	S.DIO	KDS4148U RTK/P	B	118.1/94.2
D601	1790001450	S.DIO	RB160L-40 TE-25	B	263.3/80.6
D602	1790001450	S.DIO	RB160L-40 TE-25	B	242.4/80.5
D603	1730002531	S.ZEN	NNCD6.2G-T1-A	B	285.5/8.9
X101	6050011550	S.XTA	CR-747 SMD-49TA 9.8304 MHz	B	110.9/39.6
L51	6200005011	S.COI	NLV25T-100J	B	98.1/56.3
L151	6200005011	S.COI	NLV25T-100J	B	198.5/88.9
L152	6200005011	S.COI	NLV25T-100J	B	199/102.1
L401	6200013500	S.COI	CDRH4D16NP-680MC 68U	B	135.5/86.7
L402	6200001981	S.COI	NLV25T-1R0J	B	123.8/74.1
L602	6200013510	S.COI	CDRH4D16NP-220MC 22U	B	261.5/75.2
L603	6200013510	S.COI	CDRH4D16NP-220MC 22U	B	239.9/75.4
R1	7030003360	S.RES	ERJ3GEYJ 221 V (220)	B	9.9/98
R2	7030003540	S.RES	ERJ3GEYJ 682 V (6.8K)	B	63.8/54.5
R3	7030003540	S.RES	ERJ3GEYJ 682 V (6.8K)	B	63.8/88.7
R4	7030003540	S.RES	ERJ3GEYJ 682 V (6.8K)	B	26.7/77
R5	7030003440	S.RES	ERJ3GEYJ 102 V (1K)	B	65.2/50
R6	7030003440	S.RES	ERJ3GEYJ 102 V (1K)	B	65.2/84.5
R7	7030003440	S.RES	ERJ3GEYJ 102 V (1K)	B	28.9/79.2
R8	7030003440	S.RES	ERJ3GEYJ 102 V (1K)	B	9.5/92.5
R9	7030003440	S.RES	ERJ3GEYJ 102 V (1K)	B	9.5/86.2
R11	7030003460	S.RES	ERJ3GEYJ 152 V (1.5K)	B	10/40.6
R13	7030003440	S.RES	ERJ3GEYJ 102 V (1K)	B	33.2/47.2
R14	7030003440	S.RES	ERJ3GEYJ 102 V (1K)	B	35.7/48.2
R15	7030003440	S.RES	ERJ3GEYJ 102 V (1K)	B	33.2/49.2
R16	7030003440	S.RES	ERJ3GEYJ 102 V (1K)	B	35.7/50.2
R17	7030003440	S.RES	ERJ3GEYJ 102 V (1K)	B	58.7/33.7
R18	7030003440	S.RES	ERJ3GEYJ 102 V (1K)	B	59.9/33.7
R19	7030003440	S.RES	ERJ3GEYJ 102 V (1K)	B	61.1/33.7
R20	7030003440	S.RES	ERJ3GEYJ 102 V (1K)	B	62.3/33.7
R21	7030003860	S.RES	ERJ3GE JPW V	B	9/37.6
R22	7030003860	S.RES	ERJ3GE JPW V	B	11/37.1
R23	7030003540	S.RES	ERJ3GEYJ 682 V (6.8K)	B	100.4/30.4
R24	7030003860	S.RES	ERJ3GE JPW V	B	98.3/43.9
R25	7030003860	S.RES	ERJ3GE JPW V	B	97/43.9
R26	7030003540	S.RES	ERJ3GEYJ 682 V (6.8K)	B	81.3/32
R27	7030003540	S.RES	ERJ3GEYJ 682 V (6.8K)	B	83.8/32
R31	7030003860	S.RES	ERJ3GE JPW V	B	67.7/70
R32	7030003860	S.RES	ERJ3GE JPW V	B	67.7/71.2
R36	7030003860	S.RES	ERJ3GE JPW V	B	42.4/83.1
R37	7030003860	S.RES	ERJ3GE JPW V	B	70.5/71.2
R39	7030003440	S.RES	ERJ3GEYJ 102 V (1K)	B	71/72.6
R40	7030003440	S.RES	ERJ3GEYJ 102 V (1K)	B	71.2/68.2
R41	7030003440	S.RES	ERJ3GEYJ 102 V (1K)	B	71.2/67
R42	7030003560	S.RES	ERJ3GEYJ 103 V (10K)	B	43.2/54.1
R51	7030003860	S.RES	ERJ3GE JPW V	B	109.1/57.8
R52	7030003520	S.RES	ERJ3GEYJ 472 V (4.7K)	B	105.1/58.1
R53	7030003640	S.RES	ERJ3GEYJ 473 V (47K)	B	104.1/61.4

[DISPLAY UNIT]

REF NO.	PARTS NO.	DESCRIPTION		M.	H/V LOCATION
R54	7030003560	S.RES	ERJ3GEYJ 103 V (10K)	B	106.1/61.4
R61	7030003640	S.RES	ERJ3GEYJ 473 V (47K)	B	111.8/82.4
R62	7030003580	S.RES	ERJ3GEYJ 153 V (15K)	B	106.6/81.7
R63	7030003660	S.RES	ERJ3GEYJ 683 V (68K)	B	106.6/84.4
R64	7030003360	S.RES	ERJ3GEYJ 221 V (220)	B	103.3/79.6
R65	7030008240	S.RES	ERJ12Y0R00U	B	94.5/85.8
R71	7030003560	S.RES	ERJ3GEYJ 103 V (10K)	B	288/79.5
R72	7030003560	S.RES	ERJ3GEYJ 103 V (10K)	B	290.5/79.5
R73	7030003560	S.RES	ERJ3GEYJ 103 V (10K)	B	289.2/79.5
R74	7030003560	S.RES	ERJ3GEYJ 103 V (10K)	B	291.7/79.5
R75	7030003440	S.RES	ERJ3GEYJ 102 V (1K)	B	286.7/73.8
R76	7030003440	S.RES	ERJ3GEYJ 102 V (1K)	B	289.2/72.8
R77	7030003440	S.RES	ERJ3GEYJ 102 V (1K)	B	286.7/71.8
R78	7030003440	S.RES	ERJ3GEYJ 102 V (1K)	B	289.2/70.8
R79	7030003440	S.RES	ERJ3GEYJ 102 V (1K)	B	286.7/69.8
R80	7030003440	S.RES	ERJ3GEYJ 102 V (1K)	B	289.2/68.8
R81	7030003440	S.RES	ERJ3GEYJ 102 V (1K)	B	283/37.7
R82	7030003440	S.RES	ERJ3GEYJ 102 V (1K)	B	304.5/66.7
R83	7030003440	S.RES	ERJ3GEYJ 102 V (1K)	B	270.5/100.5
R84	7030003440	S.RES	ERJ3GEYJ 102 V (1K)	B	254.7/100.5
R85	7030003440	S.RES	ERJ3GEYJ 102 V (1K)	B	239/100.5
R86	7030003440	S.RES	ERJ3GEYJ 102 V (1K)	B	226.4/100.2
R87	7030003440	S.RES	ERJ3GEYJ 102 V (1K)	B	145.7/36.7
R88	7030003440	S.RES	ERJ3GEYJ 102 V (1K)	B	142.9/36
R89	7030003440	S.RES	ERJ3GEYJ 102 V (1K)	B	143/34.5
R90	7030003440	S.RES	ERJ3GEYJ 102 V (1K)	B	145.7/35.2
R91	7030003440	S.RES	ERJ3GEYJ 102 V (1K)	B	145.7/38.2
R92	7030003440	S.RES	ERJ3GEYJ 102 V (1K)	B	143/37.5
R93	7030003440	S.RES	ERJ3GEYJ 102 V (1K)	B	145.7/42.2
R94	7030003440	S.RES	ERJ3GEYJ 102 V (1K)	B	143/33
R101	7030004730	S.RES	ERJ3GEYF 222 V (2.2K)	B	130.1/27.6
R102	7030003640	S.RES	ERJ3GEYJ 473 V (47K)	B	132.1/28.2
R104	7030003680	S.RES	ERJ3GEYJ 104 V (100K)	B	123.5/28.7
R105	7030003680	S.RES	ERJ3GEYJ 104 V (100K)	B	122.7/30.8
R106	7030003800	S.RES	ERJ3GEYJ 105 V (1M)	B	114.3/39.5
R107	7030003640	S.RES	ERJ3GEYJ 473 V (47K)	B	129.4/53
R108	7030003640	S.RES	ERJ3GEYJ 473 V (47K)	B	130.6/53
R109	7030003560	S.RES	ERJ3GEYJ 103 V (10K)	B	125.2/53
R110	7030003640	S.RES	ERJ3GEYJ 473 V (47K)	B	134.7/50.4
R111	7030003860	S.RES	ERJ3GE JPW V	B	128/28.3
R113	7030003670	S.RES	ERJ3GEYJ 823 V (82K)	B	274.3/13.6
R115	7030003670	S.RES	ERJ3GEYJ 823 V (82K)	B	273/13.6
R118	7030003640	S.RES	ERJ3GEYJ 473 V (47K)	B	273.8/11.7
R119	7030003640	S.RES	ERJ3GEYJ 473 V (47K)	B	273.7/9.7
R121	7030003440	S.RES	ERJ3GEYJ 102 V (1K)	B	132.5/53.2
R122	7030003440	S.RES	ERJ3GEYJ 102 V (1K)	B	133.2/50.5
R123	7030003440	S.RES	ERJ3GEYJ 102 V (1K)	B	134/53.2
R124	7030003440	S.RES	ERJ3GEYJ 102 V (1K)	B	135.5/53.2
R125	7030003440	S.RES	ERJ3GEYJ 102 V (1K)	B	136.2/50.4
R126	7030003440	S.RES	ERJ3GEYJ 102 V (1K)	B	137/53.2
R127	7030003440	S.RES	ERJ3GEYJ 102 V (1K)	B	137.7/50.4
R128	7030003440	S.RES	ERJ3GEYJ 102 V (1K)	B	138.5/53.2
R129	7030003440	S.RES	ERJ3GEYJ 102 V (1K)	B	145.7/46.7
R130	7030003440	S.RES	ERJ3GEYJ 102 V (1K)	B	142.9/46
R131	7030003440	S.RES	ERJ3GEYJ 102 V (1K)	B	145.7/45.2
R132	7030003440	S.RES	ERJ3GEYJ 102 V (1K)	B	142.9/44.5
R133	7030003440	S.RES	ERJ3GEYJ 102 V (1K)	B	142.9/43
R134	7030003440	S.RES	ERJ3GEYJ 102 V (1K)	B	145.7/43.7
R135	7030003440	S.RES	ERJ3GEYJ 102 V (1K)	B	145.7/33.7
R141	7030003680	S.RES	ERJ3GEYJ 104 V (100K)	B	61/44.6
R142	7030003440	S.RES	ERJ3GEYJ 102 V (1K)	B	58/43.9
R143	7030003440	S.RES	ERJ3GEYJ 102 V (1K)	B	61/45.9
R144	7030003320	S.RES	ERJ3GEYJ 101 V (100)	B	61/47.1
R145	7030003440	S.RES	ERJ3GEYJ 102 V (1K)	B	58/48.7
R146	7030003440	S.RES	ERJ3GEYJ 102 V (1K)	B	58/50
R147	7030003440	S.RES	ERJ3GEYJ 102 V (1K)	B	58/51.2
R148	7030003440	S.RES	ERJ3GEYJ 102 V (1K)	B	58/52.5
R149	7030003440	S.RES	ERJ3GEYJ 102 V (1K)	B	58/53.7
R151	7030003650	S.RES	ERJ3GEYJ 563 V (56K)	B	86.7/62.4
R152	7030003620	S.RES	ERJ3GEYJ 333 V (33K)	B	86.7/59.6
R153	7030003520	S.RES	ERJ3GEYJ 472 V (4.7K)	B	85.4/63.6
R154	7030003680	S.RES	ERJ3GEYJ 104 V (100K)	B	208.2/100.4
R155	7030003680	S.RES	ERJ3GEYJ 104 V (100K)	B	208.2/99.2
R156	7030003440	S.RES	ERJ3GEYJ 102 V (1K)	B	204.4/100
R157	7030003440	S.RES	ERJ3GEYJ 102 V (1K)	B	204.4/101.2
R161	7030003860	S.RES	ERJ3GE JPW V	B	190/91.2
R162	7030003860	S.RES	ERJ3GE JPW V	B	191.2/91.2
R171	7030003800	S.RES	ERJ3GEYJ 105 V (1M)	B	291/45.2
R172	7030003800	S.RES	ERJ3GEYJ 105 V (1M)	B	296/45.2
R173	7030003680	S.RES	ERJ3GEYJ 104 V (100K)	B	291/43.9
R174	7030003680	S.RES	ERJ3GEYJ 104 V (100K)	B	296/43.9
R175	7030003680	S.RES	ERJ3GEYJ 104 V (100K)	B	291/41.2
R176	7030003680	S.RES	ERJ3GEYJ 104 V (100K)	B	296/41.2
R177	7030003720	S.RES	ERJ3GEYJ 224 V (220K)	B	292.9/41.9
R178	7030003720	S.RES	ERJ3GEYJ 224 V (220K)	B	294.1/41.9
R181	7030003680	S.RES	ERJ3GEYJ 104 V (100K)	B	116.5/59.9
R182	7030003520	S.RES	ERJ3GEYJ 472 V (4.7K)	B	121.6/59.9
R183	7030003680	S.RES	ERJ3GEYJ 104 V (100K)	B	120.3/57.8
R184	7030003680	S.RES	ERJ3GEYJ 104 V (100K)	B	15.3/97.3
R302	7030006041	S.RES	ERA3YED 622V (6.2K)	B	207.7/81
R303	7030011990	S.RES	ERJ3GEYJ 431V (430)	B	207.7/79.7
R304	7030003420	S.RES	ERJ3GEYJ 681 V (680)	B	207.7/78.5
R305	7030003300	S.RES	ERJ3GEYJ 680 V (68)	B	207.7/77.2
R306	7030004770	S.RES	ERJ3GEYF 113 V (11K)	B	207.7/76
R307	7030006571	S.RES	ERA3YED 392V (3.9K)	B	207.7/74.7
R308	7030011190	S.RES	ERA3YEB 103V (10K)	B	207.7/73.5
R309	7030003300	S.RES	ERJ3GEYJ 680 V (68)	B	207.7/72.2
R310	7030004770	S.RES	ERJ3GEYF 113 V (11K)	B	207.7/71
R311	7030003350	S.RES	ERJ3GEYJ 181 V (180)	B	207.7/69.7
R312	7030005321	S.RES	ERA3YED 103V (10K)	B	207.7/68.5
R313	7030005361	S.RES	ERA3YED 751V (750)	B	207.7/67.2
R314	7030005200	S.RES	ERJ3GEYJ 752 V (7.5K)	B	207.7/66
R315	7030003410	S.RES	ERJ3GEYJ 561 V (560)	B	207.7/64.7
R316	7030012000	S.RES	ERJ3GEYJ 133V (13K)	B	207.7/63.5

M.=Mounted side (T: Mounted on the Top side, B: Mounted on the Bottom side)
S.=Surface mount

[DISPLAY UNIT]

REF NO.	PARTS NO.	DESCRIPTION	M.	H/V LOCATION
R317	7030012010	S.RES ERJ3GEYJ 112V (1.1K)	B	207.7/62.2
R318	7030011770	S.RES ERA3YED 512V (5.1K)	B	207.7/61
R319	7030012020	S.RES ERJ3GEYJ 911V (910)	B	207.7/59.7
R320	7030003570	S.RES ERJ3GEYJ 123 V (12K)	B	207.7/58.5
R321	7030003530	S.RES ERJ3GEYJ 562 V (5.6K)	B	207.7/57.2
R322	7030003260	S.RES ERJ3GEYJ 330 V (33)	B	176.2/90
R323	7030003260	S.RES ERJ3GEYJ 330 V (33)	B	177.5/90
R324	7030003260	S.RES ERJ3GEYJ 330 V (33)	B	178.7/90
R327	7030003260	S.RES ERJ3GEYJ 330 V (33)	B	182.4/91.5
R328	7030003440	S.RES ERJ3GEYJ 102 V (1K)	B	157.2/86
R330	7410001180	S.ARR EXB-V8V 330JV (33)	B	160.2/90.7
R331	7410001180	S.ARR EXB-V8V 330JV (33)	B	163.9/90.7
R332	7410001180	S.ARR EXB-V8V 330JV (33)	B	167.6/90.3
R333	7410001180	S.ARR EXB-V8V 330JV (33)	B	171.3/90.3
R334	7030003350	S.RES ERJ3GEYJ 181 V (180)	B	203.7/81
R335	7030012030	S.RES ERJ3GEYJ 912V (9.1K)	B	202.4/79.7
R336	7030003420	S.RES ERJ3GEYJ 681 V (680)	B	202.4/78.5
R337	7030003300	S.RES ERJ3GEYJ 680 V (68)	B	202.9/77.2
R338	7030003510	S.RES ERJ3GEYJ 392 V (3.9K)	B	202.9/76
R339	7030004770	S.RES ERJ3GEYF 113 V (11K)	B	202.9/74.7
R340	7030011190	S.RES ERA3YEB 103V (10K)	B	202.4/73.5
R341	7030003300	S.RES ERJ3GEYJ 680 V (68)	B	202.4/72.2
R342	7030003350	S.RES ERJ3GEYJ 181 V (180)	B	202.4/71
R343	7030004770	S.RES ERJ3GEYF 113 V (11K)	B	202.4/69.7
R344	7030003550	S.RES ERJ3GEYJ 822 V (8.2K)	B	202.9/68.5
R345	7030012040	S.RES ERJ3GEYJ 242V (2.4K)	B	202.9/67.2
R346	7030003380	S.RES ERJ3GEYJ 331 V (330)	B	203.7/65.1
R347	7030003550	S.RES ERJ3GEYJ 822 V (8.2K)	B	203.7/63.8
R348	7030006591	S.RES ERA3YED 511V (510)	B	203.7/62.5
R349	7030003580	S.RES ERJ3GEYJ 153 V (15K)	B	203.7/61.2
R350	7030007731	S.RES ERA3YED 241V (240)	B	203.7/59.9
R351	7030006041	S.RES ERA3YED 622V (6.2K)	B	203.7/58.6
R352	7030005361	S.RES ERA3YED 751V (750)	B	203.7/57.3
R353	7030003570	S.RES ERJ3GEYJ 123 V (12K)	B	203.7/56
R354	7030003440	S.RES ERJ3GEYJ 102 V (1K)	B	181.2/82.9
R356	7030003450	S.RES ERJ3GEYJ 122 V (1.2K)	B	200/60
R357	7030003680	S.RES ERJ3GEYJ 104 V (100K)	B	178.5/83.9
R359	7030003640	S.RES ERJ3GEYJ 473 V (47K)	B	200/61.5
R360	7030003440	S.RES ERJ3GEYJ 102 V (1K)	B	183.2/81.4
R361	7030003440	S.RES ERJ3GEYJ 102 V (1K)	B	153/77.7
R364	7030003440	S.RES ERJ3GEYJ 102 V (1K)	B	155.8/79.8
R366	7030003440	S.RES ERJ3GEYJ 102 V (1K)	B	155.8/81.2
R370	7030003320	S.RES ERJ3GEYJ 101 V (100)	B	189.7/75
R371	7030003680	S.RES ERJ3GEYJ 104 V (100K)	B	155.7/75
R372	7030003860	S.RES ERJ3GE JPW V	B	189.7/72.5
R375	7030003860	S.RES ERJ3GE JPW V	B	191.1/68.6
R376	7030003860	S.RES ERJ3GE JPW V	B	195.9/56.8
R377	7030003860	S.RES ERJ3GE JPW V	B	47.9/96.9
R379	7030003320	S.RES ERJ3GEYJ 101 V (100)	B	145.9/78.3
R380	7030003440	S.RES ERJ3GEYJ 102 V (1K)	B	153/73.5
R384	7030003440	S.RES ERJ3GEYJ 102 V (1K)	B	153/70.7
R385	7030003440	S.RES ERJ3GEYJ 102 V (1K)	B	155.7/70
R389	7030003320	S.RES ERJ3GEYJ 101 V (100)	B	183.6/91.5
R391	7030003260	S.RES ERJ3GEYJ 330 V (33)	B	173.3/66.7
R392	7030003260	S.RES ERJ3GEYJ 330 V (33)	B	174.5/66.7
R393	7030003260	S.RES ERJ3GEYJ 330 V (33)	B	185.5/61.5
R394	7030003260	S.RES ERJ3GEYJ 330 V (33)	B	186.2/58.7
R395	7030003260	S.RES ERJ3GEYJ 330 V (33)	B	186.9/61.5
R396	7030003260	S.RES ERJ3GEYJ 330 V (33)	B	187.6/58.7
R397	7030003260	S.RES ERJ3GEYJ 330 V (33)	B	188.3/61.5
R398	7030003260	S.RES ERJ3GEYJ 330 V (33)	B	174.8/58.7
R399	7030003260	S.RES ERJ3GEYJ 330 V (33)	B	175.5/61.5
R400	7030003260	S.RES ERJ3GEYJ 330 V (33)	B	176.9/61.5
R401	7030003260	S.RES ERJ3GEYJ 330 V (33)	B	176.2/58.7
R402	7030003260	S.RES ERJ3GEYJ 330 V (33)	B	177.6/58.7
R403	7030003320	S.RES ERJ3GEYJ 101 V (100)	B	178.3/61.5
R404	7030003320	S.RES ERJ3GEYJ 101 V (100)	B	114.4/69.2
R405	7030003320	S.RES ERJ3GEYJ 101 V (100)	B	126.4/94.5
R407	7410001180	S.ARR EXB-V8V 330JV (33)	B	160.1/64.2
R408	7410001180	S.ARR EXB-V8V 330JV (33)	B	163.9/64.2
R409	7410001180	S.ARR EXB-V8V 330JV (33)	B	167.6/64.2
R410	7410001180	S.ARR EXB-V8V 330JV (33)	B	171.3/64.2
R411	7030003460	S.RES ERJ3GEYJ 152 V (1.5K)	B	126.5/72.2
R412	7030003860	S.RES ERJ3GE JPW V	B	122.5/78.5
R413	7030003610	S.RES ERJ3GEYJ 273 V (27K)	B	120.5/79.2
R414	7030003800	S.RES ERJ3GEYJ 105 V (1M)	B	117.6/75.6
R415	7030003860	S.RES ERJ3GE JPW V	B	117.8/91.3
R416	7030003680	S.RES ERJ3GEYJ 104 V (100K)	B	114.5/74.3
R417	7030003860	S.RES ERJ3GE JPW V	B	117.6/68.7
R418	7030003610	S.RES ERJ3GEYJ 273 V (27K)	B	117.8/92.5
R419	7030003560	S.RES ERJ3GEYJ 103 V (10K)	B	142/76.5
R431	7030003560	S.RES ERJ3GEYJ 103 V (10K)	B	48.5/101.8
R432	7030003520	S.RES ERJ3GEYJ 472 V (4.7K)	B	51.3/101.8
R433	7030003640	S.RES ERJ3GEYJ 473 V (47K)	B	54/101.8
R488	7030005200	S.RES ERJ3GEYJ 752 V (7.5K)	B	71.8/77.1
R490	7030003660	S.RES ERJ3GEYJ 683 V (68K)	B	74.4/77.1
R500	7030003400	S.RES ERJ3GEYJ 471 V (470)	B	200/58.7
R601	7030003640	S.RES ERJ3GEYJ 473 V (47K)	B	276.7/73.4
R602	7030003610	S.RES ERJ3GEYJ 273 V (27K)	B	275.2/73.4
R603	7030003650	S.RES ERJ3GEYJ 563 V (56K)	B	276.6/71
R604	7030003640	S.RES ERJ3GEYJ 473 V (47K)	B	256.2/73.9
R605	7030003610	S.RES ERJ3GEYJ 273 V (27K)	B	254.6/73.9
R606	7030003650	S.RES ERJ3GEYJ 563 V (56K)	B	255.3/71.9
R611	7030003520	S.RES ERJ3GEYJ 472 V (4.7K)	B	277.5/75.7
R614	7030003520	S.RES ERJ3GEYJ 472 V (4.7K)	B	257/76
R619	7030004040	S.RES ERJ3GEYJ 4R7 V (4.7)	B	253.7/70.7
R621	7030004040	S.RES ERJ3GEYJ 4R7 V (4.7)	B	253.7/69.5
R623	7030004040	S.RES ERJ3GEYJ 4R7 V (4.7)	B	273.7/70.7
R626	7030004040	S.RES ERJ3GEYJ 4R7 V (4.7)	B	273.7/69
R631	7030003440	S.RES ERJ3GEYJ 102 V (1K)	B	247/59
R1001	7030003480	S.RES ERJ3GEYJ 222 V (2.2K)	B	226.4/95.5
R1002	7030003520	S.RES ERJ3GEYJ 472 V (4.7K)	B	226.4/83.7
R1003	7030003580	S.RES ERJ3GEYJ 153 V (15K)	B	226.4/72
R1004	7030003540	S.RES ERJ3GEYJ 682 V (6.8K)	B	225/95.5

[DISPLAY UNIT]

REF NO.	PARTS NO.	DESCRIPTION	M.	H/V LOCATION
R1005	7030003540	S.RES ERJ3GEYJ 682 V (6.8K)	B	242.7/99
R1006	7030003480	S.RES ERJ3GEYJ 222 V (2.2K)	B	240.2/99
R1007	7030003520	S.RES ERJ3GEYJ 472 V (4.7K)	B	240.2/91.2
R1008	7030003580	S.RES ERJ3GEYJ 153 V (15K)	B	241.8/85.1
R1009	7030003540	S.RES ERJ3GEYJ 682 V (6.8K)	B	258.5/99
R1010	7030003480	S.RES ERJ3GEYJ 222 V (2.2K)	B	256/99
R1011	7030003520	S.RES ERJ3GEYJ 472 V (4.7K)	B	256/91.2
R1012	7030003580	S.RES ERJ3GEYJ 153 V (15K)	B	256/83.2
R1013	7030003540	S.RES ERJ3GEYJ 682 V (6.8K)	B	274.5/99
R1014	7030003480	S.RES ERJ3GEYJ 222 V (2.2K)	B	272/99
R1015	7030003520	S.RES ERJ3GEYJ 472 V (4.7K)	B	272/91.2
R1016	7030003580	S.RES ERJ3GEYJ 153 V (15K)	B	273.8/85.6
R1017	7030003540	S.RES ERJ3GEYJ 682 V (6.8K)	B	284.3/37.7
R1018	7030003540	S.RES ERJ3GEYJ 682 V (6.8K)	B	303.7/69.4
R1019	7030003480	S.RES ERJ3GEYJ 222 V (2.2K)	B	305.2/72
R1020	7030003480	S.RES ERJ3GEYJ 222 V (2.2K)	B	315/37
R1021	7030003450	S.RES ERJ3GEYJ 122 V (1.2K)	B	90.2/104
R1022	7030003390	S.RES ERJ3GEYJ 391 V (390)	B	303.4/75
R1023	7030003420	S.RES ERJ3GEYJ 681 V (680)	B	114.3/104.2
R1024	7030003520	S.RES ERJ3GEYJ 472 V (4.7K)	B	316.7/72
R1025	7030003520	S.RES ERJ3GEYJ 472 V (4.7K)	B	300.2/35.7
R1026	7030003390	S.RES ERJ3GEYJ 391 V (390)	B	306.4/75
R1027	7030003430	S.RES ERJ3GEYJ 821 V (820)	B	149.4/104
R1028	7030003580	S.RES ERJ3GEYJ 153 V (15K)	B	300.2/34.5
R1029	7030003390	S.RES ERJ3GEYJ 391 V (390)	B	319.5/75
R1030	7030003420	S.RES ERJ3GEYJ 681 V (680)	B	202.3/103.3
R1100	7030003400	S.RES ERJ3GEYJ 471 V (470)	B	10/99.5
R1101	7030003520	S.RES ERJ3GEYJ 472 V (4.7K)	B	44/46.7
R1102	7030003480	S.RES ERJ3GEYJ 222 V (2.2K)	B	28.1/77
R1103	7030003580	S.RES ERJ3GEYJ 153 V (15K)	B	54/77.3
R1104	7030003450	S.RES ERJ3GEYJ 122 V (1.2K)	B	23.7/87.5
R1105	7030003400	S.RES ERJ3GEYJ 471 V (470)	B	23.7/88.8
R1106	7030003390	S.RES ERJ3GEYJ 391 V (390)	B	40.5/50.5
R1107	7030003400	S.RES ERJ3GEYJ 471 V (470)	B	44.5/94.2
R1108	7030003390	S.RES ERJ3GEYJ 391 V (390)	B	48.2/49.3
R1109	7030003480	S.RES ERJ3GEYJ 222 V (2.2K)	B	63.8/84.5
R1110	7030003520	S.RES ERJ3GEYJ 472 V (4.7K)	B	63.8/75.9
R1111	7030003580	S.RES ERJ3GEYJ 153 V (15K)	B	63.8/67.2
R1112	7030003480	S.RES ERJ3GEYJ 222 V (2.2K)	B	63.8/50
R1113	7030003520	S.RES ERJ3GEYJ 472 V (4.7K)	B	63.8/41.5
C1	4030011600	S.CER C1608 JB 1E 104K-T	B	148.9/91.2
C11	4030011600	S.CER C1608 JB 1E 104K-T	B	24.3/43.1
C12	4030011600	S.CER C1608 JB 1E 104K-T	B	71/28.7
C13	4030011600	S.CER C1608 JB 1E 104K-T	B	39.3/37.9
C14	4030011600	S.CER C1608 JB 1E 104K-T	B	39.3/39.2
C15	4030011600	S.CER C1608 JB 1E 104K-T	B	39.3/40.4
C16	4030011600	S.CER C1608 JB 1E 104K-T	B	39.3/41.7
C17	4030011600	S.CER C1608 JB 1E 104K-T	B	100.5/40.1
C18	4030011600	S.CER C1608 JB 1E 104K-T	B	84.1/46.5
C19	4030011600	S.CER C1608 JB 1E 104K-T	B	49.2/37.3
C20	4030011600	S.CER C1608 JB 1E 104K-T	B	53.4/37.5
C22	4030011600	S.CER C1608 JB 1E 104K-T	B	53.4/38.7
C24	4030011600	S.CER C1608 JB 1E 104K-T	B	53.4/39.9
C25	4030011600	S.CER C1608 JB 1E 104K-T	B	95.4/30.4
C26	4030011600	S.CER C1608 JB 1E 104K-T	B	53.4/41.1
C27	4030011600	S.CER C1608 JB 1E 104K-T	B	97.8/30.4
C28	4030011600	S.CER C1608 JB 1E 104K-T	B	99/30.4
C29	4030011600	S.CER C1608 JB 1E 104K-T	B	94.5/43.9
C30	4030011600	S.CER C1608 JB 1E 104K-T	B	95.8/43.9
C31	4030011600	S.CER C1608 JB 1E 104K-T	B	29.5/62.8
C32	4030011600	S.CER C1608 JB 1E 104K-T	B	82.6/32
C33	4030011600	S.CER C1608 JB 1E 104K-T	B	85.1/32
C34	4030011600	S.CER C1608 JB 1E 104K-T	B	82.5/46.5
C35	4030011600	S.CER C1608 JB 1E 104K-T	B	81.3/46.5
C36	4030011600	S.CER C1608 JB 1E 104K-T	B	80/46.5
C37	4030011600	S.CER C1608 JB 1E 104K-T	B	78.8/46.5
C38	4030006880	S.CER C1608 JB 1H 472K-T	B	57.9/57.7
C51	4030019500	S.CER GRM21BB31A106KE18 (GRM40 B)	B	101.6/62.7
C52	4030011600	S.CER C1608 JB 1E 104K-T	B	100.2/64.3
C61	4030011600	S.CER C1608 JB 1E 104K-T	B	109.4/84.4
C62	4030011600	S.CER C1608 JB 1E 104K-T	B	106.6/80.2
C71	4030011600	S.CER C1608 JB 1E 104K-T	B	225/92.5
C72	4030011600	S.CER C1608 JB 1E 104K-T	B	301/67.5
C73	4030006900	S.CER C1608 JB 1H 103K-T	B	291.8/68
C74	4030006900	S.CER C1608 JB 1H 103K-T	B	300.3/69.8
C101	4030007020	S.CER C1608 CH 1H 120J-T	B	115.7/38.1
C102	4030007020	S.CER C1608 CH 1H 120J-T	B	115.7/41.2
C103	4030006900	S.CER C1608 JB 1H 103K-T	B	130.1/29
C104	4030011600	S.CER C1608 JB 1E 104K-T	B	121.3/40.5
C105	4030011600	S.CER C1608 JB 1E 104K-T	B	140.4/52.7
C106	4030011600	S.CER C1608 JB 1E 104K-T	B	141.9/40.8
C107	4030011600	S.CER C1608 JB 1E 104K-T	B	126.6/29.4
C111	4030011600	S.CER C1608 JB 1E 104K-T	B	272.5/7
C141	4030011600	S.CER C1608 JB 1E 104K-T	B	58.4/55.1
C151	4030011600	S.CER C1608 JB 1E 104K-T	B	85.4/60.9
C152	4030008880	S.CER C1608 JB 1H 223K-T	B	80.4/61.9
C153	4030011600	S.CER C1608 JB 1E 104K-T	B	199.9/99.8
C154	4030019500	S.CER GRM21BB31A106KE18 (GRM40 B)	B	194.5/86.5
C155	4030011600	S.CER C1608 JB 1E 104K-T	B	196.6/88.3
C156	4550007710	S.TAN TEESVB2 1A 476M8R	B	195.2/81.7
C157	4030011600	S.CER C1608 JB 1E 104K-T	B	198.6/85.3
C158	4030011600	S.CER C1608 JB 1E 104K-T	B	194.7/88.3
C159	4030006860	S.CER C1608 JB 1H 102K-T	B	198.6/84
C160	4030006860	S.CER C1608 JB 1H 102K-T	B	202.5/91.5
C161	4550007710	S.TAN TEESVB2 1A 476M8R	B	204.1/87.9
C162	4030011600	S.CER C1608 JB 1E 104K-T	B	202.5/90.2
C171	4030011600	S.CER C1608 JB 1E 104K-T	B	286.7/48
C172	4030006860	S.CER C1608 JB 1H 102K-T	B	296/42.7
C173	4030006860	S.CER C1608 JB 1H 102K-T	B	291/42.7
C174	4030011600	S.CER C1608 JB 1E 104K-T	B	301.9/27.1

M.=Mounted side (T: Mounted on the Top side, B: Mounted on the Bottom side)
S.=Surface mount

[DISPLAY UNIT]

REF NO.	PARTS NO.	DESCRIPTION	M.	H/V LOCATION
C301	4030011600	S.CER C1608 JB 1E 104K-T	B	206.2/82.2
C305	4030011600	S.CER C1608 JB 1E 104K-T	B	203.7/54.7
C308	4030011600	S.CER C1608 JB 1E 104K-T	B	164.9/87.5
C309	4030011600	S.CER C1608 JB 1E 104K-T	B	174.1/87.2
C310	4030011600	S.CER C1608 JB 1E 104K-T	B	177/83.2
C311	4030011600	S.CER C1608 JB 1E 104K-T	B	155.8/84.1
C312	4030017490	S.CER C1608 JB 1A 105K-T	B	190.6/65.7
C313	4030017490	S.CER C1608 JB 1A 105K-T	B	194.3/78.2
C314	4030011600	S.CER C1608 JB 1E 104K-T	B	177.7/77.4
C315	4030017490	S.CER C1608 JB 1A 105K-T	B	155.7/76.4
C316	4030019500	S.CER GRM21BB31A106KE18 (GRM40 B)	B	196.7/60.5
C317	4030011600	S.CER C1608 JB 1E 104K-T	B	153/76.3
C318	4030011600	S.CER C1608 JB 1E 104K-T	B	177.6/73
C320	4030011600	S.CER C1608 JB 1E 104K-T	B	164.9/67.2
C321	4030011600	S.CER C1608 JB 1E 104K-T	B	168.9/67.2
C401	4030019090	S.CER C2012 JB 1C 225M-T	B	192/60.7
C402	4030011600	S.CER C1608 JB 1E 104K-T	B	191.6/58
C403	4030006860	S.CER C1608 JB 1H 102K-T	B	191.6/59.2
C405	4030018980	S.CER C1608 JB 1H 104K-T	B	194.4/59.2
C406	4030006860	S.CER C1608 JB 1H 102K-T	B	194.4/58
C411	4030006860	S.CER C1608 JB 1H 102K-T	B	162.7/57.2
C412	4030011600	S.CER C1608 JB 1E 104K-T	B	183.7/58
C413	4030006860	S.CER C1608 JB 1H 102K-T	B	183.7/59.2
C414	4030011600	S.CER C1608 JB 1E 104K-T	B	162.7/58.4
C418	4030011600	S.CER C1608 JB 1E 104K-T	B	143.1/78.5
C419	4030011810	S.CER C1608 JB 1A 224K-T	B	144.5/78.5
C420	4030017490	S.CER C1608 JB 1A 105K-T	B	183.7/60.4
C422	4030009580	S.CER C1608 JB 1H 681K-T	B	140.1/74.9
C423	4030019090	S.CER C2012 JB 1C 225M-T	B	135.3/77.3
C424	4030019090	S.CER C2012 JB 1C 225M-T	B	133.9/80.6
C425	4030011600	S.CER C1608 JB 1E 104K-T	B	131/91.2
C426	4030011600	S.CER C1608 JB 1E 104K-T	B	131/88.2
C427	4030011600	S.CER C1608 JB 1E 104K-T	B	131/85.2
C428	4030011600	S.CER C1608 JB 1E 104K-T	B	131/82.2
C429	4030011600	S.CER C1608 JB 1E 104K-T	B	131/79.2
C430	4030019500	S.CER GRM21BB31A106KE18 (GRM40 B)	B	128.4/72
C431	4030011600	S.CER C1608 JB 1E 104K-T	B	125.8/82.2
C432	4030011600	S.CER C1608 JB 1E 104K-T	B	125.8/79.2
C433	4030011600	S.CER C1608 JB 1E 104K-T	B	125.8/91.2
C434	4030011600	S.CER C1608 JB 1E 104K-T	B	125.8/88.2
C435	4030011600	S.CER C1608 JB 1E 104K-T	B	125.8/85.2
C436	4030011600	S.CER C1608 JB 1E 104K-T	B	124.5/79.2
C437	4030018980	S.CER C1608 JB 1H 104K-T	B	124.5/91.2
C438	4030019500	S.CER GRM21BB31A106KE18 (GRM40 B)	B	120.8/72
C439	4030011600	S.CER C1608 JB 1E 104K-T	B	117.6/74.3
C440	4030011600	S.CER C1608 JB 1E 104K-T	B	49.1/96.9
C606	4030019500	S.CER GRM21BB31A106KE18 (GRM40 B)	B	278.2/73.4
C607	4030019500	S.CER GRM21BB31A106KE18 (GRM40 B)	B	257.7/73.8
C608	4030019500	S.CER GRM21BB31A106KE18 (GRM40 B)	B	265.4/70.8
C609	4030019500	S.CER GRM21BB31A106KE18 (GRM40 B)	B	245.5/70.7
C613	4030016990	S.CER GRM32RR11H105KA01L (GRM42-2 R)	B	270.2/76.2
C614	4030018980	S.CER C1608 JB 1H 104K-T	B	269.3/73.3
C616	4030016990	S.CER GRM32RR11H105KA01L (GRM42-2 R)	B	250.1/75.2
C617	4030018980	S.CER C1608 JB 1H 104K-T	B	249.2/73.1
C653	4030011600	S.CER C1608 JB 1E 104K-T	B	267/70
C654	4030011600	S.CER C1608 JB 1E 104K-T	B	247.2/70
C1001	4030011600	S.CER C1608 JB 1E 104K-T	B	273.2/99
C1002	4030011600	S.CER C1608 JB 1E 104K-T	B	257.2/99
C1003	4030011600	S.CER C1608 JB 1E 104K-T	B	241.5/99
C1004	4030011600	S.CER C1608 JB 1E 104K-T	B	223.7/95.5
C1006	4030011600	S.CER C1608 JB 1E 104K-T	B	305.2/70.7
C1007	4030011600	S.CER C1608 JB 1E 104K-T	B	281.7/37.7
C1101	4030011600	S.CER C1608 JB 1E 104K-T	B	65.2/88.7
C1102	4030011600	S.CER C1608 JB 1E 104K-T	B	29.5/77
C1103	4030011600	S.CER C1608 JB 1E 104K-T	B	65.2/54.5
J4	6510022621	S.CON 10FMN-BMTTR-A-TBT(LF)(SN)	B	296/70.3
J21	6510022621	S.CON 10FMN-BMTTR-A-TBT(LF)(SN)	B	63.8/29.4
J31	6510022621	S.CON 10FMN-BMTTR-A-TBT(LF)(SN)	B	58.6/70.7
J33	6510018971	S.CON B4B-PH-SM4-TB(LF)(SN)	B	38.8/87.8
J107	6510026080	CON XM7A-0441		
J113	6510022621	S.CON 10FMN-BMTTR-A-TBT(LF)(SN)	B	309.8/29.5
J114	6510018971	S.CON B4B-PH-SM4-TB(LF)(SN)	B	280.7/10.7
J141	6510022621	S.CON 10FMN-BMTTR-A-TBT(LF)(SN)	B	53.6/49.7
J301	6510021722	S.CON 30FLT-SM2-TB(LF)(SN)(M)	B	176.9/96.5
J407	6510026740	S.CON IMSA-9637S-60Y922	B	177.4/52.1
J601	6510026730	S.CON IMSA-9637S-08Y902	B	208.5/48.6
J603	6510022611	S.CON 16FMN-BMTTR-A-TBT(LF)(SN)	B	27.6/52.7
J604	6510021722	S.CON 30FLT-SM2-TB(LF)(SN)(M)	B	196.7/96.1
DS51	5040003420	S.LED SMLE12BC7T T86	T	9.7/40.7
DS1001	5040003390	S.LED FR1111C-TR	T	90.1/104
DS1002	5040002930	S.LED SML-512MW T86	T	296.1/73.9
DS1003	5040002930	S.LED SML-512MW T86	T	111.1/104
DS1004	5040002930	S.LED SML-512MW T86	T	309.6/73.9
DS1005	5040003400	S.LED SMLE12WBC7W1AR	T	149.6/104
DS1006	5040003380	S.LED FY1111C-TR	T	194.6/104
DS1007	5040002930	S.LED SML-512MW T86	T	323.6/73.9
DS1100	5040002930	S.LED SML-512MW T86	T	9.7/99.6
DS1101	5040003390	S.LED FR1111C-TR	T	9.7/98.3
DS1102	5040003390	S.LED FR1111C-TR	T	27.7/87
DS1103	5040002930	S.LED SML-512MW T86	T	27.7/88.3
DS1104	5040002930	S.LED SML-512MW T86	T	30.3/48.6

[DISPLAY UNIT]

REF NO.	PARTS NO.	DESCRIPTION	M.	H/V LOCATION
DS1105	5040002930	S.LED SML-512MW T86	T	45.7/88.3
DS1106	5040002930	S.LED SML-512MW T86	T	48.7/48.6
S1001	2260002740	S.SWI LS8J2M-T	T	228.9/101.2
S1002	2260002740	S.SWI LS8J2M-T	T	228.9/89.6
S1003	2260002740	S.SWI LS8J2M-T	T	228.9/78.1
S1004	2260002740	S.SWI LS8J2M-T	T	228.9/66.5
S1005	2260002740	S.SWI LS8J2M-T	T	228.9/53.5
S1006	2260002740	S.SWI LS8J2M-T	T	244.3/103
S1007	2260002740	S.SWI LS8J2M-T	T	244.3/95.1
S1008	2260002740	S.SWI LS8J2M-T	T	244.3/87.3
S1009	2260002740	S.SWI LS8J2M-T	T	244.3/79.4
S1010	2260002740	S.SWI LS8J2M-T	T	244.3/71.6
S1011	2260002740	S.SWI LS8J2M-T	T	244.3/63.7
S1012	2260002740	S.SWI LS8J2M-T	T	260.2/103
S1013	2260002740	S.SWI LS8J2M-T	T	260.2/95.1
S1014	2260002740	S.SWI LS8J2M-T	T	260.2/87.3
S1015	2260002740	S.SWI LS8J2M-T	T	260.2/79.4
S1016	2260002740	S.SWI LS8J2M-T	T	260.2/71.6
S1017	2260002740	S.SWI LS8J2M-T	T	260.2/63.7
S1018	2260002740	S.SWI LS8J2M-T	T	276.1/103
S1019	2260002740	S.SWI LS8J2M-T	T	276.1/95.1
S1020	2260002740	S.SWI LS8J2M-T	T	276.1/87.3
S1021	2260002740	S.SWI LS8J2M-T	T	276.1/79.4
S1022	2260002740	S.SWI LS8J2M-T	T	276.1/71.6
S1023	2260002740	S.SWI LS8J2M-T	T	276.1/63.7
S1024	2260002740	S.SWI LS8J2M-T	T	277.5/53.5
S1025	2260002740	S.SWI LS8J2M-T	T	295.8/69.4
S1026	2260002740	S.SWI LS8J2M-T	T	295.8/32.3
S1027	2260002740	S.SWI LS8J2M-T	T	286.8/2.3
S1028	2260002740	S.SWI LS8J2M-T	T	309.8/69.4
S1029	2260002740	S.SWI LS8J2M-T	T	309.8/32.3
S1030	2260002740	S.SWI LS8J2M-T	T	323.8/69.4
S1031	2260002740	S.SWI LS8J2M-T	T	323.8/32.3
S1101	2260002740	S.SWI LS8J2M-T	T	10/95.2
S1102	2260002740	S.SWI LS8J2M-T	T	10/83.7
S1103	2260002740	S.SWI LS8J2M-T	T	28/83.7
S1104	2260002740	S.SWI LS8J2M-T	T	30.6/44.2
S1105	2260002740	S.SWI LS8J2M-T	T	46/83.7
S1106	2260002740	S.SWI LS8J2M-T	T	49/44.2
S1107	2260002740	S.SWI LS8J2M-T	T	66.3/88.8
S1108	2260002740	S.SWI LS8J2M-T	T	66.3/80.2
S1109	2260002740	S.SWI LS8J2M-T	T	66.3/71.6
S1110	2260002740	S.SWI LS8J2M-T	T	66.3/63
S1111	2260002740	S.SWI LS8J2M-T	T	66.3/54.4
S1112	2260002740	S.SWI LS8J2M-T	T	66.3/45.8
S1113	2260002740	S.SWI LS8J2M-T	T	66.3/37.2
S1201	2260002740	S.SWI LS8J2M-T	T	91.7/12.7
S1202	2260002740	S.SWI LS8J2M-T	T	91.7/6.1
S1203	2260002740	S.SWI LS8J2M-T	T	113.2/12.7
S1204	2260002740	S.SWI LS8J2M-T	T	113.2/6.1
S1205	2260002740	S.SWI LS8J2M-T	T	134.7/12.7
S1206	2260002740	S.SWI LS8J2M-T	T	134.7/6.1
S1207	2260002740	S.SWI LS8J2M-T	T	156.2/12.7
S1208	2260002740	S.SWI LS8J2M-T	T	156.2/6.1
S1209	2260002740	S.SWI LS8J2M-T	T	213.6/6.1
S1210	2260002740	S.SWI LS8J2M-T	T	177.7/12.7
S1211	2260002740	S.SWI LS8J2M-T	T	177.7/6.1
S1212	2260002740	S.SWI LS8J2M-T	T	223.8/6.1
S1213	2260002740	S.SWI LS8J2M-T	T	199.2/12.7
S1214	2260002740	S.SWI LS8J2M-T	T	199.2/6.1
S1215	2260002740	S.SWI LS8J2M-T	T	218.6/12.7
EP2	6910020190	UNI L5S30853P00		
EP11	6910014730	S.BEA MPZ2012S331A-T	B	6.5/38.3
EP12	6910014730	S.BEA MPZ2012S331A-T	B	14.5/36.9
EP31	6910012350	S.BEA MMZ1608Y 102BT	B	68/72.6
EP32	6910012350	S.BEA MMZ1608Y 102BT	B	68.5/68.2
EP33	6910012350	S.BEA MMZ1608Y 102BT	B	68.5/67
EP40	6910012350	S.BEA MMZ1608Y 102BT	B	54/75.5
EP41	6910012350	S.BEA MMZ1608Y 102BT	B	54/74.2
EP42	6910014690	S.BEA MPZ1608S221A-T	B	42/55.6
EP43	6910014690	S.BEA MPZ1608S221A-T	B	54.7/58.4
EP101	6910014690	S.BEA MPZ1608S221A-T	B	139.7/56.1
EP151	6910014690	S.BEA MPZ1608S221A-T	B	196.4/92.5
EP152	6910014690	S.BEA MPZ1608S221A-T	B	197.6/92.5
EP161	6910014730	S.BEA MPZ2012S331A-T	B	188.5/91.2
EP162	6910014730	S.BEA MPZ2012S331A-T	B	192.8/91.2
EP163	6910014730	S.BEA MPZ2012S331A-T	B	199.7/92.2
EP401	6910014730	S.BEA MPZ2012S331A-T	B	143.3/89.3
EP402	6910020910	S.BEA MPZ1608S300AT	B	131.7/73.8
EP403	6910012350	S.BEA MMZ1608Y 102BT	B	111.9/71.6
EP404	6910012350	S.BEA MMZ1608Y 102BT	B	126.4/76
EP405	6910012350	S.BEA MMZ1608Y 102BT	B	123.4/76
EP602	6910014730	S.BEA MPZ2012S331A-T	B	257.4/64.8
EP603	6910014730	S.BEA MPZ2012S331A-T	B	234.7/66.6
EP605	6910014730	S.BEA MPZ2012S331A-T	B	266.6/74.3
EP606	6910014730	S.BEA MPZ2012S331A-T	B	245.4/74.2
EP607	6910014690	S.BEA MPZ1608S221A-T	B	181.6/61.1
EP608	6910014690	S.BEA MPZ1608S221A-T	B	183.2/83.8
EP611	6910020910	S.BEA MPZ1608S300AT	B	266.2/78.1
EP612	6910020910	S.BEA MPZ1608S300AT	B	245.8/77.9

M.=Mounted side (T: Mounted on the Top side, B: Mounted on the Bottom side)
S.=Surface mount

[MIC UNIT]

REF NO.	PARTS NO.	DESCRIPTION		M.	H/V LOCATION
L1	6200003261	S.COI	NLV32T-101J	T	9/15
L2	6200003261	S.COI	NLV32T-101J	T	2.7/15
L3	6200003261	S.COI	NLV32T-101J	T	6/15
C1	4030006900	S.CER	C1608 JB 1H 103K-T	T	8.2/9.1
C2	4030006900	S.CER	C1608 JB 1H 103K-T	T	11.5/16.3
C3	4030006900	S.CER	C1608 JB 1H 103K-T	T	8.2/5.7
C4	4030007130	S.CER	C1608 CH 1H 101J-T	T	20.2/1.6
C5	4030006900	S.CER	C1608 JB 1H 103K-T	T	16.5/16.3
C6	4030006900	S.CER	C1608 JB 1H 103K-T	T	22.3/10.4
C7	4030006900	S.CER	C1608 JB 1H 103K-T	T	13.6/10.6
C8	4030007090	S.CER	C1608 CH 1H 470J-T	T	9.5/9.1
J1	6510000191	CON	FM214-8SS(P)-1		
J2	6510022621	S.CON	10FMN-BMTTR-A-TBT(LF)(SN)	T	4/6.5
EP2	6910012350	S.BEA	MMZ1608Y 102BT	T	17.7/14.9
EP3	6910012350	S.BEA	MMZ1608Y 102BT	T	21.1/10.4
EP4	6910012350	S.BEA	MMZ1608Y 102BT	T	9.7/4.5
EP5	6910012350	S.BEA	MMZ1608Y 102BT	T	12/14.5
EP6	6910014690	S.BEA	MPZ1608S221A-T	T	16/10.9
EP7	6910015130	S.BEA	MMZ1608D 301BT	T	12.1/2
EP8	6910015130	S.BEA	MMZ1608D 301BT	T	12.1/3.3
EP9	6910015130	S.BEA	MMZ1608D 301BT	T	18.2/2.3
EP10	6910015130	S.BEA	MMZ1608D 301BT	T	17/2.4
EP11	6910012350	S.BEA	MMZ1608Y 102BT	T	9/12.4
EP12	6910014690	S.BEA	MPZ1608S221A-T	T	8.5/3.1

[JACK UNIT]

REF NO.	PARTS NO.	DESCRIPTION		M.	H/V LOCATION
R1	7030006240	S.RES	ERJ12YJ181U (180)	T	8.1/18.1
R2	7030006240	S.RES	ERJ12YJ181U (180)	T	8.2/26.5
R486	7030003580	S.RES	ERJ3GEYJ 153 V (15K)	T	6.1/7.6
R487	7310004300	S.TRI	EVM-3SSX50 B13	T	11/8
C1	4030006900	S.CER	C1608 JB 1H 103K-T	T	2.5/10.4
C2	4030006900	S.CER	C1608 JB 1H 103K-T	T	5.2/13.2
C101	4030006900	S.CER	C1608 JB 1H 103K-T	T	3.7/32.5
C102	4030006900	S.CER	C1608 JB 1H 103K-T	T	3.7/31
J1	6510022621	S.CON	10FMN-BMTTR-A-TBT(LF)(SN)	T	3.7/21.8
J2	6510023891	CON	S-G4617#01F		
J102	6510023900	CON	LGR4619-7000		
EP1	6910014690	S.BEA	MPZ1608S221A-T	T	4.4/11.1
EP2	6910014690	S.BEA	MPZ1608S221A-T	T	2.8/13.2
EP3	6910014690	S.BEA	MPZ1608S221A-T	T	4/13.2
EP101	6910012350	S.BEA	MMZ1608Y 102BT	T	7.2/32.5
EP102	6910012350	S.BEA	MMZ1608Y 102BT	T	7.2/31

[VR-A UNIT]

REF NO.	PARTS NO.	DESCRIPTION		M.	H/V LOCATION
R1	7210002970	VAR	RV-314(RK0972210 10KB/10KB)		
R2	7210002970	VAR	RV-314(RK0972210 10KB/10KB)		
R3	7030003520	S.RES	ERJ3GEYJ 472 V (4.7K)	T	6.5/12.3
R4	7030003520	S.RES	ERJ3GEYJ 472 V (4.7K)	T	6.5/13.6
R5	7030003520	S.RES	ERJ3GEYJ 472 V (4.7K)	T	43.4/12.3
R6	7030003520	S.RES	ERJ3GEYJ 472 V (4.7K)	T	43.4/13.6
R33	7030003860	S.RES	ERJ3GE JPW V	T	34.2/8.3
R34	7030003860	S.RES	ERJ3GE JPW V	T	32.9/8.3
R35	7030003860	S.RES	ERJ3GE JPW V	T	31.6/8.3
R38	7030003860	S.RES	ERJ3GE JPW V	T	31.6/11.1
C1	4030006900	S.CER	C1608 JB 1H 103K-T	T	39.9/13.6
C2	4030006900	S.CER	C1608 JB 1H 103K-T	T	39.9/12.3
C3	4030006900	S.CER	C1608 JB 1H 103K-T	T	10/13.6
C4	4030006900	S.CER	C1608 JB 1H 103K-T	T	10/12.3
J32	6510022621	S.CON	10FMN-BMTTR-A-TBT(LF)(SN)	T	35/4
J33	6510022611	S.CON	16FMN-BMTTR-A-TBT(LF)(SN)	T	17/4
EP34	6910012350	S.BEA	MMZ1608Y 102BT	T	40.7/8.3
EP35	6910012350	S.BEA	MMZ1608Y 102BT	T	39.4/8.3
EP36	6910012350	S.BEA	MMZ1608Y 102BT	T	38.1/8.3
EP37	6910012350	S.BEA	MMZ1608Y 102BT	T	36.8/8.3
EP38	6910014690	S.BEA	MPZ1608S221A-T	T	35.5/8.3
EP39	6910012350	S.BEA	MMZ1608Y 102BT	T	30.3/8.3
EP43	6910012350	S.BEA	MMZ1608Y 102BT	T	28.5/8.3
EP44	6910012350	S.BEA	MMZ1608Y 102BT	T	27.2/8.3
EP45	6910012350	S.BEA	MMZ1608Y 102BT	T	25.9/8.3

[VA-B UNIT]

REF NO.	PARTS NO.	DESCRIPTION		M.	H/V LOCATION
R1	7210002970	VAR	RV-314(RK0972210 10KB/10KB)		
R2	7030003520	S.RES	ERJ3GEYJ 472 V (4.7K)	T	44/9.8
R3	7030003520	S.RES	ERJ3GEYJ 472 V (4.7K)	T	44/11.1
J1	6510022621	S.CON	10FMN-BMTTR-A-TBT(LF)(SN)	T	25.1/4.3
S1	2250000410	ENC	TP90D96E20-30F-2178-1		

[VA-C UNIT]

REF NO.	PARTS NO.	DESCRIPTION		M.	H/V LOCATION
R1	7210001130	VAR	RK097111T005A (10KB)		
R2	7210001130	VAR	RK097111T005A (10KB)		
R3	7210001130	VAR	RK097111T005A (10KB)		
R4	7210001130	VAR	RK097111T005A (10KB)		
R11	7030003520	S.RES	ERJ3GEYJ 472 V (4.7K)	T	22/10.6
R12	7030003520	S.RES	ERJ3GEYJ 472 V (4.7K)	T	19/10.6
R13	7030003520	S.RES	ERJ3GEYJ 472 V (4.7K)	T	13/10.6
R14	7030003520	S.RES	ERJ3GEYJ 472 V (4.7K)	T	16/10.6
C11	4030006900	S.CER	C1608 JB 1H 103K-T	T	20.5/10.6
C12	4030006900	S.CER	C1608 JB 1H 103K-T	T	17.6/10.6
C13	4030006900	S.CER	C1608 JB 1H 103K-T	T	11.5/10.6
C14	4030006900	S.CER	C1608 JB 1H 103K-T	T	14.5/10.6
J1	6510022621	S.CON	10FMN-BMTTR-A-TBT(LF)(SN)	T	14.7/5.4

[RIT UNIT]

REF NO.	PARTS NO.	DESCRIPTION		M.	H/V LOCATION
J1	6510022621	S.CON	10FMN-BMTTR-A-TBT(LF)(SN)	T	4/9
S1	2250000650	ENC	EVEGC2F2524B		

M.=Mounted side (T: Mounted on the Top side, B: Mounted on the Bottom side)
S.=Surface mount

[DCDC UNIT]

REF NO.	PARTS NO.	DESCRIPTION		M.	H/V LOCATION
IC101	1180003100	S.REG	BD9302FP-E2	T	51.2/22.5
IC201	1190002450	S.IC	BD9851FEV-E2	T	11/12.7
Q201	1550000230	S.FET	SSM3J117TU(TE85L)	T	22.8/15.8
D101	1750000960	S.DIO	RB081L-20	T	59.9/21.7
D102	1750000960	S.DIO	RB081L-20	T	42.4/21.7
D201	1790001450	S.DIO	RB160L-40 TE-25	T	23.4/27.3
L101	6200010881	S.COI	CDRH124NP-330MC	T	64/11.8
L102	6200013280	S.COI	SLF10145T-330M1R6-PF	T	67.2/24.2
L103	6200013280	S.COI	SLF10145T-330M1R6-PF	T	35.1/24.2
L201	6200011551	S.COI	CDRH6D28NP-270NC	T	7.4/28.5
L202	6200011300	S.COI	EXCML16A270U	T	22.6/31.5
L203	6180003501	S.COI	SLF6028T-100M1R3-PF	T	21.5/20.6
L204	6200011300	S.COI	EXCML16A270U	T	19.7/16.5
R101	7030003600	S.RES	ERJ3GEYJ 223 V (22K)	T	52.6/30.8
R102	7030003600	S.RES	ERJ3GEYJ 223 V (22K)	T	49.8/30.8
R103	7030003680	S.RES	ERJ3GEYJ 104 V (100K)	T	55.4/32.1
R104	7030003600	S.RES	ERJ3GEYJ 223 V (22K)	T	47/30.8
R105	7030005451	S.RES	ERA3YED 153V (15K)	T	52.6/29.5
R106	7030003560	S.RES	ERJ3GEYJ 103 V (10K)	T	57.4/28.7
R107	7030003560	S.RES	ERJ3GEYJ 103 V (10K)	T	44.9/28.7
R108	7030003440	S.RES	ERJ3GEYJ 102 V (1K)	T	60.1/30.8
R109	7030003440	S.RES	ERJ3GEYJ 102 V (1K)	T	44.2/30.8
R110	7030003520	S.RES	ERJ3GEYJ 472 V (4.7K)	T	47/32.1
R111	7030003520	S.RES	ERJ3GEYJ 472 V (4.7K)	T	58/30.8
R201	7030005691	S.RES	ERA3YED 123V (12K)	T	23.8/8.4
R202	7030003440	S.RES	ERJ3GEYJ 102 V (1K)	T	22.5/8.4
R203	7030007230	S.RES	ERA3YED 102V (1K)	T	20.5/6.4
R204	7030006461	S.RES	ERA3YED 152V (1.5K)	T	20.5/9
R205	7030005981	S.RES	ERA3YED 333V (33K)	T	15.6/9.6
R206	7030003700	S.RES	ERJ3GEYJ 154 V (150K)	T	21.3/12.3
R207	7030005451	S.RES	ERA3YED 153V (15K)	T	19.2/10.3
R208	7030005321	S.RES	ERA3YED 103V (10K)	T	18.5/8.2
R209	7030003440	S.RES	ERJ3GEYJ 102 V (1K)	T	19.2/11.6
R210	7030003740	S.RES	ERJ3GEYJ 334 V (330K)	T	23.2/13
C101	4030007070	S.CER	C1608 CH 1H 330J-T	T	55.4/30.8
C102	4030007070	S.CER	C1608 CH 1H 330J-T	T	49.6/32.1
C103	4030008650	S.CER	C1608 JB 1H 332K-T	T	55.4/29.5
C104	4030008650	S.CER	C1608 JB 1H 332K-T	T	47/29.5
C105	4030007130	S.CER	C1608 CH 1H 101J-T	T	47/28.2
C106	4030007130	S.CER	C1608 CH 1H 101J-T	T	55.4/28.2
C107	4030011600	S.CER	C1608 JB 1E 104K-T	T	52.4/28.2
C108	4030011600	S.CER	C1608 JB 1E 104K-T	T	49.8/29.5
C109	4030011600	S.CER	C1608 JB 1E 104K-T	T	55.7/17.2
C110	4030011600	S.CER	C1608 JB 1E 104K-T	T	46.6/17.2
C111	4030011600	S.CER	C1608 JB 1E 104K-T	T	52.7/17.2
C112	4510009700	S.ELE	EEEFK1C101P	T	47.4/10
C113	4030019500	S.CER	GRM21BB31A106KE18 (GRM40 B)	T	59.1/27.7
C114	4030018960	S.CER	C3216 JB 1C 106MT-N	T	52.8/13.9
C115	4030019500	S.CER	GRM21BB31A106KE18 (GRM40 B)	T	41.5/27.7
C116	4030019500	S.CER	GRM21BB31A106KE18 (GRM40 B)	T	60.8/27.7
C117	4030019500	S.CER	GRM21BB31A106KE18 (GRM40 B)	T	43.3/27.7
C201	4510009700	S.ELE	EEEFK1C101P	T	7.7/20.8
C202	4030011600	S.CER	C1608 JB 1E 104K-T	T	14/26
C203	4030011600	S.CER	C1608 JB 1E 104K-T	T	18.6/24.7
C204	4030018960	S.CER	C3216 JB 1C 106MT-N	T	19.1/26.4
C205	4030018960	S.CER	C3216 JB 1C 106MT-N	T	17.2/16.5
C206	4030010020	S.CER	C1608 JB 1H 122K-T	T	20.5/7.7
C207	4030007070	S.CER	C1608 CH 1H 330J-T	T	16.9/10.1
C208	4030008860	S.CER	C1608 JB 1H 153K-T	T	19.2/12.9
C209	4030011600	S.CER	C1608 JB 1E 104K-T	T	23.2/11.7
C210	4030011600	S.CER	C1608 JB 1E 104K-T	T	6.4/8.9
C211	4030019090	S.CER	C2012 JB 1C 225M-T	T	12.4/26.3
C212	4030011600	S.CER	C1608 JB 1E 104K-T	T	5.6/13.4
C213	4030017490	S.CER	C1608 JB 1A 105K-T	T	5/11.4
C214	4030018960	S.CER	C3216 JB 1C 106MT-N	T	19.1/28.6
J1	6910020210	CON	IMSA-9180S-12Z900		
F1	5210001050	S.FUS	ICP-S0.5TN	T	51.5/41.1
EP101	6910014730	S.BEA	MPZ2012S331A-T	T	61.7/31
EP102	6910014730	S.BEA	MPZ2012S331A-T	T	40.9/31
EP103	6910014730	S.BEA	MPZ2012S331A-T	T	71.3/16.1
EP201	6910014730	S.BEA	MPZ2012S331A-T	T	19.2/31.5
EP202	6910014730	S.BEA	MPZ2012S331A-T	T	12.4/31

M.=Mounted side (T: Mounted on the Top side, B: Mounted on the Bottom side)
S.=Surface mount

SECTION 6 MECHANICAL PARTS

[FRONT UNIT] (FR)

REF NO.	ORDER NO.	DESCRIPTION	QTY.
W1	8900018460	OPC-1950	1
W2	8900009231	OPC-908A	1
W3	8900017820	OPC-852A	1
W4	8900009231	OPC-908A	1
W5	8900009231	OPC-908A	1
W6	8900009231	OPC-908A	1
W7	8900018480	OPC-1952	1
W8	8900018480	OPC-1952	1
EP1	6910020500	RMS20-250-201-1P/E	1
EP2	6910015650	MOUNT PLATE (S-G2218-3#01)	1
EP3	6910015650	MOUNT PLATE (S-G2218-3#01)	1
MP1	8210025390	3073 FRONT PANEL (Incl. MP13–15)	1
MP2	8010021410	3073 SUB CHASSIS (Incl. MP3)	1
MP3	8930077140	3073 JACK PLATE	1
MP4	8310072650	3073 WINDOW PLATE	1
MP5	8510019120	3073 LOGIC COVER	1
MP11	8930076840	3073 A-LENS	3
MP12	8930076850	3073 B-LENS	5
MP13	8930076860	3073 C-LENS	1
MP14	8930076870	3073 D-LENS	3
MP15	8930076880	3073 E-LENS	1
MP21	8610013940	KNOB K-281 (Incl. MP11)	1
MP22	8610013950	KNOB K-282 (Incl. MP11)	1
MP23	8610013960	KNOB K-283 (Incl. MP12)	1
MP24	8610013810	KNOB K-284	1
MP25	8610013820	KNOB K-285	1
MP26	8610013830	KNOB K-286	1
MP27	8610013970	KNOB K-287 (Incl. MP12)	1
MP28	8610013850	KNOB K-288	1
MP29	8610013860	KNOB K-289	1
MP30	8930076890	3073 KEYBOARD	1
MP31	8610013870	KNOB N-378	3
MP32	8610013880	KNOB N-379	1
MP33	8610013290	KNOB N-361 (Incl. MP39)	3
MP34	8610011830	KNOB N-301 (Incl. MP39)	1
MP35	8610013900	KNOB N-380 (Incl. MP37, 39)	)
MP36	8610011741	KNOB N-307-1 (Incl. MP38)	4
MP37	8610013320	KNOB N-362 RING	1
MP38	8610009240	KNOB SPRING NO.7800P	4
MP39	8610007420	KNOB SPRING NO.6601	5
MP42	8610010040	KNOB N-239 FINGER REST	1
MP43	8930076900	3073 D-RUBBER	1
MP44	8930060190	2591 N-SPRING	1
MP45	8930076990	3073 BRAKE PLATE	1
MP46	8930076910	3073 BRAKE BUTTON (Incl. MP45)	1
MP47	8610013921	KNOB N-268 BASE-3 (Incl. MP42, 44, 51)	1
MP48	8310072900	3073 NAME PLATE	1
MP51	8930077340	3073 BRAKE SHEET	1
MP52	8930077360	3073 BRAKE PAD	2
MP53	8930077370	DOUBLE SIDE TAPE (BB)	2
MP54	8930077380	DOUBLE SIDE TAPE (BC)	2
MP55	8930074750	FERRITE SHEET (V)	1
MP56	8930059330	SHIELD SPONGE (W)	1
MP57	8930074750	FERRITE SHEET (V)	1
MP58	8930029050	THERMAL SHEET (AL)	2
MP61	8810008661	SCREW BT B0 3X8 NI-ZC3 (BT)	4
MP62	8810008661	SCREW BT B0 3X8 NI-ZC3 (BT)	6
MP63	8810008761	SCREW BT B0 2X8 NI-ZC3 (BT)	17
MP64	8930079010	SPONGE (KK)	4
MP65	8930061490	SHIELD SPONGE (AB)	1
MP66	8930055981	SHIELD SPONGE (F)-1	1
MP67	8930055981	SHIELD SPONGE (F)-1	1
MP68	8930055981	SHIELD SPONGE (F)-1	1
MP69	8930059330	SHIELD SPONGE (W)	1

[LOGIC UNIT] (LG)

REF NO.	ORDER NO.	DESCRIPTION	QTY.
J801*	6510021722	30FLT-SM2-TB (LF) (SN) (M)	1
J802*	6510021722	30FLT-SM2-TB (LF) (SN) (M)	1
J901*	6510018921	B8B-PH-SM4-TB (LF) (SN)	1
J1001*	6510024151	50FY-BMT-TB (LF) (SN)	1
J1002*	6510022191	B3B-PH-SM4-TB (LF) (SN)	1
J1101*	6510024151	50FY-BMT-TB (LF) (SN)	1
S51*	2260002740	LS8J2M	1
MP1	8930078890	3073 EARTH SPRING	1
MP2	8930065741	2590 D-EARTH SPRING-1	1
MP4	8930058170	SHIELD SPONGE (O)	1
MP101	8510002280	VCO SHIELD PLATE (A) (FX-15)	1
MP102	8930058700	SHIELD SPONGE (R)	1
MP103	8930079230	3073 SHIELD SPRING	1
MP104	8930071550	SHIELD SPONGE (BM)	2
MP202	8930079230	3073 SHIELD SPRING	1
MP203	8930071550	SHIELD SPONGE (BM)	2
MP601	8930065741	2590 D-EARTH SPRING-1	1
MP851	8510015720	2590 DC-DC A-CASE	1
MP852	8930063980	SHIELD SPONGE (AL)	1
MP871	8510015720	2590 DC-DC A-CASE	1
MP872	8930063980	SHIELD SPONGE (AL)	1

[DISPLAY UNIT] (DS)

REF NO.	ORDER NO.	DESCRIPTION	QTY.
J4*	6510022621	10FMN-BMTTR-A-TBT (LF) (SN)	1
J21*	6510022621	10FMN-BMTTR-A-TBT (LF) (SN)	1
J31*	6510022621	10FMN-BMTTR-A-TBT (LF) (SN)	1
J33*	6510018971	B4B-PH-SM4-TB (LF) (SN)	1
J107	6510026080	XM7A-0441	1
J113*	6510022621	10FMN-BMTTR-A-TBT (LF) (SN)	1
J114*	6510018971	B4B-PH-SM4-TB (LF) (SN)	1
J301*	6510021722	30FLT-SM2-TB (LF) (SN) (M)	1
J407*	6510026740	IMSA-9637S-60Y922	1
J601*	6510026730	IMSA-9637S-08Y902	1
J603*	6510022611	16FMN-BMTTR-A-TBT (LF) (SN)	1
J604*	6510021722	30FLT-SM2-TB (LF) (SN) (M)	1
S1001*	2260002740	LS8J2M	1
S1002*	2260002740	LS8J2M	1
S1003*	2260002740	LS8J2M	1
S1004*	2260002740	LS8J2M	1
S1005*	2260002740	LS8J2M	1
S1006*	2260002740	LS8J2M	1
S1007*	2260002740	LS8J2M	1
S1008*	2260002740	LS8J2M	1
S1009*	2260002740	LS8J2M	1
S1010*	2260002740	LS8J2M	1
S1011*	2260002740	LS8J2M	1
S1012*	2260002740	LS8J2M	1
S1013*	2260002740	LS8J2M	1
S1014*	2260002740	LS8J2M	1
S1015*	2260002740	LS8J2M	1
S1016*	2260002740	LS8J2M	1
S1017*	2260002740	LS8J2M	1
S1018*	2260002740	LS8J2M	1
S1019*	2260002740	LS8J2M	1
S1020*	2260002740	LS8J2M	1
S1021*	2260002740	LS8J2M	1
S1022*	2260002740	LS8J2M	1
S1023*	2260002740	LS8J2M	1
S1024*	2260002740	LS8J2M	1
S1025*	2260002740	LS8J2M	1
S1026*	2260002740	LS8J2M	1
S1027*	2260002740	LS8J2M	1
S1028*	2260002740	LS8J2M	1
S1029*	2260002740	LS8J2M	1
S1030*	2260002740	LS8J2M	1
S1031*	2260002740	LS8J2M	1
S1101*	2260002740	LS8J2M	1
S1102*	2260002740	LS8J2M	1
S1103*	2260002740	LS8J2M	1
S1104*	2260002740	LS8J2M	1
S1105*	2260002740	LS8J2M	1
S1106*	2260002740	LS8J2M	1
S1107*	2260002740	LS8J2M	1
S1108*	2260002740	LS8J2M	1
S1109*	2260002740	LS8J2M	1
S1110*	2260002740	LS8J2M	1
S1111*	2260002740	LS8J2M	1
S1112*	2260002740	LS8J2M	1
S1113*	2260002740	LS8J2M	1
S1201*	2260002740	LS8J2M	1

*: Refer to "**BOARD LAYOUTS**" for the location.
: Refer to "GENERAL WIRING**" for the connection.
Screw abbreviations A, B0, BT: Self-tapping PH: Pan head ZK: Black NI-ZU: Nickel-Zinc SUS: Stainless

[DISPLAY UNIT] (DS)

REF NO.	ORDER NO.	DESCRIPTION	QTY.
S1202*	2260002740	LS8J2M	1
S1203*	2260002740	LS8J2M	1
S1204*	2260002740	LS8J2M	1
S1205*	2260002740	LS8J2M	1
S1206*	2260002740	LS8J2M	1
S1207*	2260002740	LS8J2M	1
S1208*	2260002740	LS8J2M	1
S1209*	2260002740	LS8J2M	1
S1210*	2260002740	LS8J2M	1
S1211*	2260002740	LS8J2M	1
S1212*	2260002740	LS8J2M	1
S1213*	2260002740	LS8J2M	1
S1214*	2260002740	LS8J2M	1
S1215*	2260002740	LS8J2M	1
EP2	6910020190	L5S30853P00	1
MP1	8930077470	3073 EARTH SHIELD	1
MP2	8930077470	3073 EARTH SHIELD	1
MP3	8510002280	VCOSHIELD PLATE (A) (FX-15)	1
MP4	8510002280	VCOSHIELD PLATE (A) (FX-15)	1
MP11	8930077000	3073 LCD HOLDER	1
MP12	8930078950	3073 A-LCD SPONGE	1
MP13	8930062550	SPONGE (HP)	4
MP23	8930043610	INSULATION SHEET (EZ)	1
MP24	8930043610	INSULATION SHEET (EZ)	1
MP33	8930072060	SHIELD SPONGE (BU)	1
MP34	8930072060	SHIELD SPONGE (BU)	1
MP35	8930055981	SHIELD SPONGE (F)-1	1
MP36	8930055981	SHIELD SPONGE (F)-1	1
MP37	8930055981	SHIELD SPONGE (F)-1	1
MP38	8930049131	SHIELD TAPE (D)-1	1
MP39	8930049131	SHIELD TAPE (D)-1	1
MP40	8930049131	SHIELD TAPE (D)-1	1
MP41	8930049131	SHIELD TAPE (D)-1	1
MP51	8930058700	SHIELD SPONGE (R)	1
MP52	8930058700	SHIELD SPONGE (R)	1
MP53	8930058700	SHIELD SPONGE (R)	1

[VR-A UNIT] (VRA)

REF NO.	ORDER NO.	DESCRIPTION	QTY.
R1	7210002970	RV-314 (RK0972210 10KB/10KB)	1
R2	7210002970	RV-314 (RK0972210 10KB/10KB)	1
J32*	6510022621	10FMN-BMTTR-A-TBT (LF) (SN)	
J33*	6510022611	16FMN-BMTTR-A-TBT (LF) (SN)	

[VR-B UNIT] (VRB)

REF NO.	ORDER NO.	DESCRIPTION	QTY.
R1	7210002970	RV-314 (RK0972210 10KB/10KB)	1
J1*	6510022621	10FMN-BMTTR-A-TBT (LF) (SN)	1
S1	2250000410	TP90D96E20-30F-2178-1	1

[VR-C UNIT] (VRC)

REF NO.	ORDER NO.	DESCRIPTION	QTY.
R1	7210001130	RK097111T005A 10KB	1
R2	7210001130	RK097111T005A 10KB	1
R3	7210001130	RK097111T005A 10KB	1
R4	7210001130	RK097111T005A 10KB	1
J1*	6510022621	10FMN-BMTTR-A-TBT (LF) (SN)	1

[RIT UNIT] (RIT)

REF NO.	ORDER NO.	DESCRIPTION	QTY.
J1*	6510022621	10FMN-BMTTR-A-TBT (LF) (SN)	1
S1	2250000650	EVEGC2F2524B	1

[MIC UNIT] (MIC)

REF NO.	ORDER NO.	DESCRIPTION	QTY.
J1	6510000191	FM214-8SS (P)-1	1
J2*	6510022621	10FMN-BMTTR-A-TBT (LF) (SN)	1

[JACK UNIT] (JCK)

REF NO.	ORDER NO.	DESCRIPTION	QTY.
J1*	6510022621	10FMN-BMTTR-A-TBT (LF) (SN)	1
J2	6510023891	S-G4617#01F	1
J102	6510023900	LGR4619-7000	1

*: Refer to "**BOARD LAYOUTS**" for the location.
: Refer to "GENERAL WIRING**" for the connection.
Screw abbreviations A, B0, BT: Self-tapping PH: Pan head ZK: Black NI-ZU: Nickel-Zinc SUS: Stainless

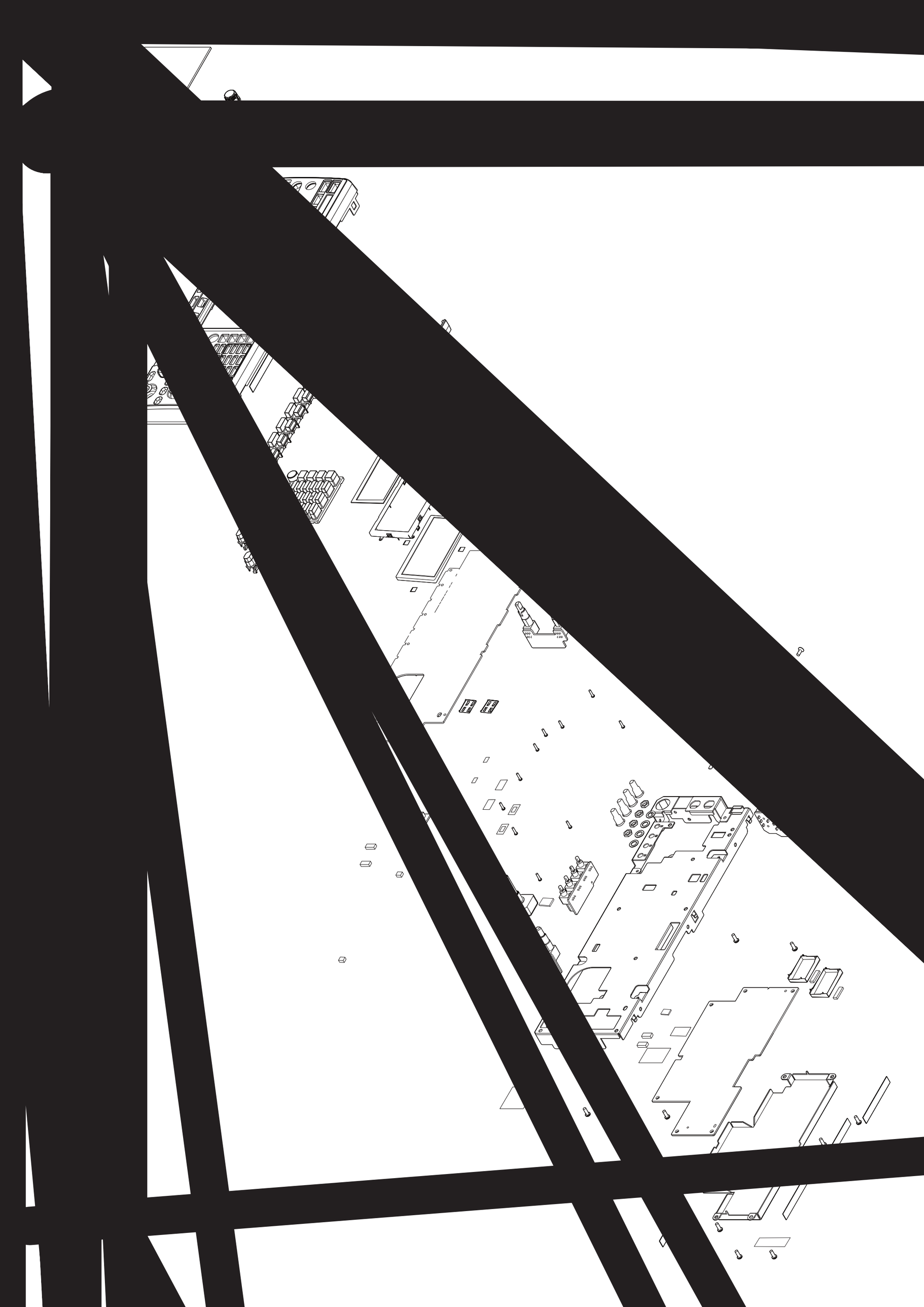

[CHASSIS PARTS] (CH)

REF NO.	ORDER NO.	DESCRIPTION	QTY.
J5	6510000370	MR-DS	1
J6	6510000370	MR-DS	1
P15	6510009330	51006-0200	1
SP1	2510000761	SM-C77KY0208	1
MF1	2710000630	FBA08T12HC	1
W1	8900014720	OPC-909A	1
W2	8900015160	OPC-916A	1
W3	8900018470	OPC-1951	1
W4	8900017130	OPC-926A	1
W5	8900017130	OPC-926A	1
W6	8900015170	OPC-918A	1
W7	8900018640	OPC-1964	1
W8	8900018640	OPC-1964	1
W11	8900018430	OPC-1891	1
W12	8900018440	OPC-1944	1
W13	8900018720	OPC-1967	1
W15	9030730010	51/99/220/A14A/W11A	1
W16	9012410001	WIRE 00 A	1
W17	8900018450	OPC-1948	1
W21	9025900110	62/99/300/C31/C31	1
W22	9011450130	WIRE /08/	1
W23	9025900590	62/99/360/C31/C31	1
W24	9011450130	WIRE /08/	1
W25	9030730040	62/99/200/C31/C31	1
W26	9011450130	WIRE /08/	1
W27	9025900560	62/99/330/C31/C31	1
W28	9011450130	WIRE /08/	1
W29	9025900270	62/99/240/C31/C31	1
W30	9011450130	WIRE /08/	1
W31	9025900540	62/99/270/C31/C31	1
W32	9011450130	WIRE /08/	1
W33	9030730040	62/99/200/C31/C31	1
W34	9011450130	WIRE /08/	1
W35	9025900290	62/99/150/C31/C31	1
W36	9011450130	WIRE /08/	1
W37	9025900110	62/99/300/C31/C31	1
W38	9011450130	WIRE /08/	1
W39	9024290050	62/99/130/C31/C31	1
W40	9011450130	WIRE /08/	1
W41	9030730030	62/99/650/C31/C31	1
W42	9011450130	WIRE /08/	1
W43	9025900110	62/99/300/C31/C31	1
W44	9011450130	WIRE /08/	1
W45	9030730040	62/99/200/C31/C31	1
W46	9011450130	WIRE /08/	1
W47	9026200020	62/99/190/C31/C31	1
W48	9011450130	WIRE /08/	1
W49	9026200020	62/99/190/C31/C31	1
W50	9011450130	WIRE /08/	1
EP1	6910000340	P101 KD MYLAR SHEET	1
EP2	6910000310	B312D INSULATION BUSH	1
MP1	8010021340	3073 CHASSIS	1
MP2	8110009680	3073 U-COVER (Incl. MP19, 113)	1
MP3	8110009600	3073 L-COVER	1
MP4	8930077240	3073 MAIN PLATE	1
MP5	8510010731	1876 B-PLATE-1	1
MP6	8510010740	1876 C-PLATE	1
MP7	8510010752	1876 D-PLATE-2	1
MP8	8930077030	3073 MAIN STAND	2
MP9	8930077040	3073 SUB STAND	2
MP11	8930077020	3073 A-STAND SHEET	2
MP12	8930077490	3073 B-STAND SHEET	2
MP13	8930029731	1413 FAN HOLDER-1	1
MP15	8930037001	1691 EARTH PLATE-1	2
MP16	8930078210	3073 IC CLIP	2
MP17	8930035240	1546 TR-B CLIP	1
MP18	8950003640	COATING CLIP CS-2	1
MP19	8930036070	1528 SP NET	1
MP20	8810005771	SCREW BiH M3X8 ZK3	10
MP21	8810005771	SCREW BiH M3X8 ZK3	6
MP22	8810008661	SCREW BT B0 3X8 NI-ZC3 (BT)	4
MP23	8810008661	SCREW BT B0 3X8 NI-ZC3 (BT)	11
MP24	8810008661	SCREW BT B0 3X8 NI-ZC3 (BT)	3
MP25	8810008661	SCREW BT B0 3X8 NI-ZC3 (BT)	6
MP26	8810008661	SCREW BT B0 3X8 NI-ZC3 (BT)	2
MP27	8810008661	SCREW BT B0 3X8 NI-ZC3 (BT)	2
MP28	8810008661	SCREW BT B0 3X8 NI-ZC3 (BT)	2
MP31	8810008661	SCREW BT B0 3X8 NI-ZC3 (BT)	4
MP32	8810008661	SCREW BT B0 3X8 NI-ZC3 (BT)	7
MP33	8810008661	SCREW BT B0 3X8 NI-ZC3 (BT)	5
MP34	8810008661	SCREW BT B0 3X8 NI-ZC3 (BT)	4
MP35	8810008661	SCREW BT B0 3X8 NI-ZC3 (BT)	4
MP36	8810008661	SCREW BT B0 3X8 NI-ZC3 (BT)	10
MP37	8810008661	SCREW BT B0 3X8 NI-ZC3 (BT)	8
MP38	8810008661	SCREW BT B0 3X8 NI-ZC3 (BT)	4
MP40	8810008661	SCREW BT B0 3X8 NI-ZC3 (BT)	3
MP41	8810008160	HEX HEAD BOLT (+) M5X18 NI	1
MP42	8830000211	NUT M5 BS-CD NI	1

[CHASSIS PARTS] (CH)

REF NO.	ORDER NO.	DESCRIPTION	QTY.
MP43	8830000360	BUTTERFLY NUT M5 NI	1
MP44	8850000150	FLAT WASHER M5 BS NI	3
MP45	8850000440	S-WASHER M5 NI	1
MP46	8810003171	SETSCREW (A) 3X8 ZC3	3
MP47	8810003171	SETSCREW (A) 3X8 ZC3	4
MP48	8810000421	SCREW PH M4X18 ZC3	2
MP49	8810009651	SCREW FLAT-HEAD B0 3X8 NI-ZC3 (BT)	4
MP53	8930077650	3073 SIDE HANDLE	1
MP54	8810010870	SCREW PAN-HEAD M4X12 ZK3	2
MP57	8930027900	SPONGE (DD)	2
MP58	8930038820	ALMINIUM SHEET (V)	1
MP61	8810003161	SETSCREW (A) 3X6 ZC3	2
MP63	8810003161	SETSCREW (A) 3X6 ZC3	2
MP65	8930043281	SPONGE (EW)-1	1
MP66	8930043800	DOUBLESIDED TAPE (S)	1
MP67	8930029050	THERMAL SHEET (AL)	1
MP68	8930032130	HIMELON SHEET (AQ)	2
MP69	8930029050	THERMAL SHEET (AL)	1
MP70	8930008670	SPONGE (AQ)	2
MP71	8930043490	SPONGE (FB)	1
MP72	8930007840	THERMAL SHEET (K)	2
MP88	8930052271	SHIELD SPONGE (D)-1	1
MP89	8930052271	SHIELD SPONGE (D)-1	1
MP90	8930052271	SHIELD SPONGE (D)-1	1
MP91	8930039570	RUBBER SHEET (U)	3
MP92	8930069610	SPONGE (IV)	1
MP93	8930059520	NONWOVENS SHEET (CG)	2
MP94	8930057950	DOUBLESIDED TAPE (AH)	1
MP95	8930071700	PJ-21B	1
MP106	8930075440	3015 RUG SPRING	2
MP109	8930040590	RUBBER REG (K)	2
MP110	8930046120	RUBBER REG (M)	4
MP111	8930079200	THERMALLY SHEET (BR)	1
MP112	8930079060	3073 DC PLATE	1
MP113	8930077500	3073 A-NET	1
MP114	8930070740	1958 MAGNETIC SHIELD	1
MP115	8930079000	SHIELD SPONGE (CN)	1
MP116	8930070510	THERMALLY SHEET (BF)	1
MP153	8930058170	SHIELD SPONGE (O)	1
MP154	8930058170	SHIELD SPONGE (O)	1
MP155	8930058170	SHIELD SPONGE (O)	1
MP156	8930058170	SHIELD SPONGE (O)	1
MP157	8930066040	SPONGE (IK)	1
MP158	8930071220	SPONGE (JI)	1
MP159	8930048121	SHIELD TAPE (A)-1	2
MP160	8930058840	SHIELD SPONGE (T)	2

[PA UNIT] (PA)

REF NO.	ORDER NO.	DESCRIPTION	QTY.
RL1	6330001471	AJS1311F-K2	1
CP1*	6910009670	HK3-S-T	1
CP2*	6910009670	HK3-S-T	1
J1	6510007020	TMP-J01X-V6	1
J2	6510007020	TMP-J01X-V6	1
J3*	6510022601	30FMN-BMTTR-A-TBT (LF) (SN)	1
J10	6510003081	RT01T-1.0B (LF)	1
J101*	6510018961	B2B-PH-SM4-TB (LF) (SN)	1
F1	5220000400	FHA010-01F	1
F2	5210000940	1205	1
W14	8970023510	23/06/050/D21/W05	1
EP4	6510018330	F4053A	1
EP5	6510018330	F4053A	1

*: Refer to "**BOARD LAYOUTS**" for the location.
: Refer to "GENERAL WIRING**" for the connection.
Screw abbreviations A, B0, BT: Self-tapping PH: Pan head ZK: Black NI-ZU: Nickel-Zinc SUS: Stainless

[FILTER UNIT] (FIT)

REF NO.	ORDER NO.	DESCRIPTION	QTY.
RL101*	6330001721	ATN207-K1	1
RL102*	6330001721	ATN207-K1	1
RL151*	6330001721	ATN207-K1	1
RL152*	6330001721	ATN207-K1	1
RL201*	6330001721	ATN207-K1	1
RL202*	6330001721	ATN207-K1	1
RL251*	6330001721	ATN207-K1	1
RL252*	6330001721	ATN207-K1	1
RL301*	6330001721	ATN207-K1	1
RL302*	6330001721	ATN207-K1	1
RL351*	6330001721	ATN207-K1	1
RL352*	6330001721	ATN207-K1	1
RL401*	6330001721	ATN207-K1	1
RL402*	6330001721	ATN207-K1	1
J1	6510007020	TMP-J01X-V6	1
J2	6510007020	TMP-J01X-V6	1
J3*	6510022621	10FMN-BMTTR-A-TBT (LF) (SN)	1
W9	8900009621	OPC-961A	1
W10	8900009631	OPC-962A	1
EP501	6510018330	F4053A	1
EP502	6510018330	F4053A	1

[CTRL UNIT] (CTR)

REF NO.	ORDER NO.	DESCRIPTION	QTY.
RL101*	6330000800	G5A-237P DC12V	1
RL102*	6330001770	SIP-1A-12Y	1
RL103*	6330001770	SIP-1A-12Y	1
RL104*	6330001460	FTR-F1 CA012V	1
RL105*	6330001460	FTR-F1 CA012V	1
CP1*	6910009670	HK3-S-T	1
J3	6510017150	TMP-S01X-C1	1
J101	6510017150	TMP-S01X-C1	1
J102	6510017150	TMP-S01X-C1	1
J103	6510017150	TMP-S01X-C1	1
J151*	6510022591	22FMN-BMTTR-A-TBT (LF) (SN)	1
J241*	6510022031	B10B-ZR-SM4-TF (LF) (SN)	1
J261*	6510022621	10FMN-BMTTR-A-TBT (LF) (SN)	1
J262*	6510022581	24FMN-BMTTR-A-TBT (LF) (SN)	1
J291*	6510018971	B4B-PH-SM4-TB (LF) (SN)	1
W1	7120000490	ERD25T0	1
W2	7120000490	ERD25T0	1
MP1*	8510002020	MIXSHIELD CASE (SX-155)	1

[MAIN UNIT] (MA)

REF NO.	ORDER NO.	DESCRIPTION	QTY.
RL2301*	6330001721	ATN207-K1	1
RL2302*	6330001721	ATN207-K1	1
CP1253*	6910009670	HK3-S-T	1
J1002*	6510024151	50FY-BMT-TB (LF) (SN)	1
J1003	6510021861	BH-800-4GG	1
J1051*	6510024151	50FY-BMT-TB (LF) (SN)	1
J1501*	6510022601	30FMN-BMTTR-A-TBT (LF) (SN)	1
J1601*	6510022581	24FMN-BMTTR-A-TBT (LF) (SN)	1
J1701*	6510022581	24FMN-BMTTR-A-TBT (LF) (SN)	1
J1801*	6510022581	24FMN-BMTTR-A-TBT (LF) (SN)	1
J1901	6510024311	B4B-PH-K-S (LF) (SN)	1
J2001	6510023671	TCS4480-0141577	1
J2002	6510023661	TCS4470-0141577	1
J2101	6510026540	UBB-4R-D14T-4D (LF) (SN)	1
J2201	6510023720	LGY6501-0600C	1
J2301	6510024311	B4B-PH-K-S (LF) (SN)	1
J2302	6510023720	LGY6501-0600C	1
J2401	6510023720	LGY6501-0600C	1
J2501	6510023900	LGR4619-7000	1
J2502	6510024311	B4B-PH-K-S (LF) (SN)	1
J3001	6510007020	TMP-J01X-V6	1
J3401	6510007020	TMP-J01X-V6	1
J3701	6510007020	TMP-J01X-V6	1
J3702	6510007020	TMP-J01X-V6	1
J4101*	6510022801	B10B-PH-SM4-TB (LF) (SN)	1
J6001	6510007020	TMP-J01X-V6	1
J6002	6510007020	TMP-J01X-V6	1
J6102	6510026920	IMSA-9180B-12B-PT1	1
BT1001	3020000110	CR2032	1
W6001	7120000490	ERD25T0	1

[MAIN UNIT] (MA)

REF NO.	ORDER NO.	DESCRIPTION	QTY.
MP2101	8510015720	2590 DC-DC A-CASE	1
MP2201	8930065741	2590 D-EARTH SPRING-1	1
MP2301	8930065741	2590 D-EARTH SPRING-1	1
MP2501	8930065741	2590 D-EARTH SPRING-1	1
MP3001*	8510015900	2590 M-2LO CASE	1
MP3201*	8510012400	2177 D/A CASE	1
MP3202*	8510012400	2177 D/A CASE	1
MP3601*	6910001130	10M SHIELD CASE	1
MP3602*	8510005150	602 SHIELD CASE	1
MP3603	8510005160	602 SHIELD CASE COVER	1
MP3604	8510002280	VCOSHIELD PLATE (A) (FX-15)	1
MP3605	8930059380	SHIELD SPONGE (X)	1
MP3606	8930058840	SHIELD SPONGE (T)	1
MP4501	8510010460	1691 MAIN SHIELD PLATE	1
MP4502	8510002280	VCOSHIELD PLATE (A) (FX-15)	1
MP4503	8930065720	SHIELD SPONGE (AP)	1
MP5001	8930065741	2590 D-EARTH SPRING-1	1
MP5101	8930065741	2590 D-EARTH SPRING-1	1
MP6001*	8510012400	2177 D/A CASE	1
MP6002*	8510012400	2177 D/A CASE	1
MP6003*	8510013140	2241 DC-A CASE	1
MP6004*	8510013140	2241 DC-A CASE	1
MP6005*	8510019400	3073 M-CASE	1
MP6006	8510019410	3073 M-COVER	1
MP6007	8510013820	2356 A-SHIELD PLATE	1
MP6008	8930065741	2590 D-EARTH SPRING-1	1
MP6009	8930065741	2590 D-EARTH SPRING-1	1

[MCF-N UNIT] (M-N)

REF NO.	ORDER NO.	DESCRIPTION	QTY.
EP6001*	6910002161	CASE-BM7H-LF	1
EP6002*	6910002161	CASE-BM7H-LF	1

[MCF-M UNIT] (M-M)

REF NO.	ORDER NO.	DESCRIPTION	QTY.
EP5001*	6910002161	CASE-BM7H-LF	1
EP5002*	6910002161	CASE-BM7H-LF	1
EP7001*	6910002161	CASE-BM7H-LF	1
EP7002*	6910002161	CASE-BM7H-LF	1

[MCF-W UNIT] (M-W)

REF NO.	ORDER NO.	DESCRIPTION	QTY.
EP7001*	6910002161	CASE-BM7H-LF	1
EP7002*	6910002161	CASE-BM7H-LF	1

*: Refer to "**BOARD LAYOUTS**" for the location.
: Refer to "GENERAL WIRING**" for the connection.
Screw abbreviations A, B0, BT: Self-tapping PH: Pan head ZK: Black NI-ZU: Nickel-Zinc SUS: Stainless

[RF UNIT] (RF)

REF NO.	ORDER NO.	DESCRIPTION	QTY.
RL101	6330001860	UA2-12NU	1
RL102	6330001860	UA2-12NU	1
RL103	6330001860	UA2-12NU	1
RL104	6330001860	UA2-12NU	1
RL105	6330001860	UA2-12NU	1
RL161	6330000540	OMR-109F	1
J101	6510007020	TMP-J01X-V6	1
J102	6450001130	JPJ2042-01-110	1
J103	6450001800	JPJ1044-01-010	1
J161	6450001130	JPJ2042-01-110	1
J201	6510007020	TMP-J01X-V6	1
J451*	6510022581	24FMN-BMTTR-A-TBT (LF) (SN)	1
J801	6910016430	IMSA-9210B-1-05Z869-PT1	1
J802	6910016430	IMSA-9210B-1-05Z869-PT1	1
J803	6910016430	IMSA-9210B-1-05Z869-PT1	1
J804	6910016430	IMSA-9210B-1-05Z869-PT1	1
J805	6910016430	IMSA-9210B-1-05Z869-PT1	1
J807	6910016430	IMSA-9210B-1-05Z869-PT1	1
J809	6910016430	IMSA-9210B-1-05Z869-PT1	1
J951	6510007020	TMP-J01X-V6	1
J1101	6510007020	TMP-J01X-V6	1
J1301	6510007020	TMP-J01X-V6	1
J1651	6510007020	TMP-J01X-V6	1
J1701	6510007020	TMP-J01X-V6	1
J1702	6910004741	IMSA-9202B-1-03Z041-PT1	1
J1703	6910004741	IMSA-9202B-1-03Z041-PT1	1
J1704	6910004741	IMSA-9202B-1-03Z041-PT1	1
J1705	6910004741	IMSA-9202B-1-03Z041-PT1	1
J1706	6910004741	IMSA-9202B-1-03Z041-PT1	1
J1707	6910004741	IMSA-9202B-1-03Z041-PT1	1
J1708	6910004741	IMSA-9202B-1-03Z041-PT1	1
J1709	6910004741	IMSA-9202B-1-03Z041-PT1	1
J2001	6510007020	TMP-J01X-V6	1
MP1	8930065741	2590 D-EARTH SPRING-1	1
MP2	8930065741	2590 D-EARTH SPRING-1	1
MP3	8930065741	2590 D-EARTH SPRING-1	1
MP1001*	8510016730	2178 1MIX CASE	1
MP1002	8510016721	2178 1MIX COVER-1	1
MP1201*	8510016730	2178 1MIX CASE	1
MP1202	8510016721	2178 1MIX COVER-1	1
MP1203	8930055981	SHIELD SPONGE (F)-1	1
MP1451*	8510012400	2177 D/A CASE	1

[PLL UNIT] (PLL)

REF NO.	ORDER NO.	DESCRIPTION	QTY.
J1*	6510022581	24FMN-BMTTR-A-TBT (LF) (SN)	1
J51	6510007020	TMP-J01X-V6	1
J81	6510007020	TMP-J01X-V6	1
J351	6510007020	TMP-J01X-V6	1
J651	6510007020	TMP-J01X-V6	1
J701	6510007020	TMP-J01X-V6	1
J831	6510007020	TMP-J01X-V6	1
J851	6510007020	TMP-J01X-V6	1
MP1	8930065741	2590 D-EARTH SPRING-1	1
MP51	8510015900	2590 M-2LO CASE	1
MP101*	8510018770	3009 PLL CASE	1
MP102	8510002280	VCOSHIELD PLATE (A) (FX-15)	1
MP103	8930078840	SHIELD SPONGE (CM)	1
MP201*	8510012541	2178 VCO CASE-1	1
MP202	8510011521	2072 VCO COVER-1	1
MP203	8510011710	2072 VCO SHIELD	1
MP204	8810003961	SETSCREW (A) 2.6X5 ZC3	8
MP205	8930077460	RUBBER SHEET (CF)	1
MP206	8930078840	SHIELD SPONGE (CM)	1
MP207	8930078840	SHIELD SPONGE (CM)	1
MP208	8930078840	SHIELD SPONGE (CM)	1
MP209	8930078840	SHIELD SPONGE (CM)	1
MP301*	8510019110	3073 PLL CASE	1
MP381*	8510012550	2178 DDS CASE	1
MP382	8510012580	2178 DDS COVER	1
MP401	8510010760	1876 DDS CASE	1
MP402	8510010770	1876 DDS COVER	1
MP403*	8510010850	1897 D/A CASE	1
MP451*	8510012550	2178 DDS CASE	1
MP452	8510012580	2178 DDS COVER	1
MP501	8510012541	2178 VCO CASE-1	1
MP502	8510011521	2072 VCO COVER-1	1
MP503	8510011710	2072 VCO SHIELD	1
MP601*	8510019110	3073 PLL CASE	1
MP701*	8510018770	3009 PLL CASE	1
MP702	8930078840	SHIELD SPONGE (CM)	1
MP821*	8510012400	2177 D/A CASE	1

[DCDC UNIT] (DC)

REF NO.	ORDER NO.	DESCRIPTION	QTY.
J1	6910020210	IMSA-9180S-12A	1
F1	5210001050	ICP-S0.5	1
MP1*	8510019150	3073 DC-DC SHIELD	1
MP2*	8510019140	3073 DC-DC CASE	1
MP3	8510019300	3073 DC-DC PLATE	1

[TUNER UNIT] (TUN)

REF NO.	ORDER NO.	DESCRIPTION	QTY.
RL1	6330001610	NY-12W-K-IE	1
RL2	6330001610	NY-12W-K-IE	1
RL3	6330001610	NY-12W-K-IE	1
RL4	6330001610	NY-12W-K-IE	1
RL5	6330001610	NY-12W-K-IE	1
RL6	6330001610	NY-12W-K-IE	1
RL7	6330001610	NY-12W-K-IE	1
RL8	6330001610	NY-12W-K-IE	1
RL9	6330001610	NY-12W-K-IE	1
RL10	6330001610	NY-12W-K-IE	1
RL11	6330001610	NY-12W-K-IE	1
RL12	6330001610	NY-12W-K-IE	1
RL13	6330001610	NY-12W-K-IE	1
RL14	6330001610	NY-12W-K-IE	1
RL15	6330001610	NY-12W-K-IE	1
RL16	6330001610	NY-12W-K-IE	1
J3	6510007020	TMP-J01X-V6	1
J4	6510007020	TMP-J01X-V6	1
J5*	6510022591	22FMN-BMTTR-A-TBT (LF) (SN)	1
MF1	2710000800	MP24ZA	1
MF2	2710000800	MP24ZA	1
W1	8900018420	OPC-1889	1
MP1	8930041091	1876 A-ANGLE-1	1
MP2	8810008661	SCREW BT B0 3X8 NI-ZC3 (BT)	1
MP3	8810009061	SCREW M3X6 ZK3	4
MP4	8930041111	1876 B-ANGLE-1	1
MP5	8810009061	SCREW M3X6 ZK3	2
MP6	8820000881	1528 SCREW-1	4
MP7	8930030112	1414 PLATE-2	2
MP8	8950003200	UJ6-5 (UNIVERSAL COUPLINGS)	2
MP9*	8930051580	2178 TUNER PLATE	1
MP10	8930079540	3073 TUNER PLATE	1

[ACCESSORIES] (ACC)

REF NO.	ORDER NO.	DESCRIPTION	QTY.
P1	5610000410	AP-319	1
MC1	(Optional)	HM-36-1	1
F1	5210000840	ATC 30	2
F2	5210000940	1205	1
W1	8900013980	OPC-1457	1

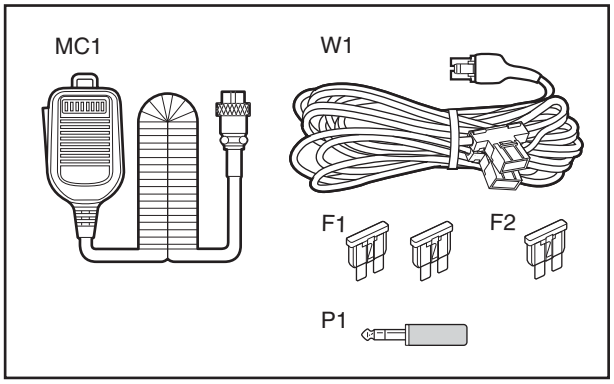

*: Refer to "**BOARD LAYOUTS**" for the location.
: Refer to "GENERAL WIRING**" for the connection.
Screw abbreviations A, B0, BT: Self-tapping PH: Pan head ZK: Black NI-ZU: Nickel-Zinc SUS: Stainless

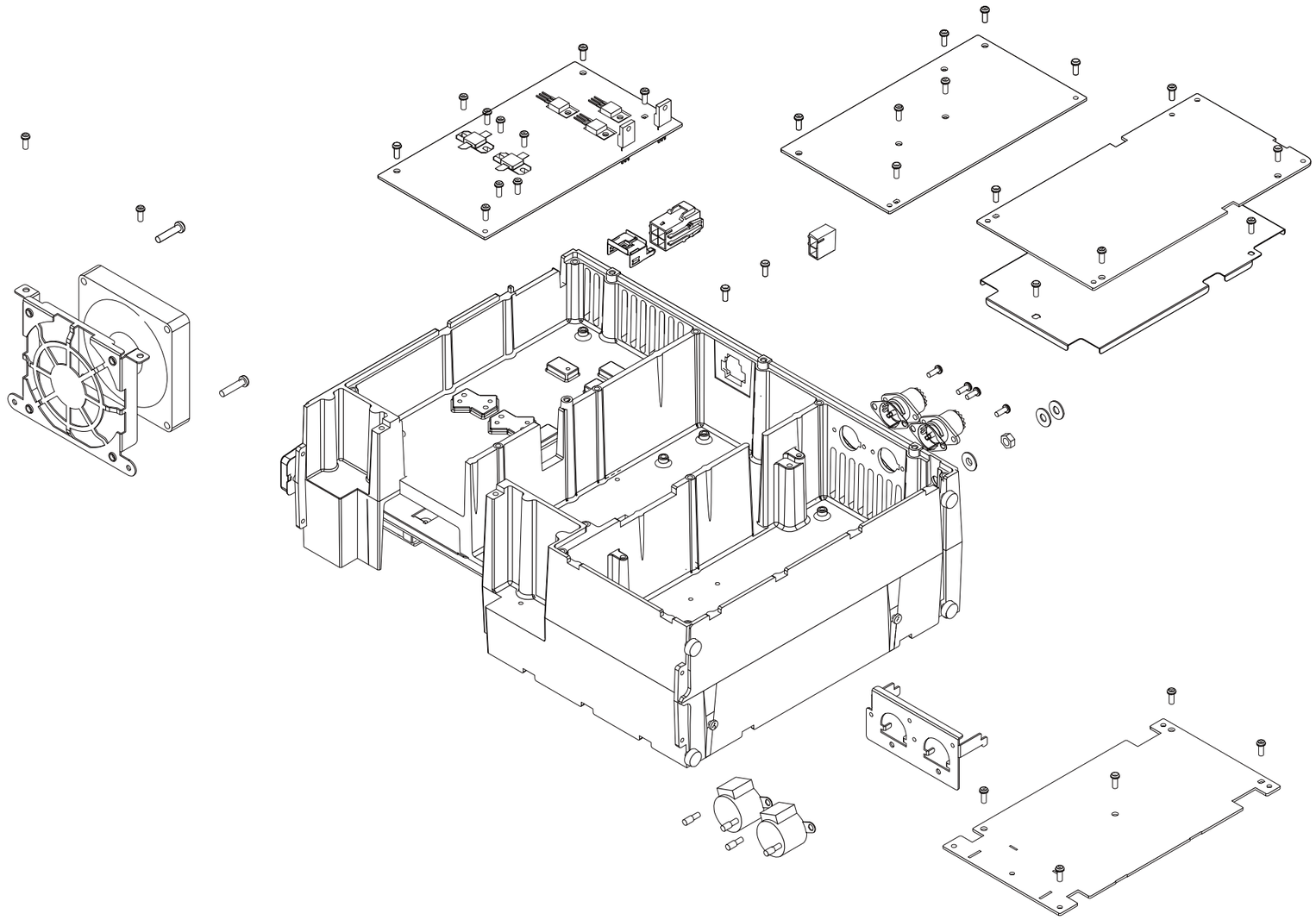

• **CHASSIS (BOTTOM SIDE)**

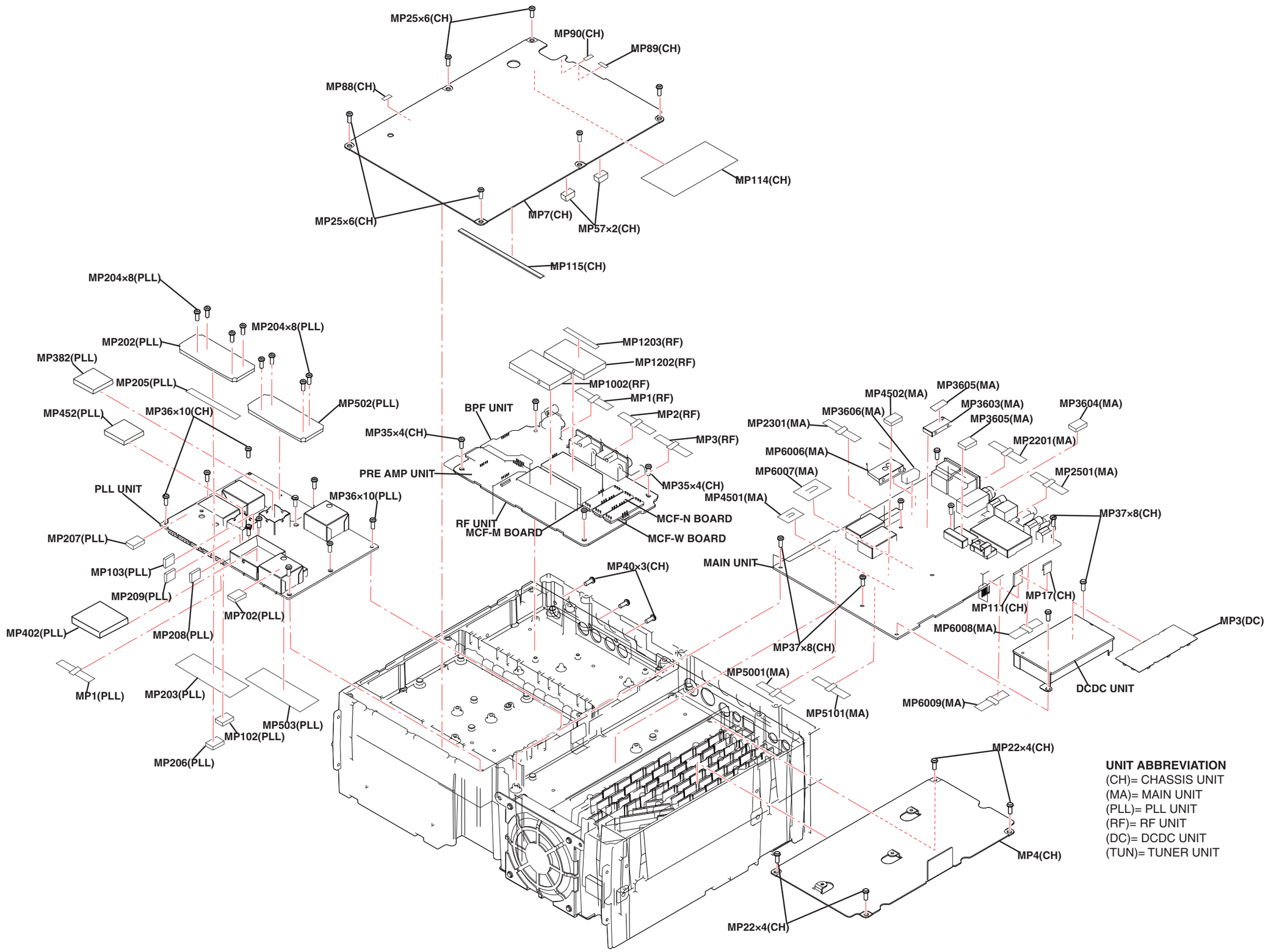

UNIT ABBREVIATION
(CH)= CHASSIS UNIT
(MA)= MAIN UNIT
(PLL)= PLL UNIT
(RF)= RF UNIT
(DC)= DCDC UNIT
(TUN)= TUNER UNIT

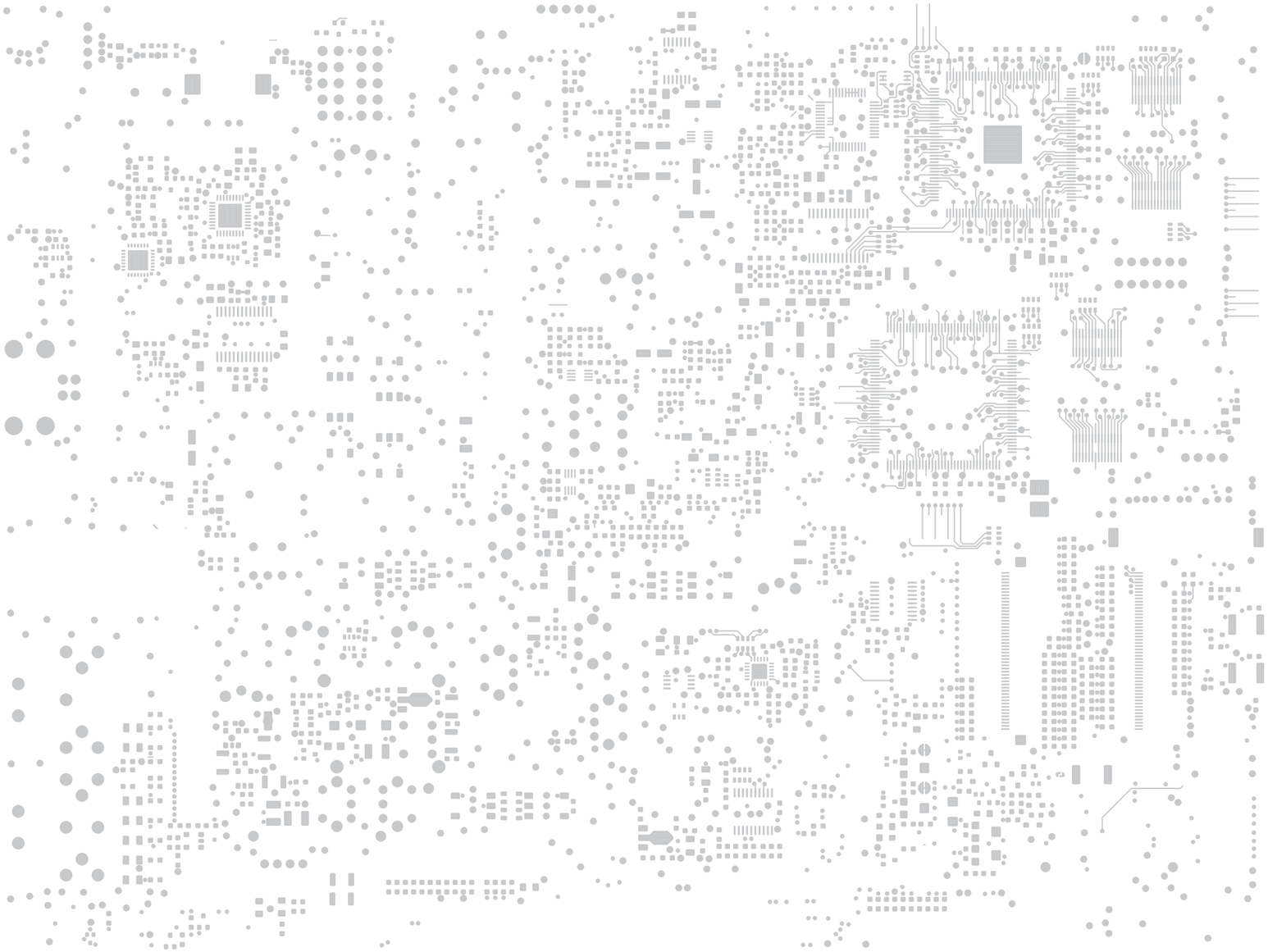

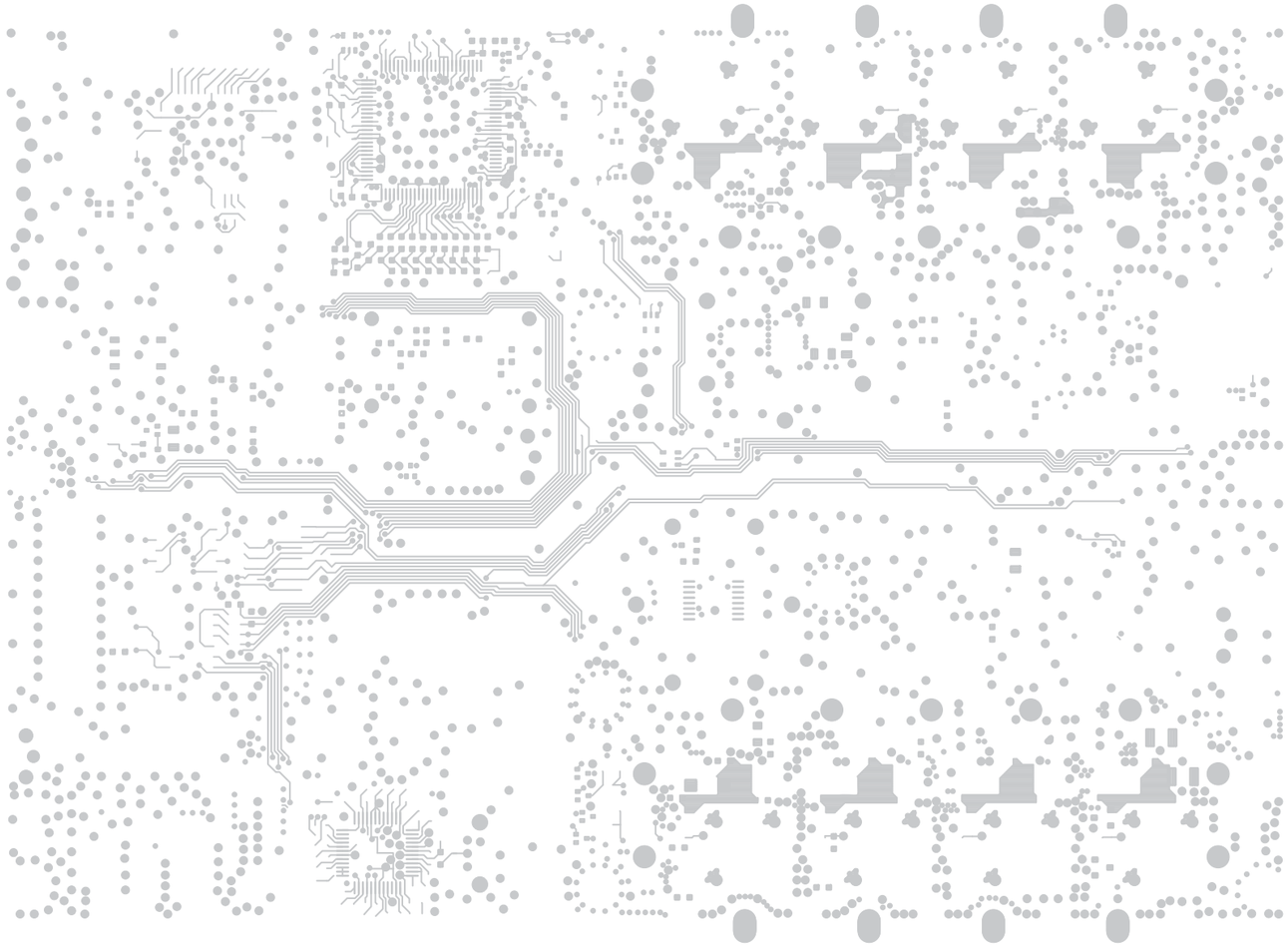

The combination of this side and the bottom side shows the board layout in the same configuration as the actual P.C.Board.

• **PRE AMP BOARD (BOTTOM VIEW)**

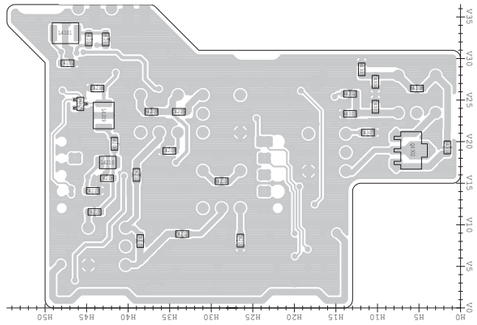

• **DCDC BOARD (BOTTOM VIEW)**

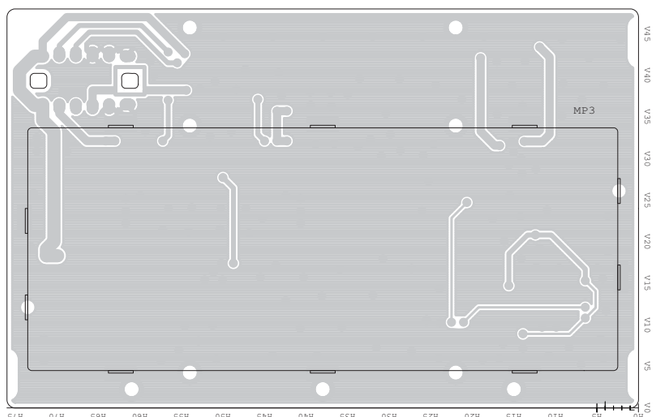

• **PLL UNIT (BOTTOM VIEW)**

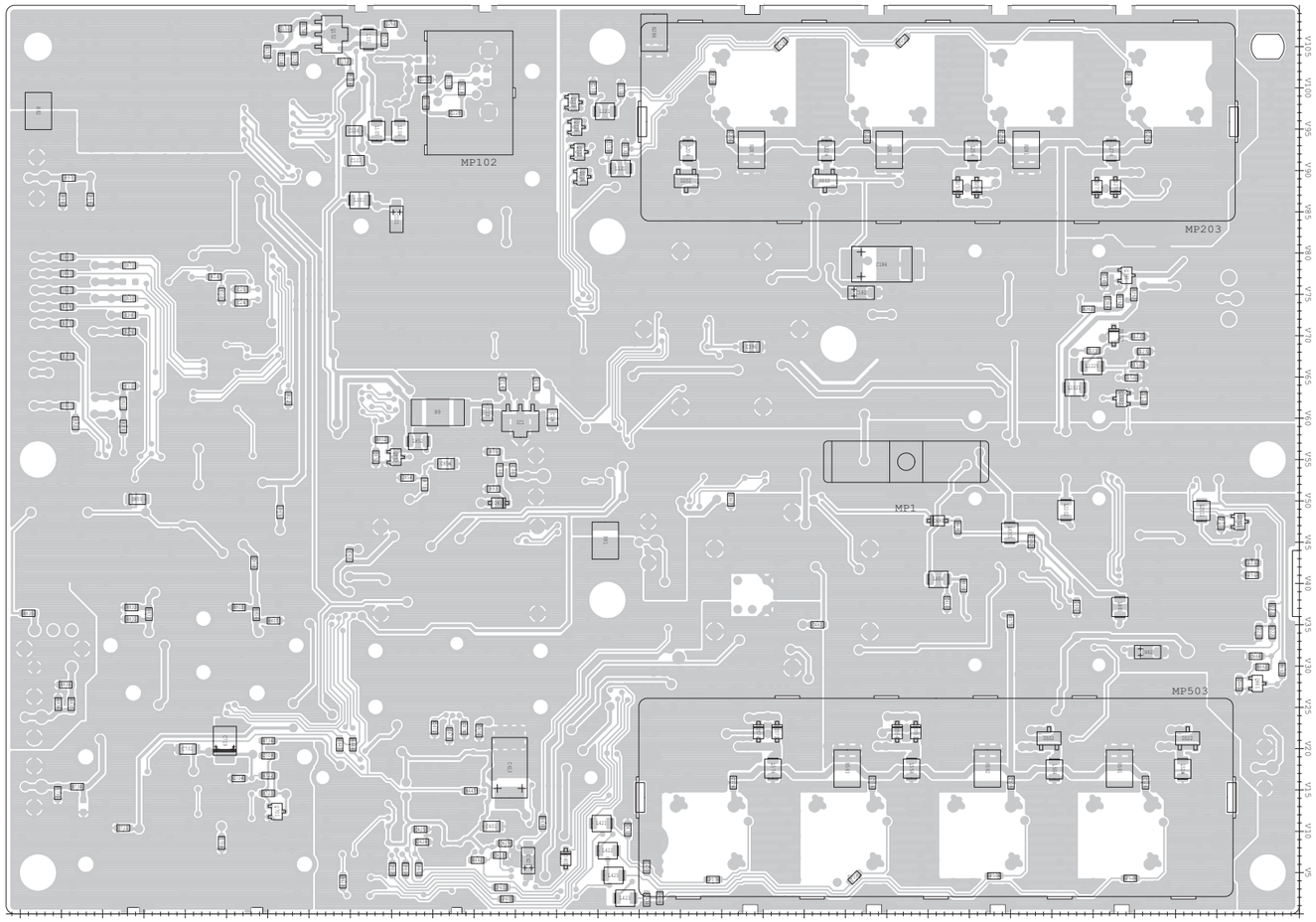

The combination of this side and the bottom side shows the board layout in the same configuration as the actual P.C.Board.

• **BPF BOARD (BOTTOM VIEW)**

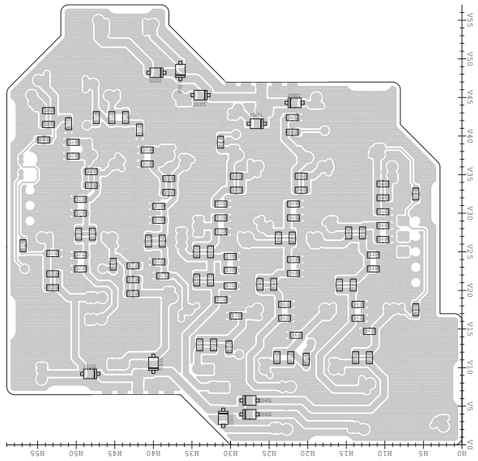

• **RIT BOARD (BOTTOM VIEW)**

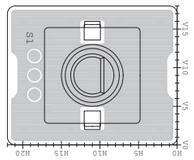

• **RF UNIT (BOTTOM VIEW)**

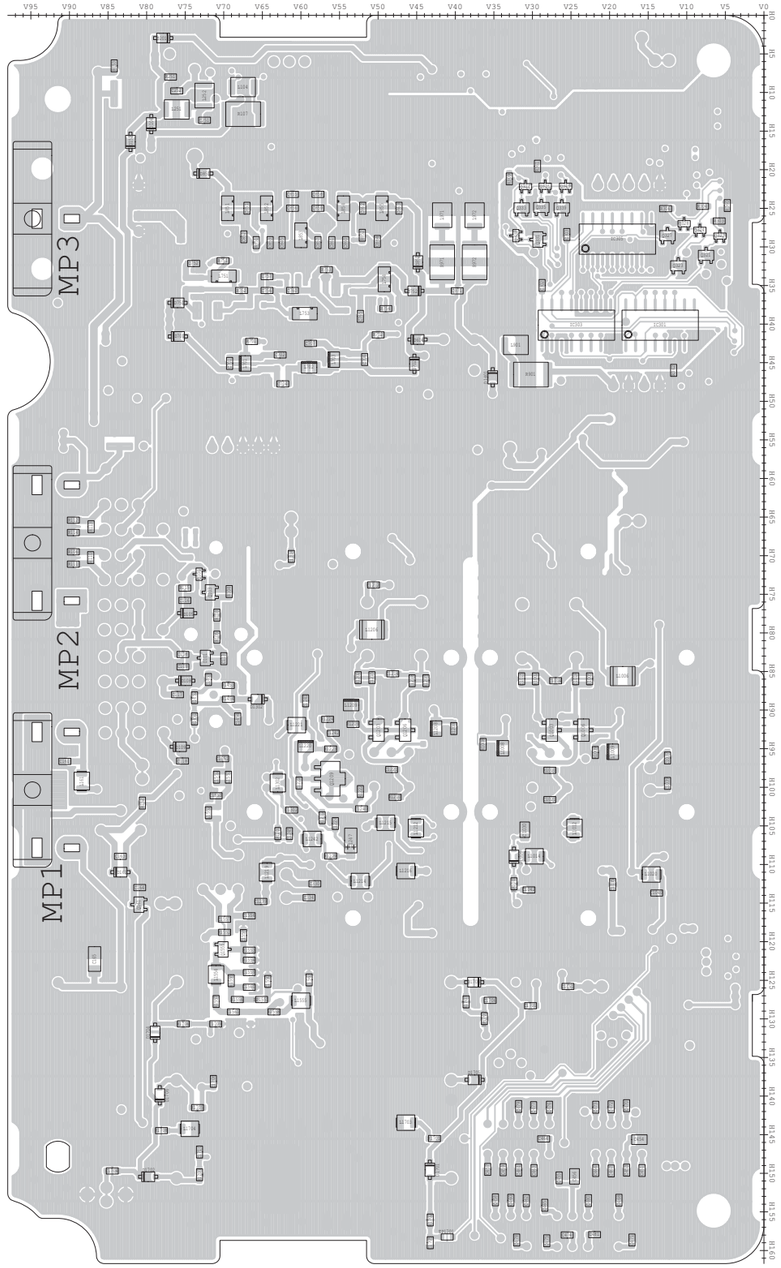

• **MCF-M BOARD (BOTTOM VIEW)**

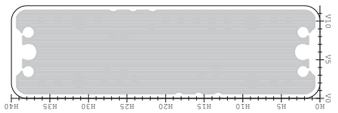

• **MCF-N BOARD (BOTTOM VIEW)**

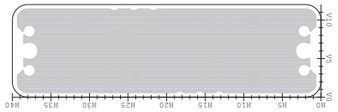

• **MCF-W BOARD (BOTTOM VIEW)**

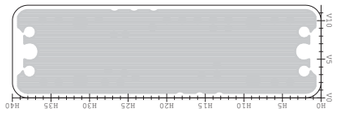

• **JACK BOARD (BOTTOM VIEW)**

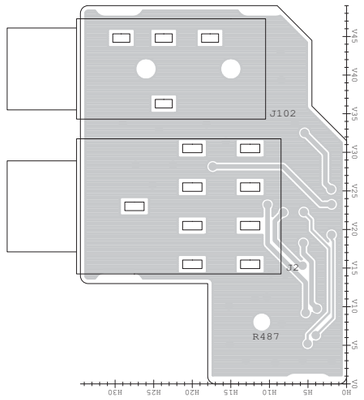

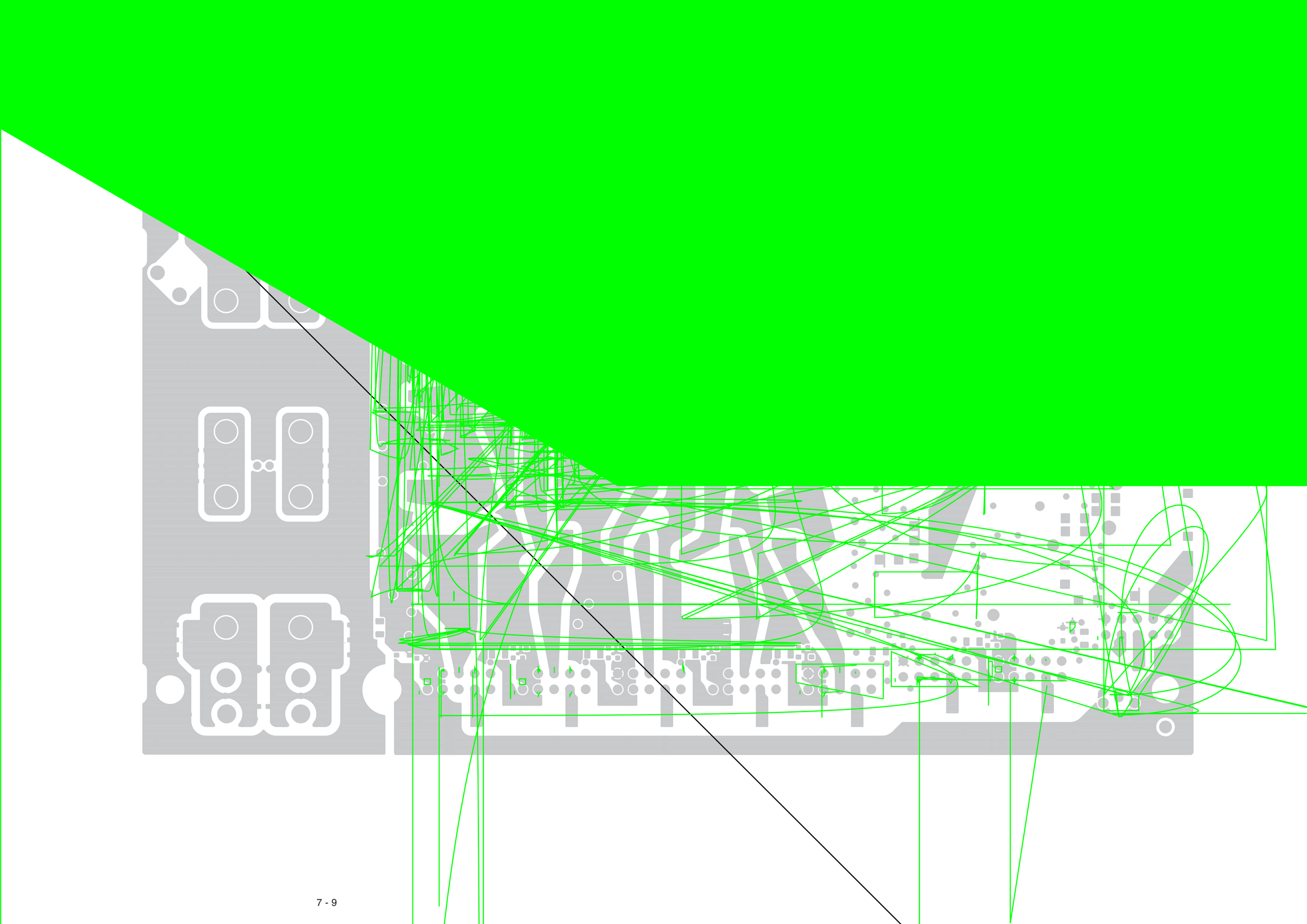

The combination of top side and bottom side of this page shows the actual configuration of P.C. board.

• FILTER UNIT (BOTTOM VIEW)

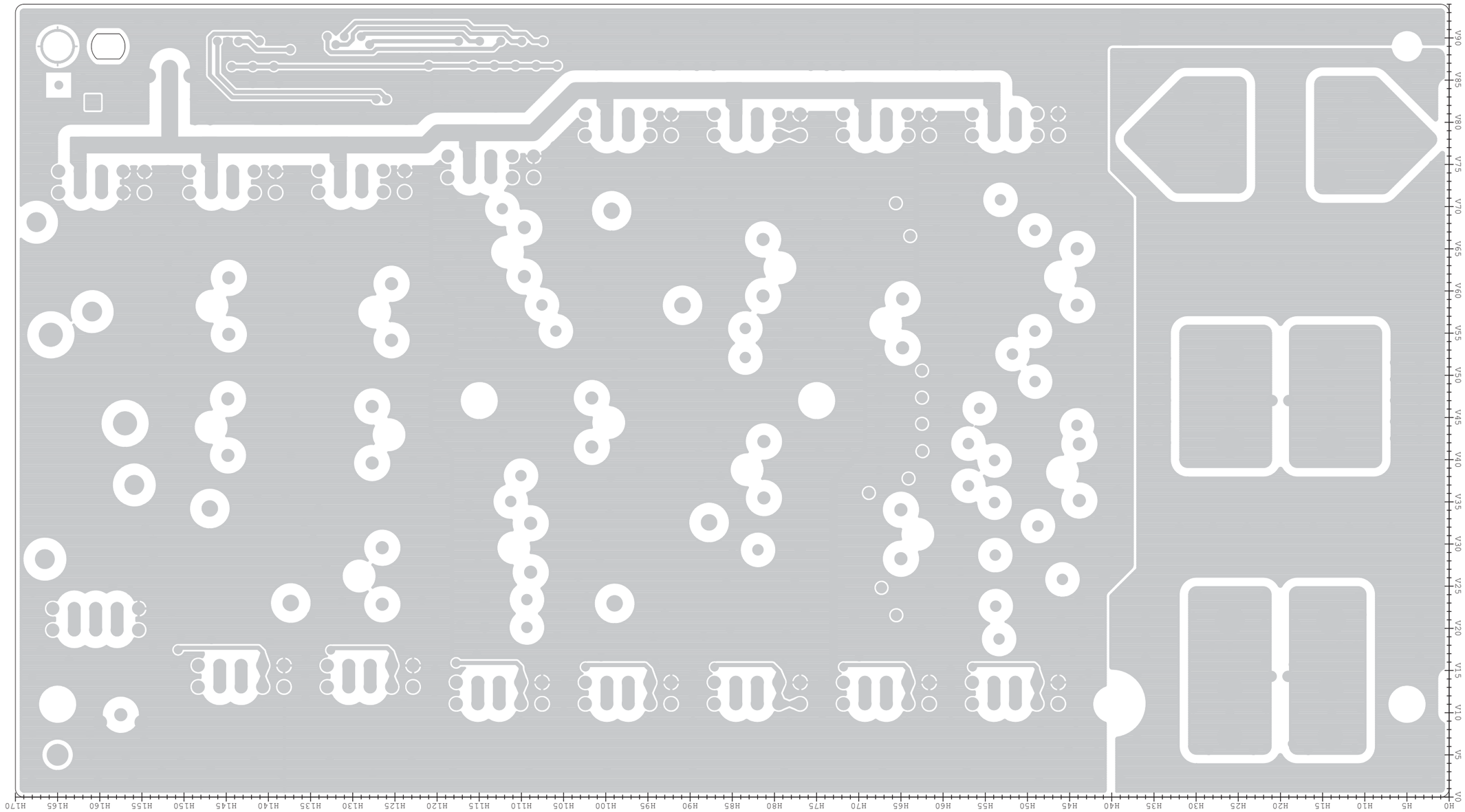

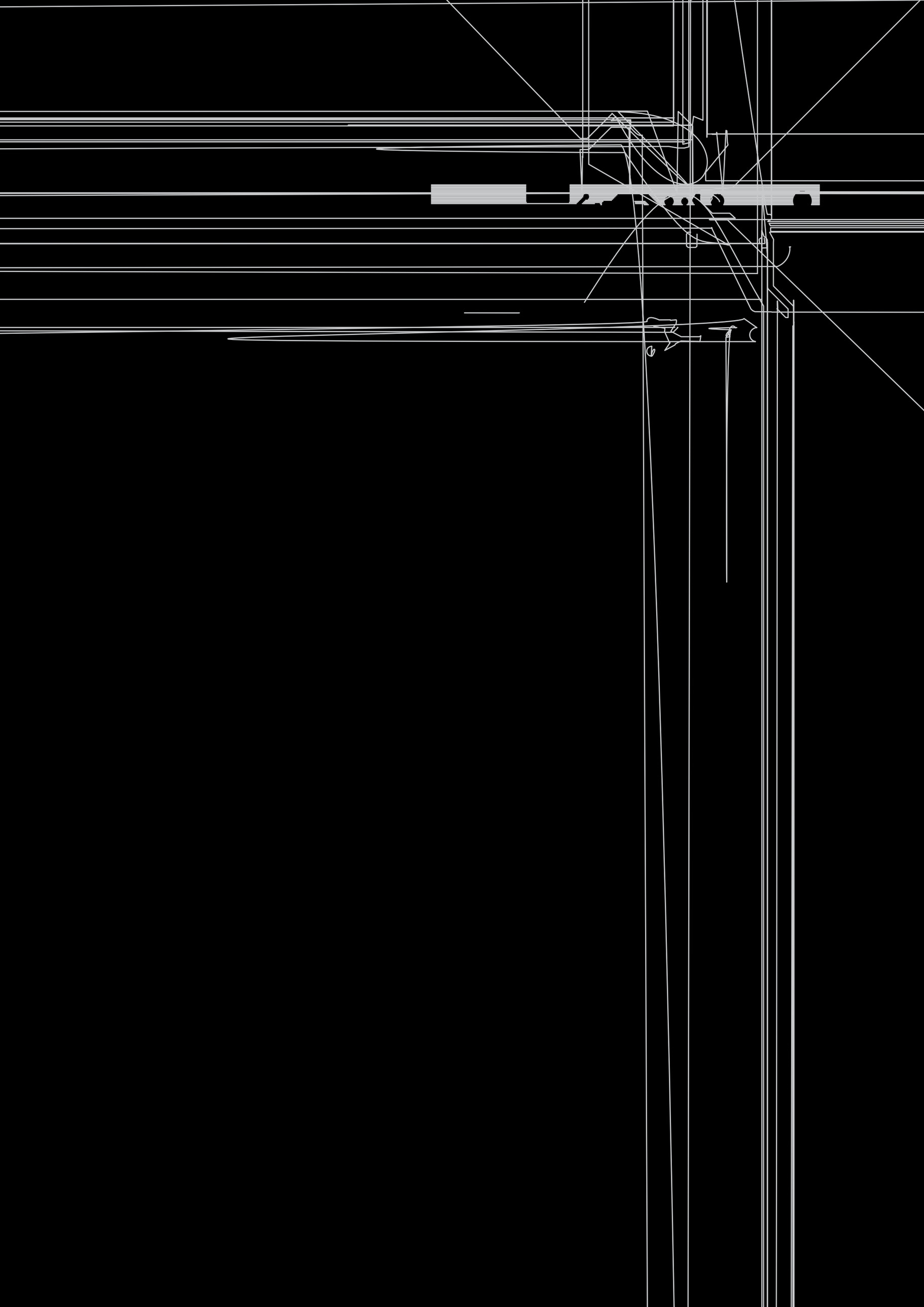

• **TUNER UNIT**
(BOTTOM VIEW)

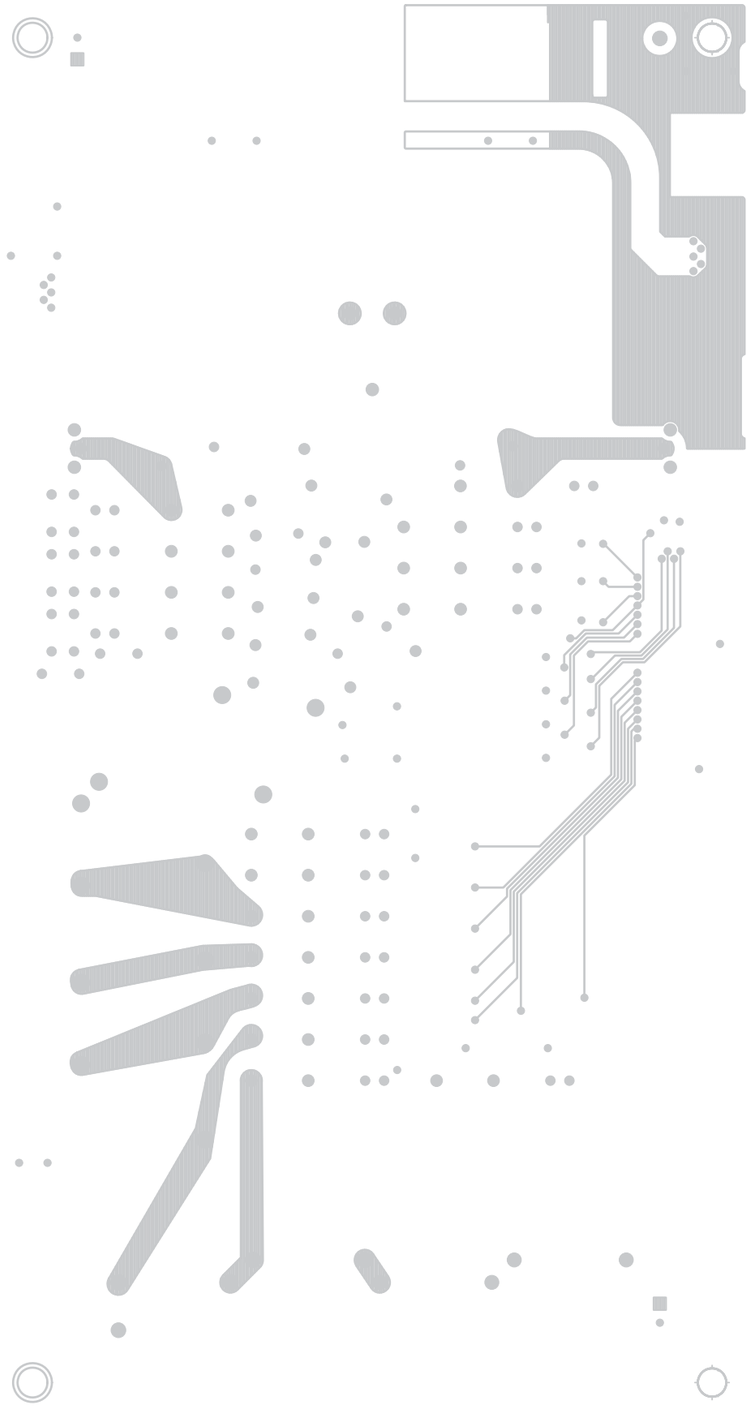

• **CTRL UNIT**
(BOTTOM VIEW)

The combination of this side and the bottom side shows the board layout in the same configuration as the actual P.C.Board.

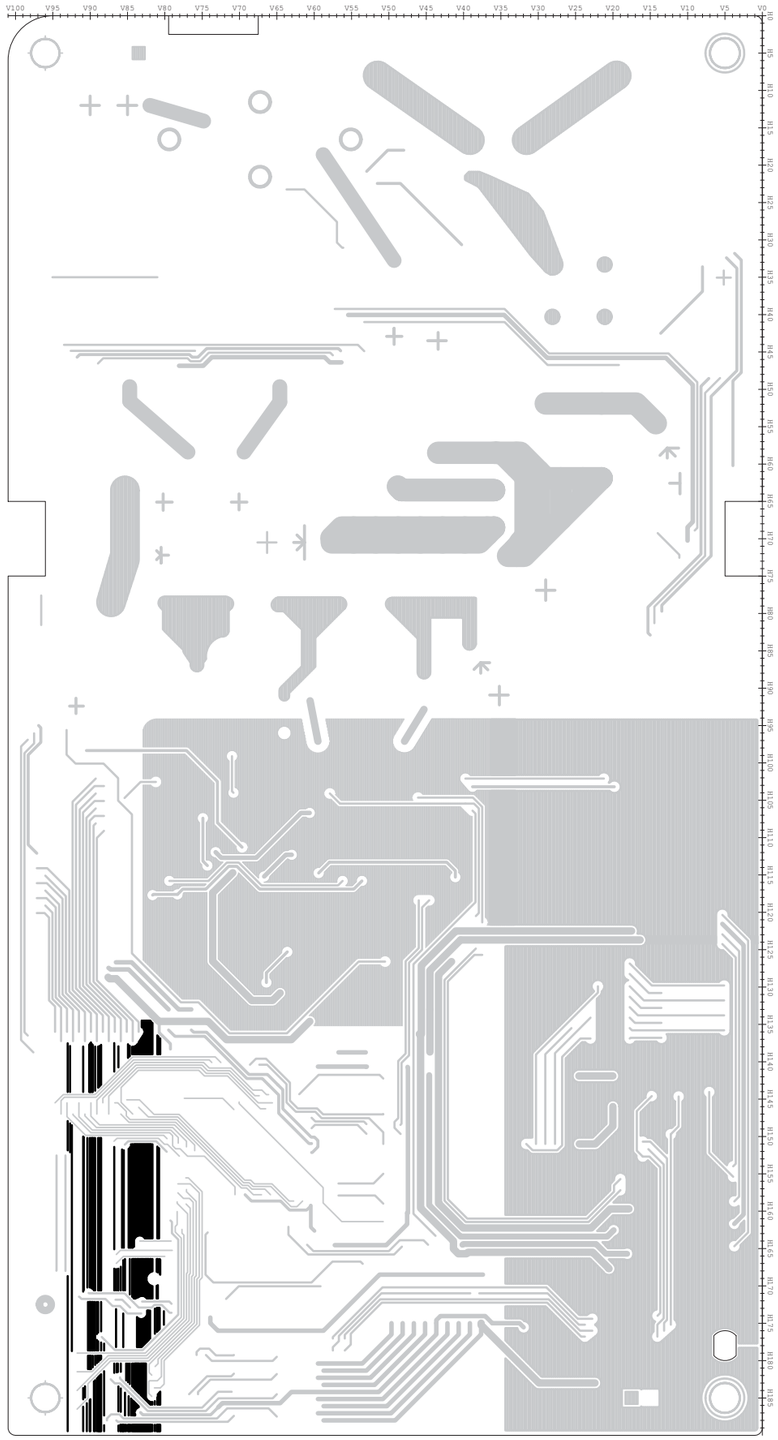

The combination of this side and the bottom side shows the board layout in the same configuration as the actual P.C.Board.

• DISPLAY UNIT (TOP VIEW)

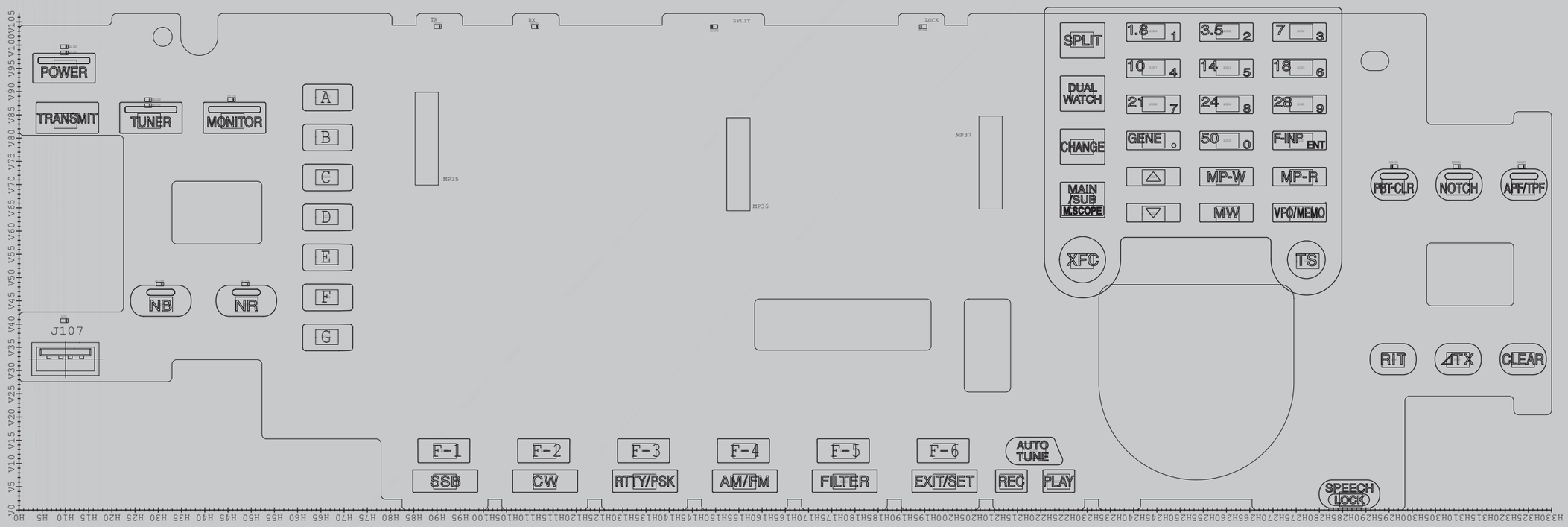

• MIC BOARD (TOP VIEW)

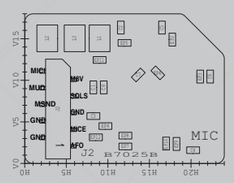

The combination of this side and the bottom side shows the board layout in the same configuration as the actual P.C.Board.

• DISPLAY UNIT (BOTTOM VIEW)

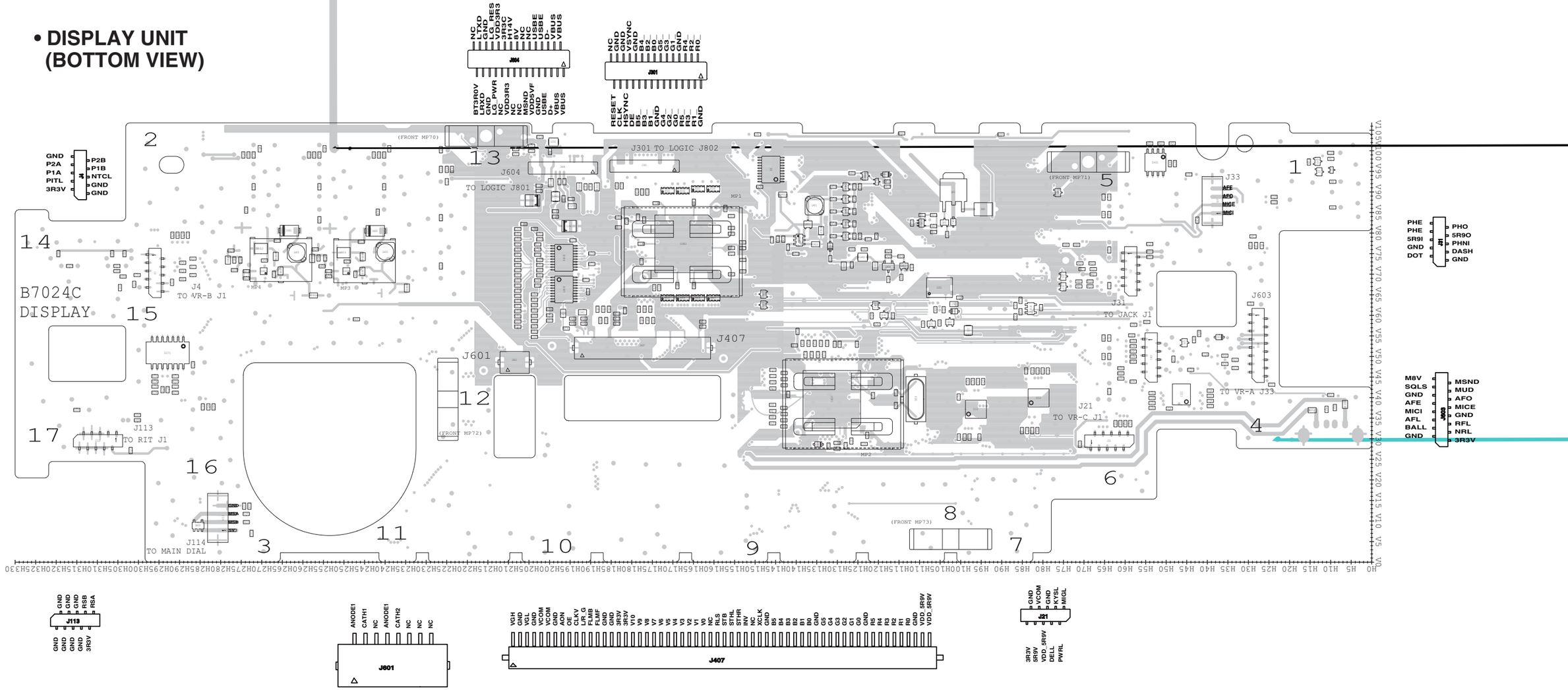

• MIC BOARD (BOTTOM VIEW)

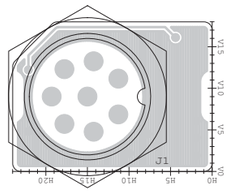

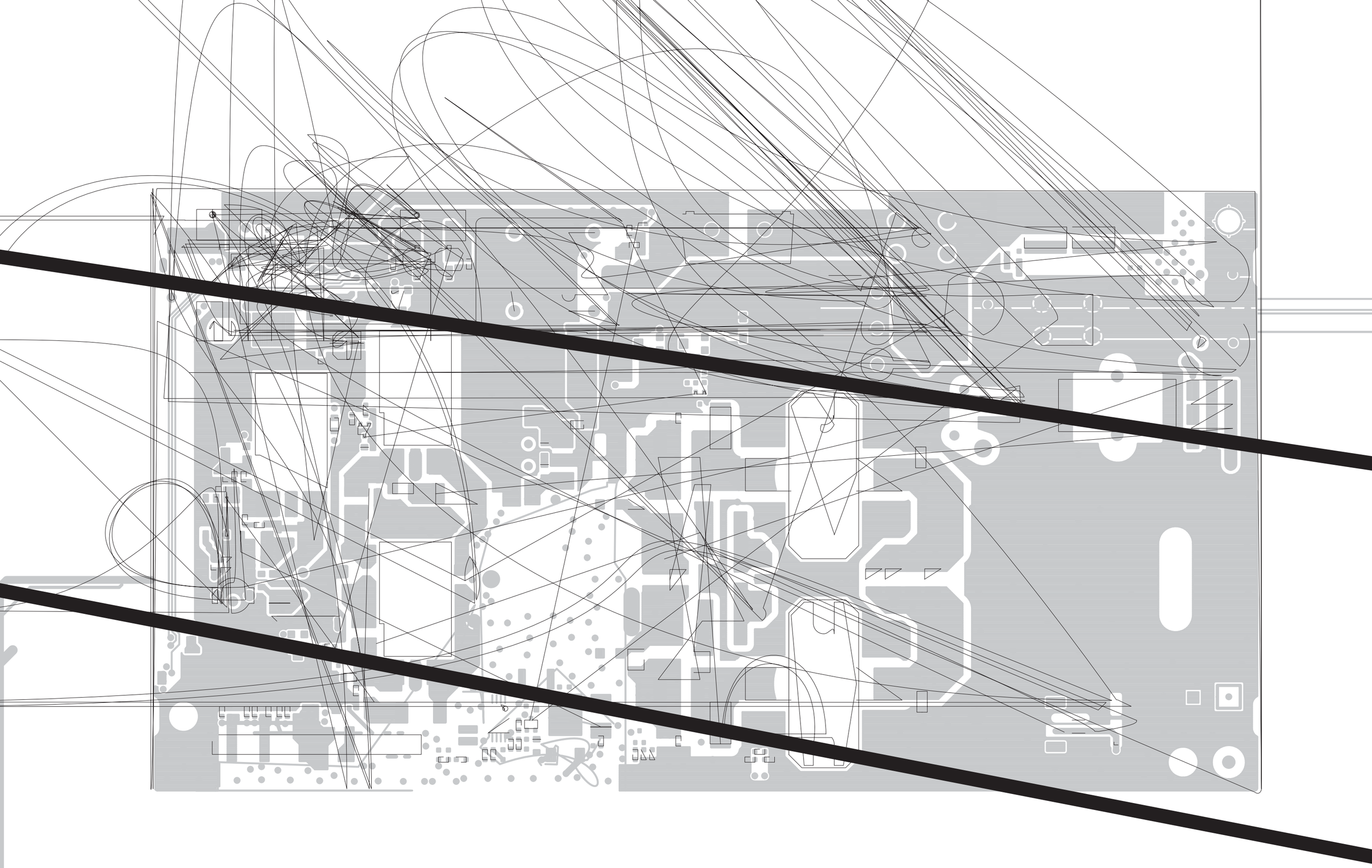

The combination of top side and bottom side of this page shows the actual configuration of P.C. board.

• PA UNIT (BOTTOM VIEW)

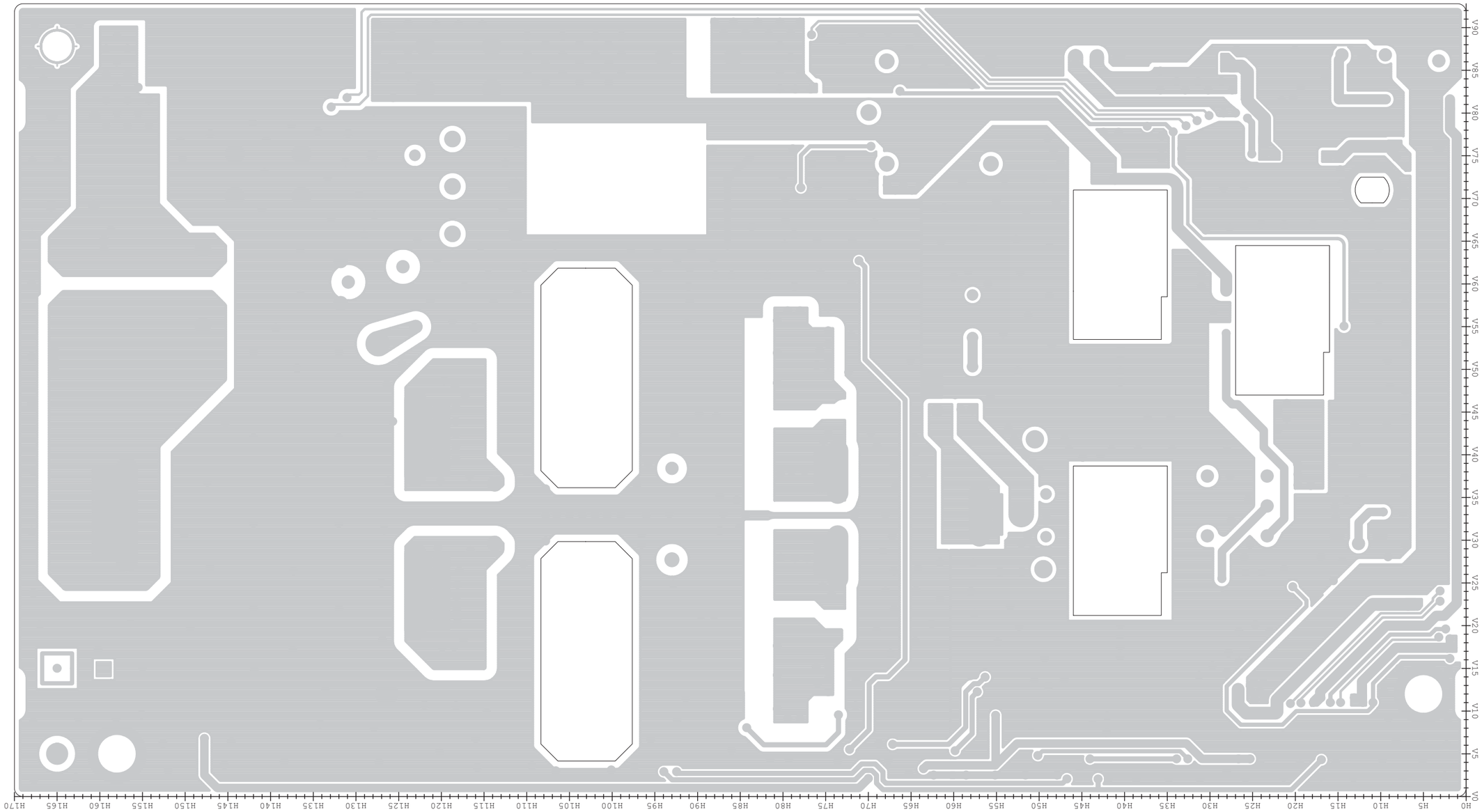

GENERAL WIRING (1/2)

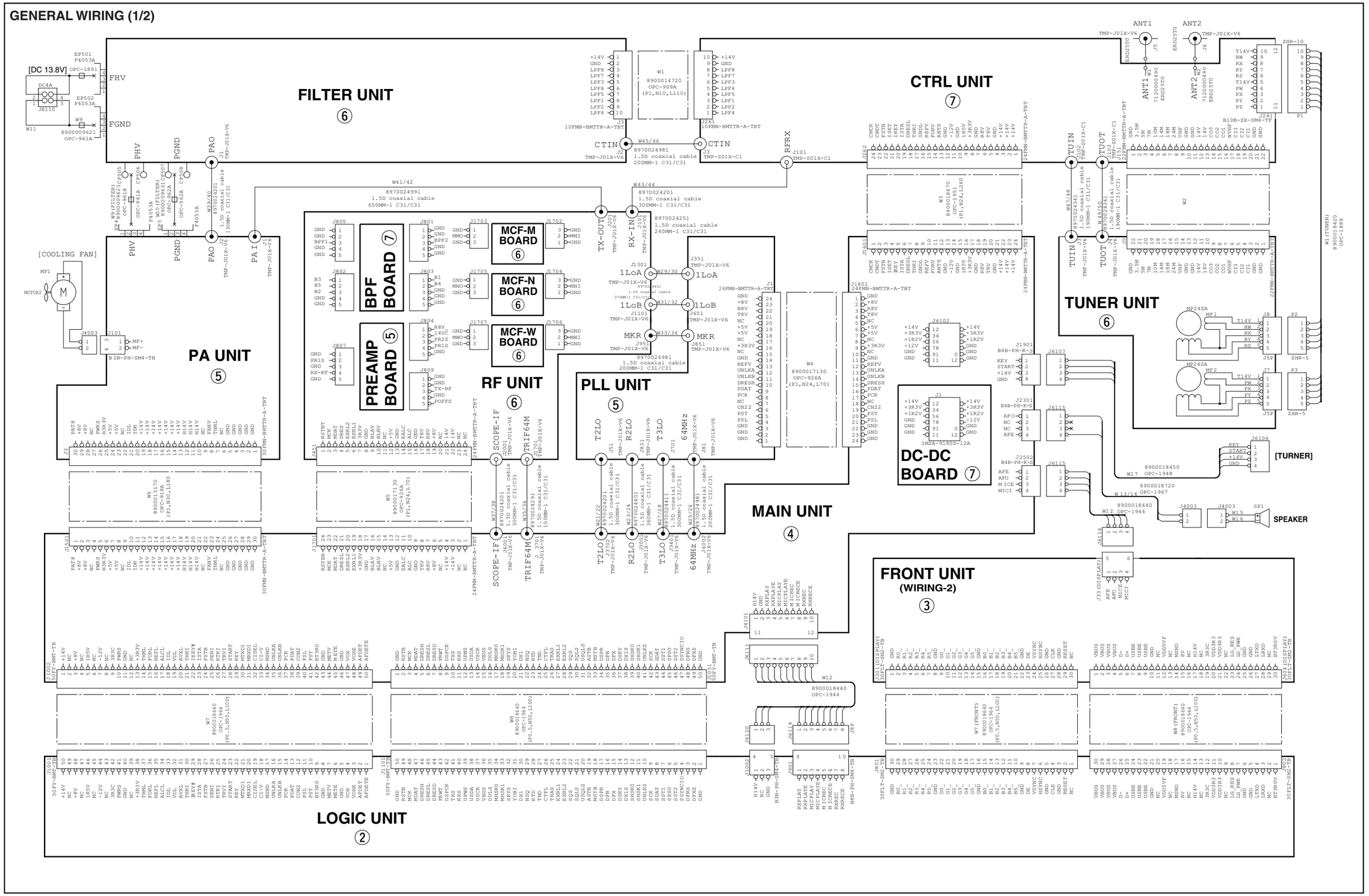

GENERAL WIRING (2/2)

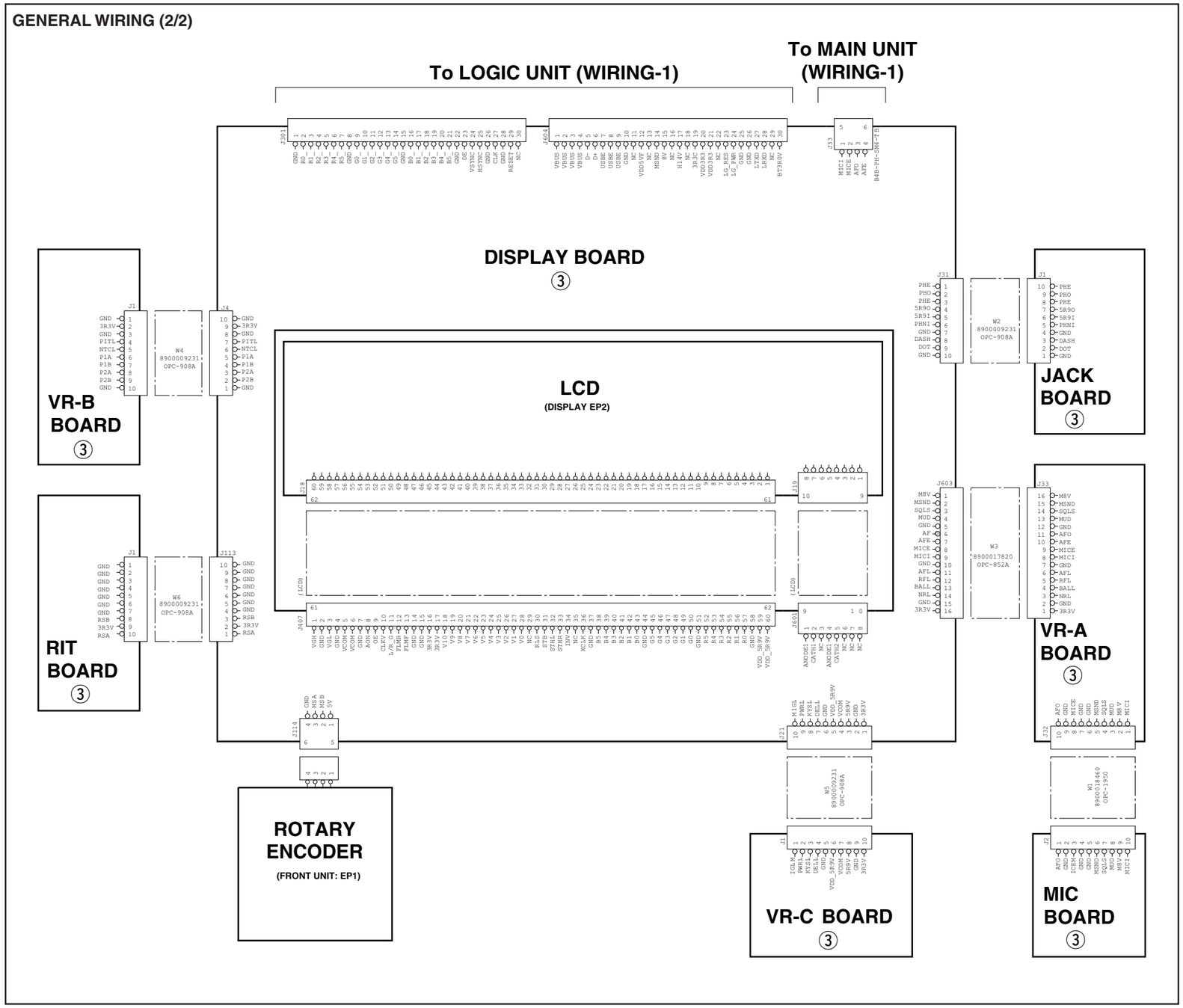

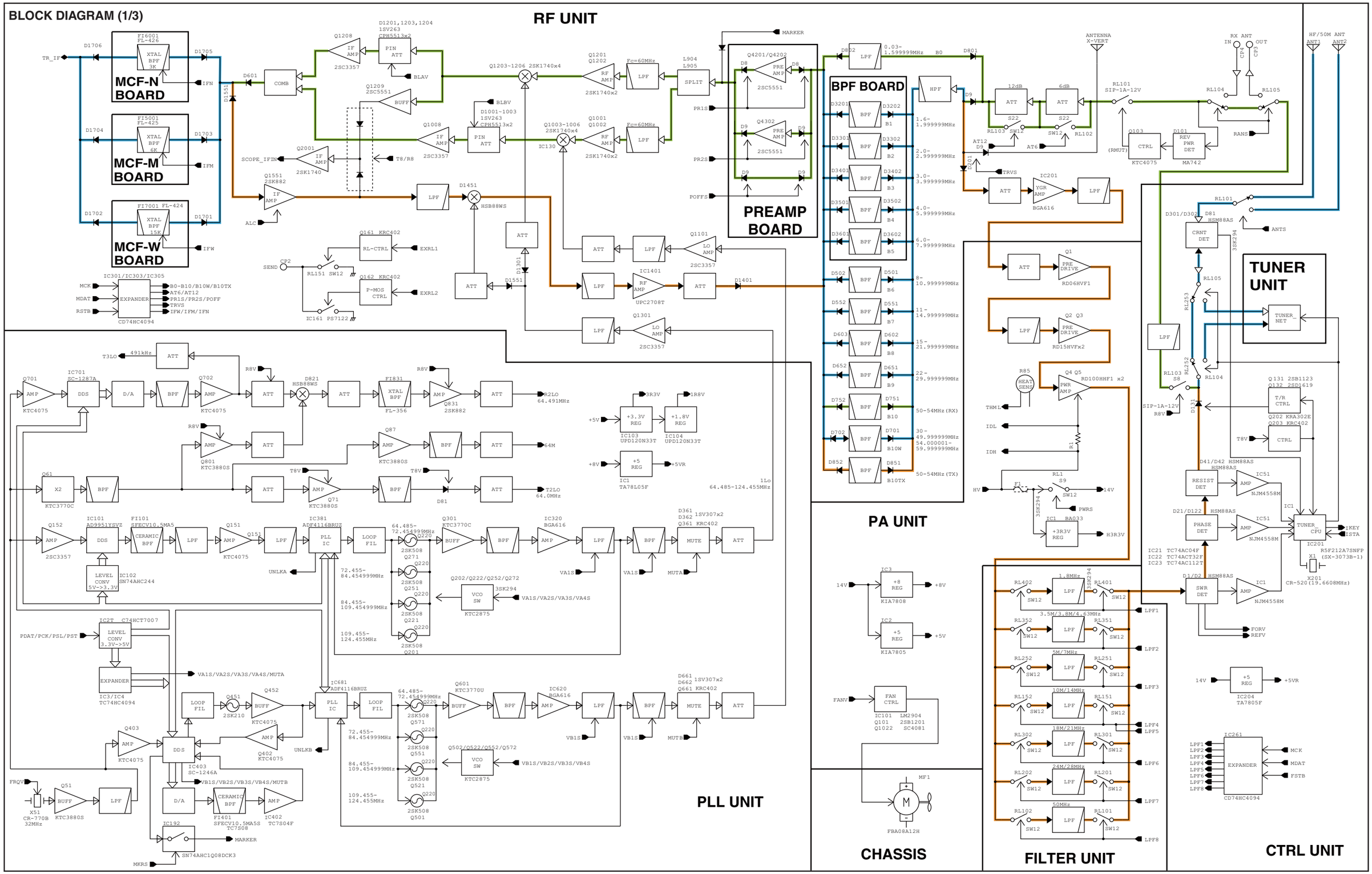
BLOCK DIAGRAM (1/3)
RF UNIT
MCF-N BOARD
MCF-M BOARD
MCF-W BOARD
PREAMP BOARD
BPF BOARD
TUNER UNIT
PA UNIT
CHASSIS
FILTER UNIT
CTRL UNIT
PLL UNIT

BLOCK DIAGRAM (2/3)

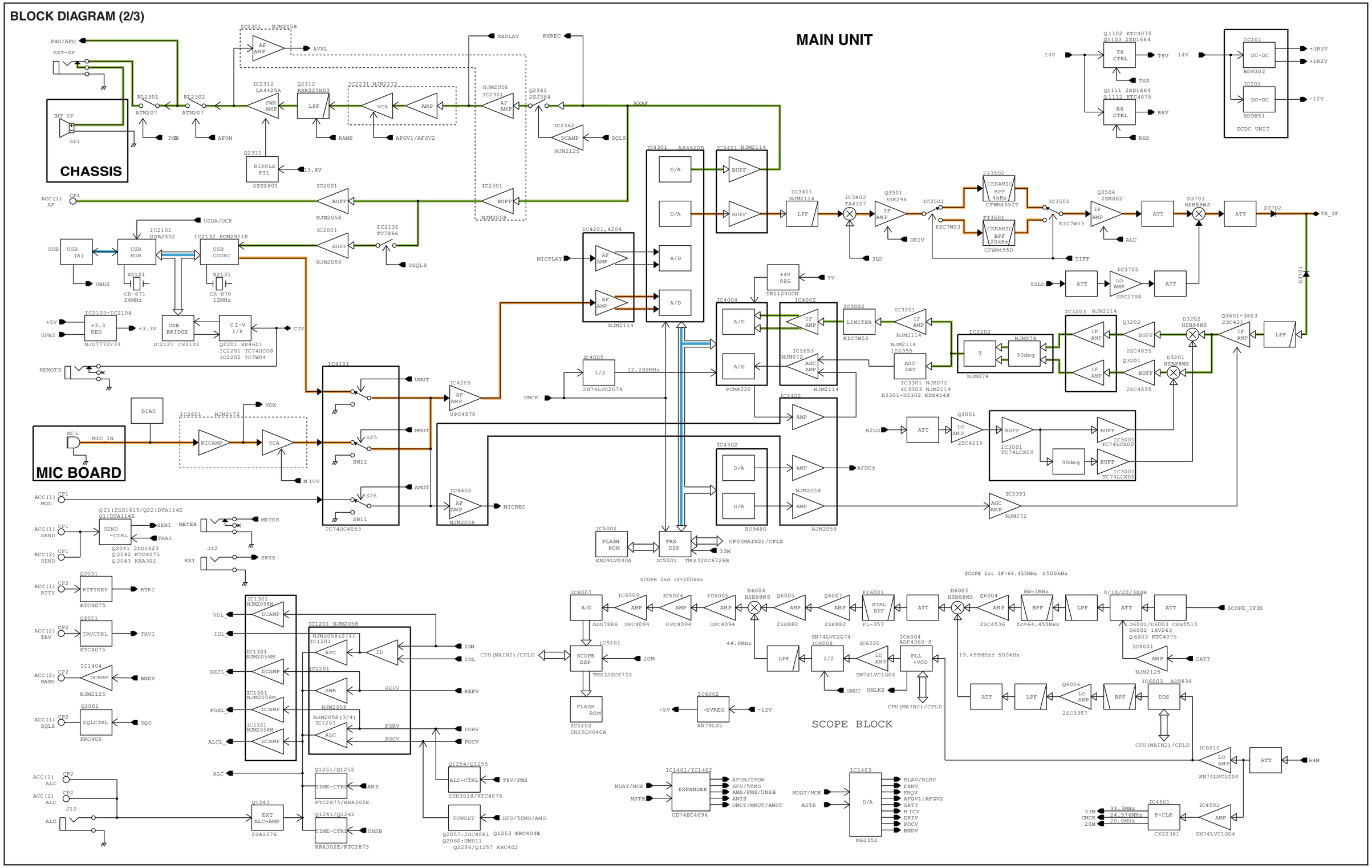

BLOCK DIAGRAM (3/3)

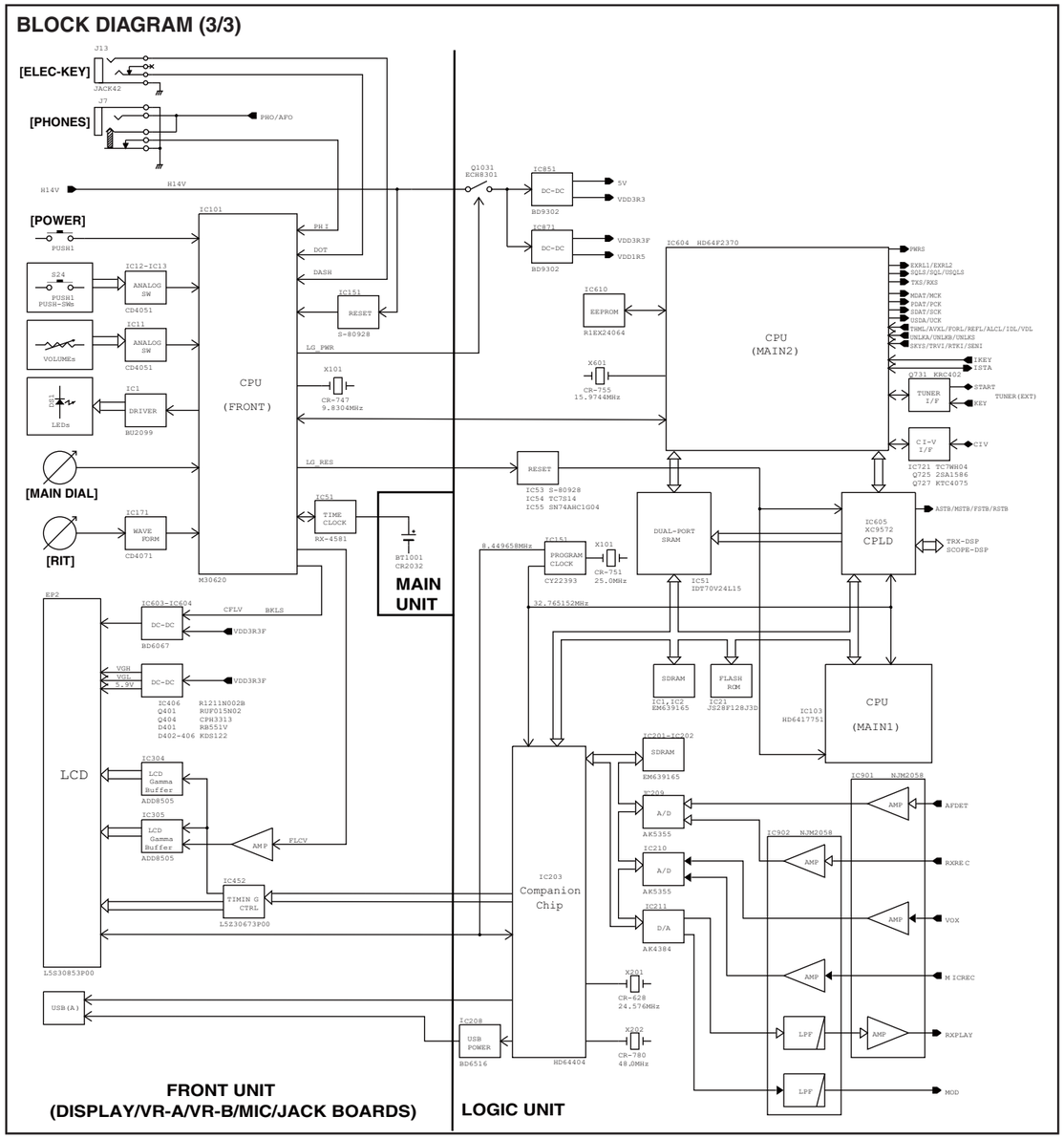

LOGIC UNIT (1/4)

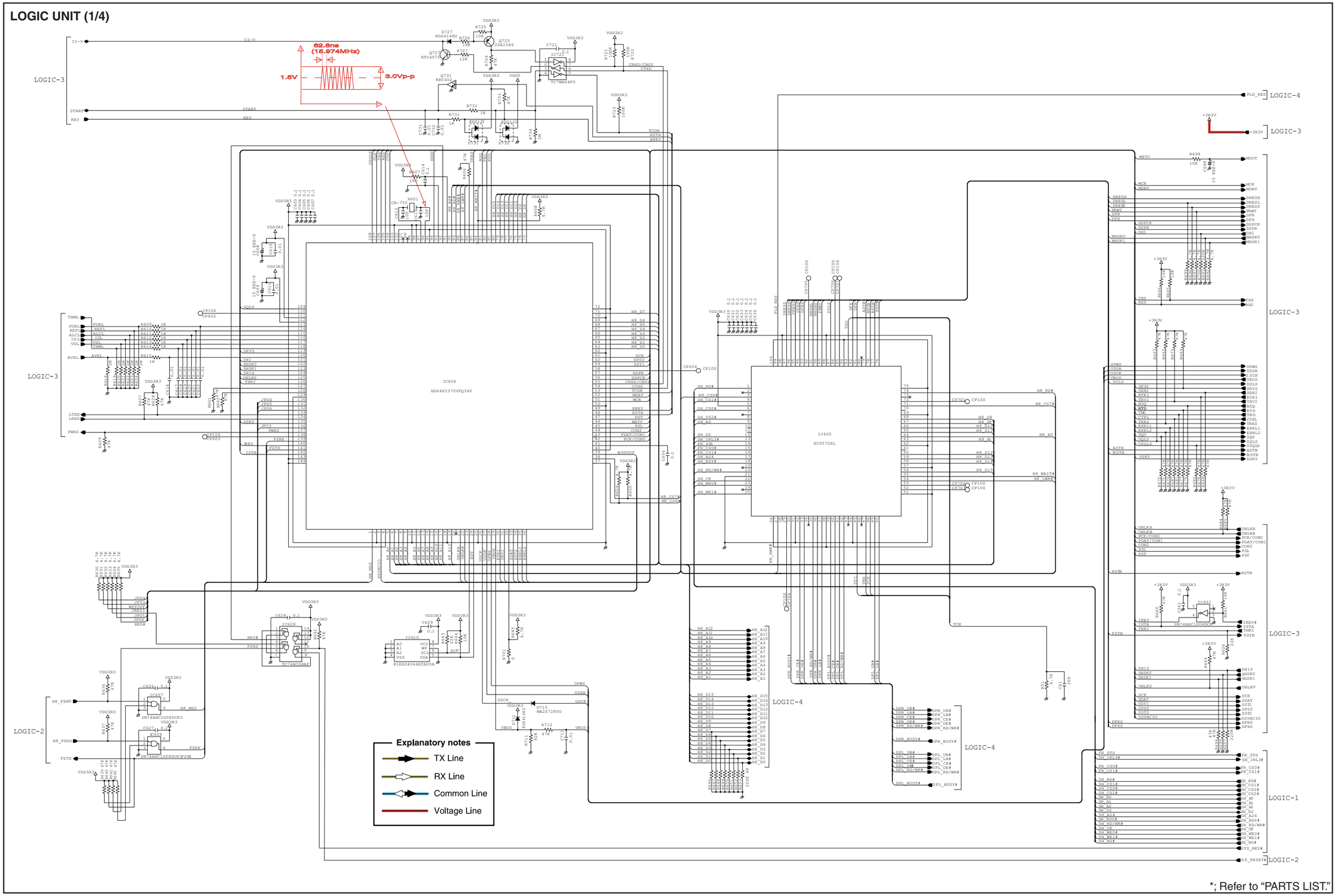

*; Refer to "PARTS LIST."

LOGIC UNIT (3/4)

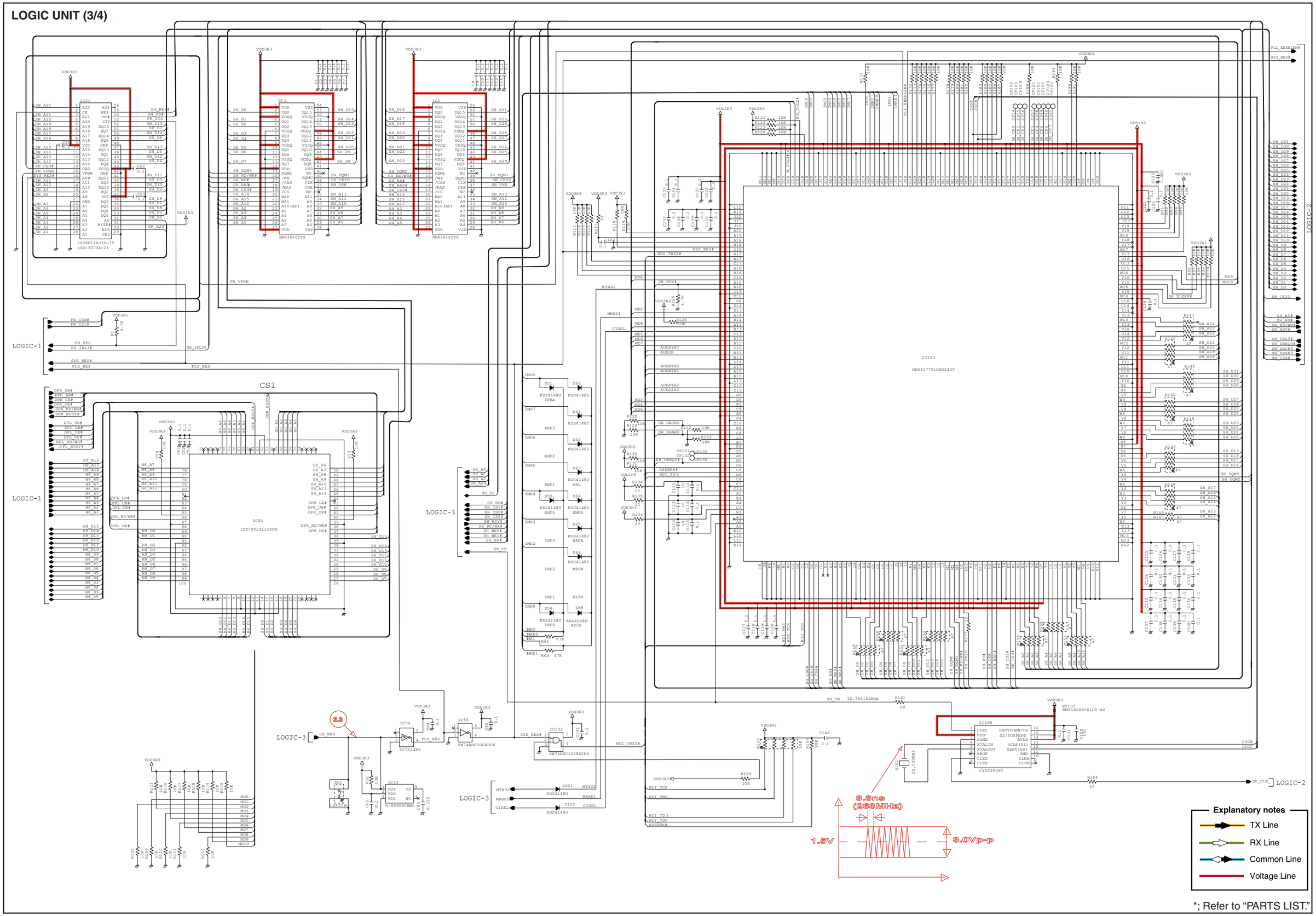

*; Refer to "PARTS LIST."

LOGIC UNIT (4/4)

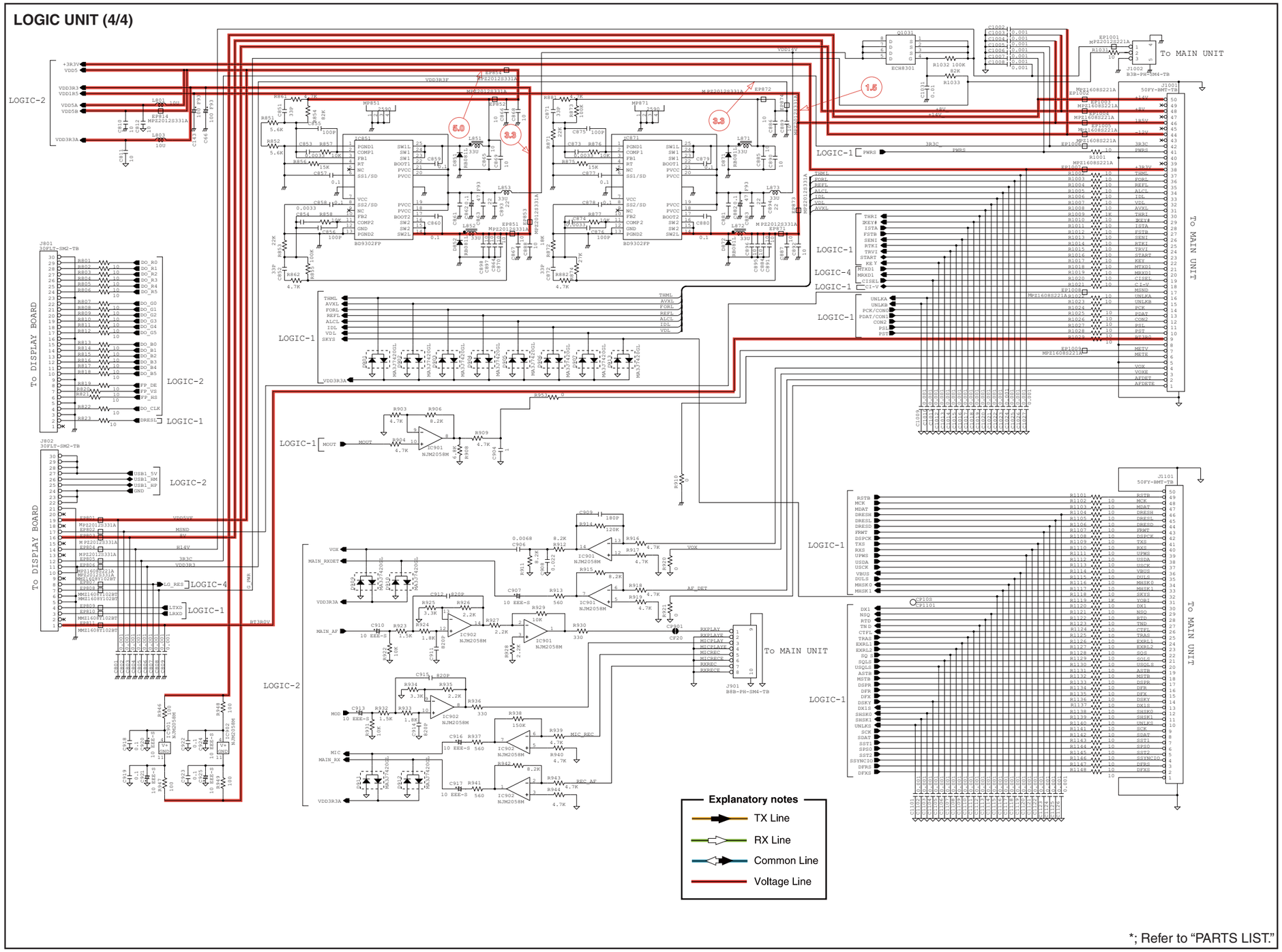

*; Refer to "PARTS LIST."

DISPLAY UNIT (1/5)

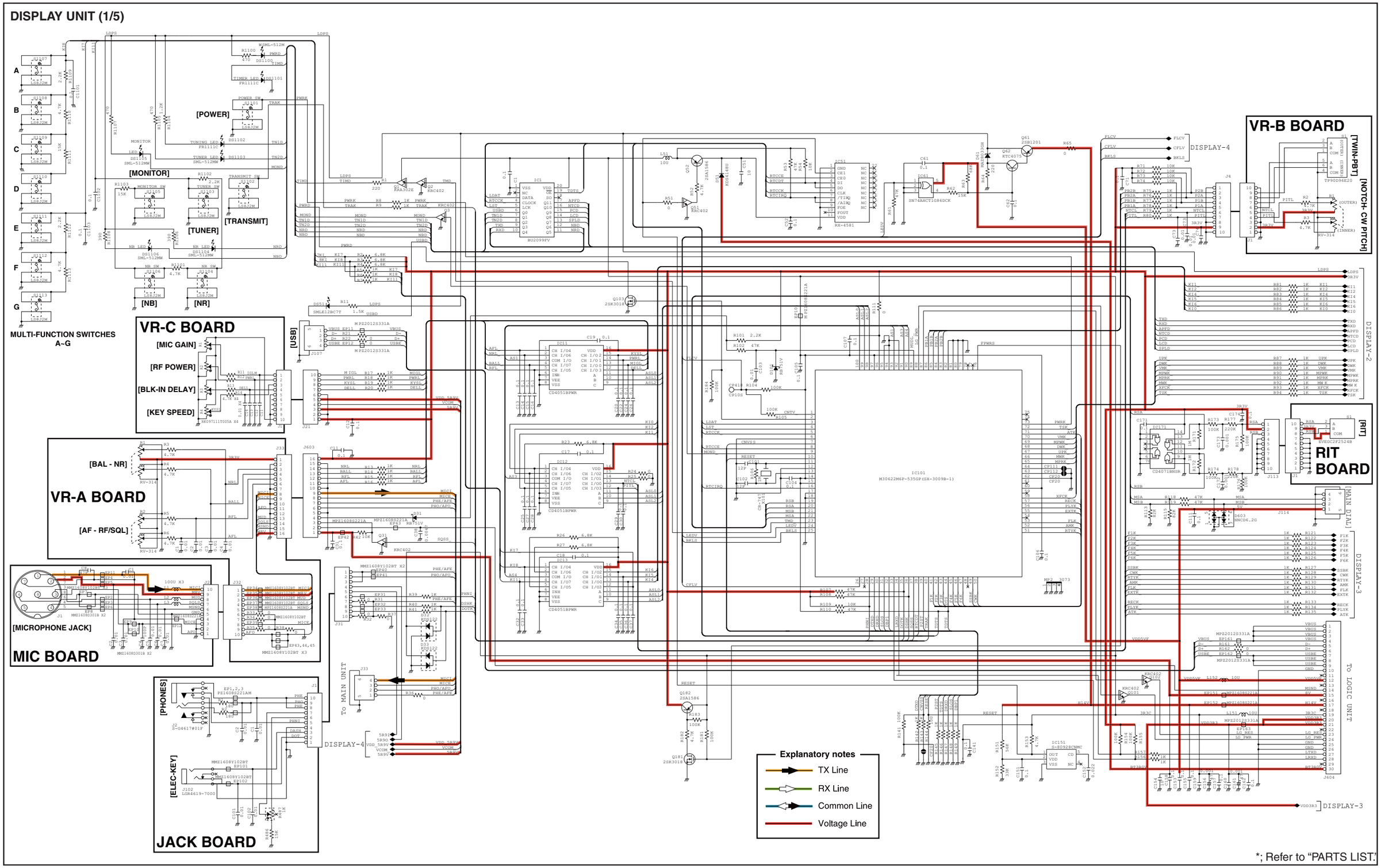

*; Refer to "PARTS LIST."

DISPLAY UNIT (2/5)

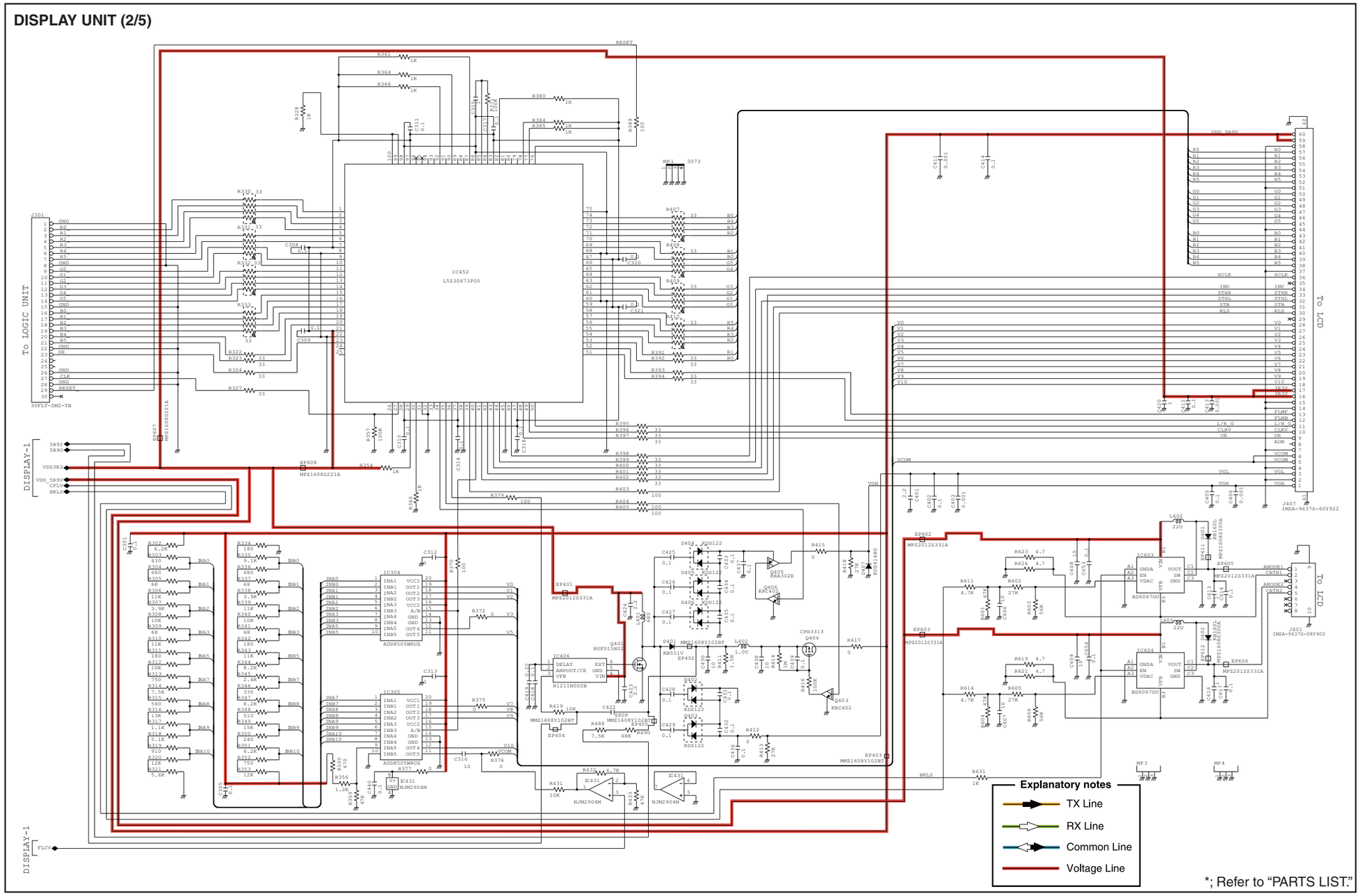

DISPLAY UNIT (1/5)

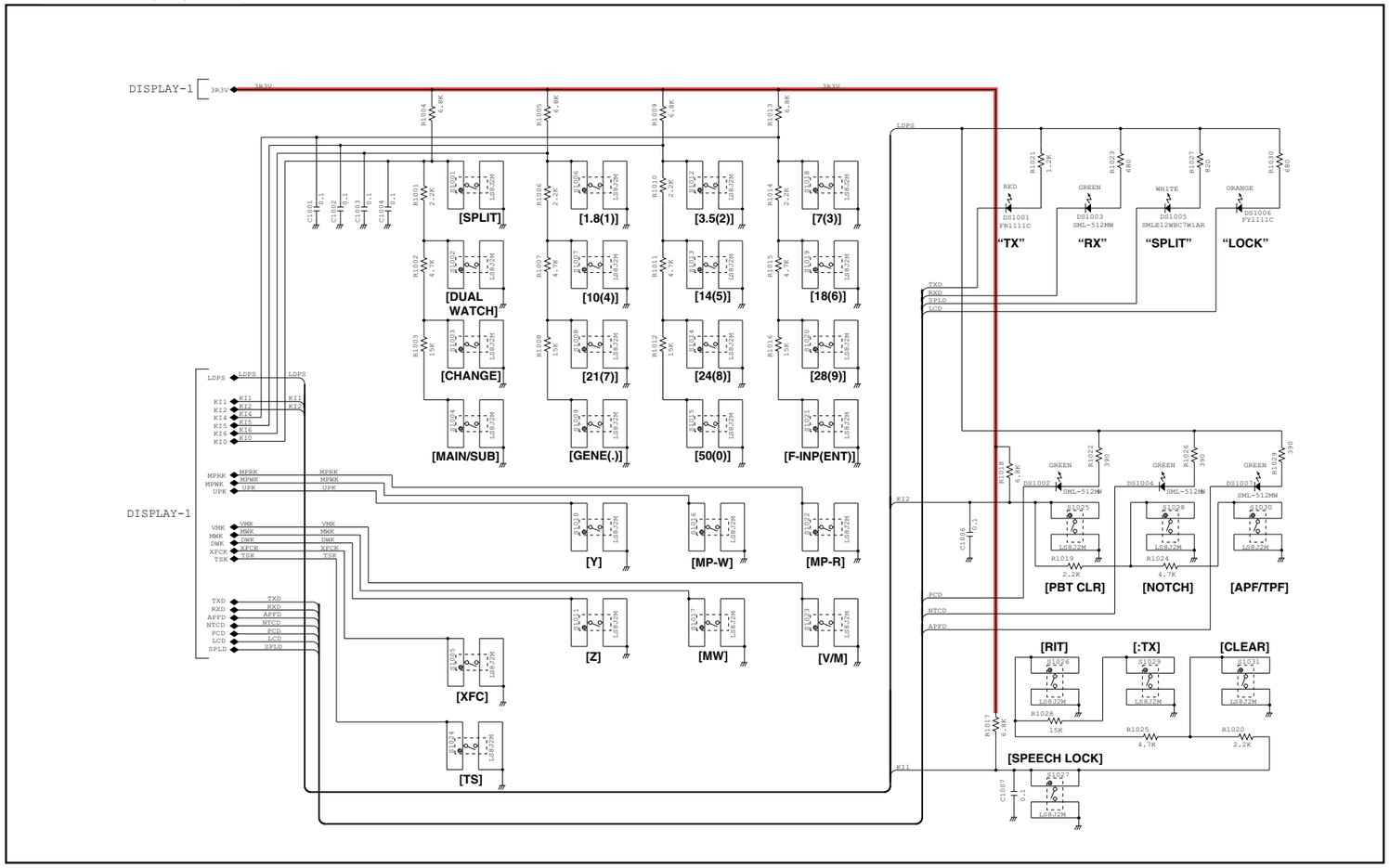

DISPLAY UNIT (4/5)

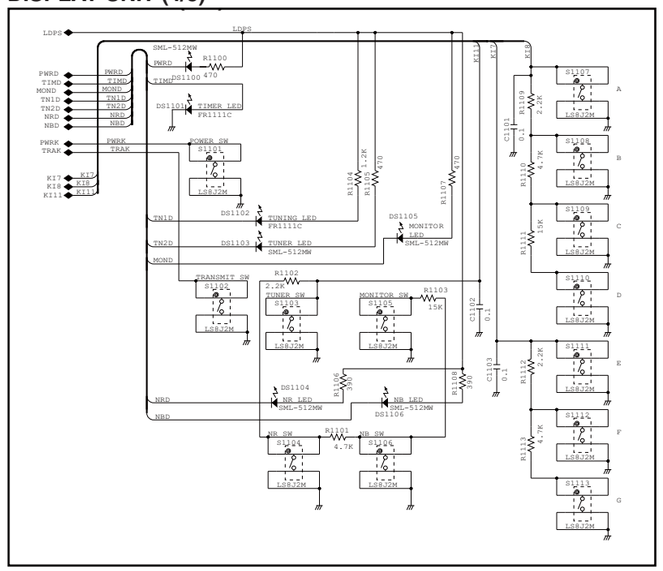

DISPLAY UNIT (5/5)

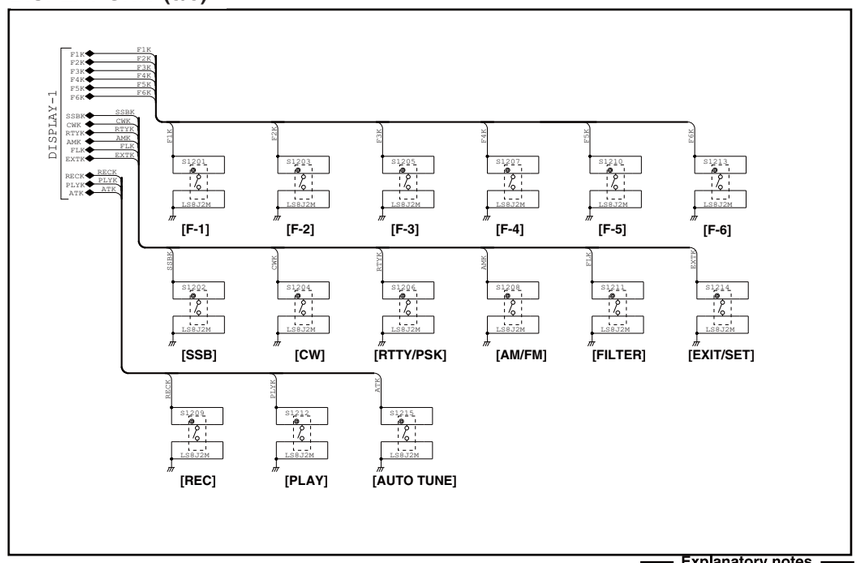

Explanatory notes

- TX Line
- RX Line
- Common Line
- Voltage Line

*; Refer to "PARTS LIST."

MAIN UNIT (1/6)

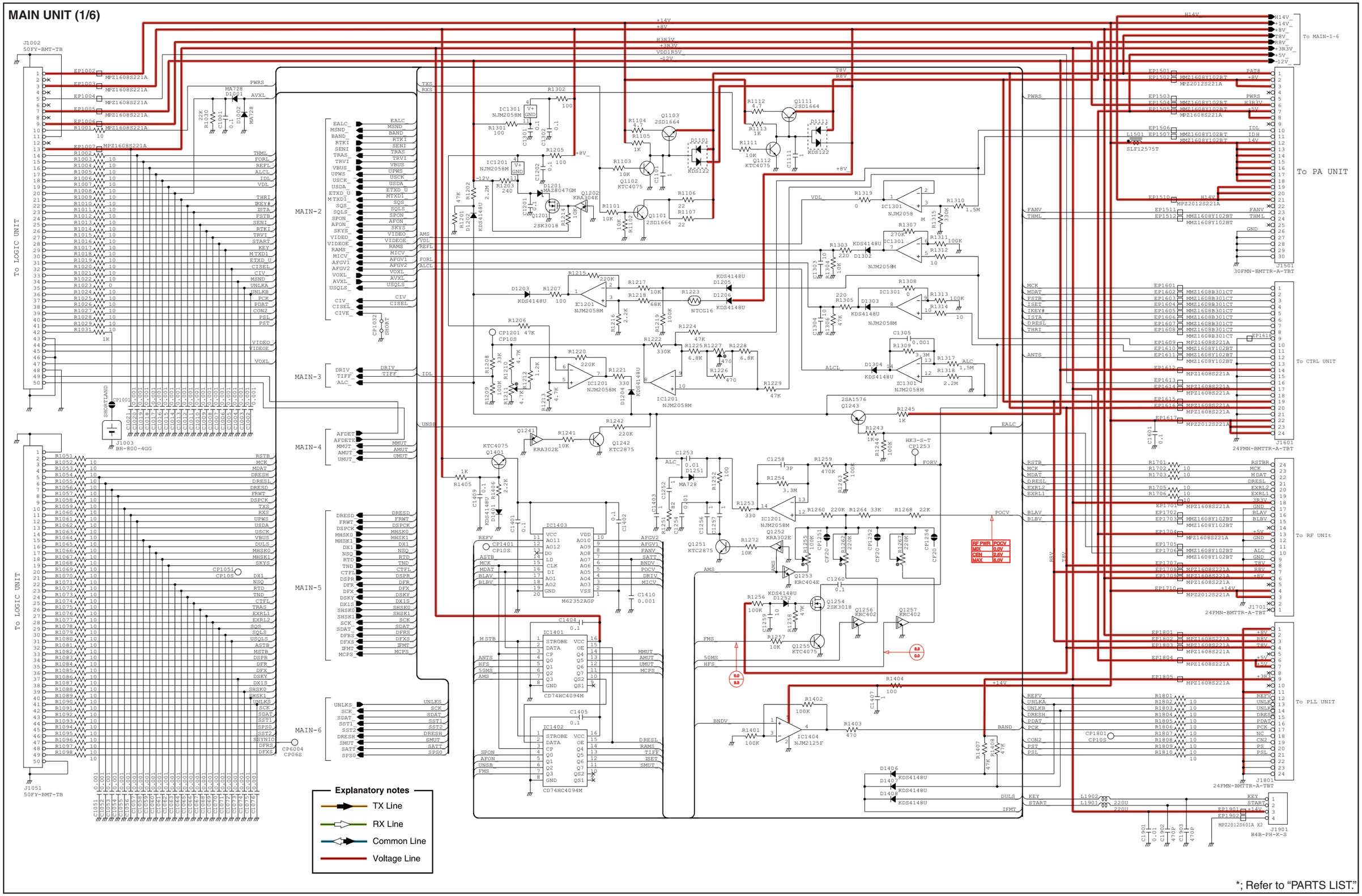

*; Refer to "PARTS LIST."

MAIN UNIT (2/6)

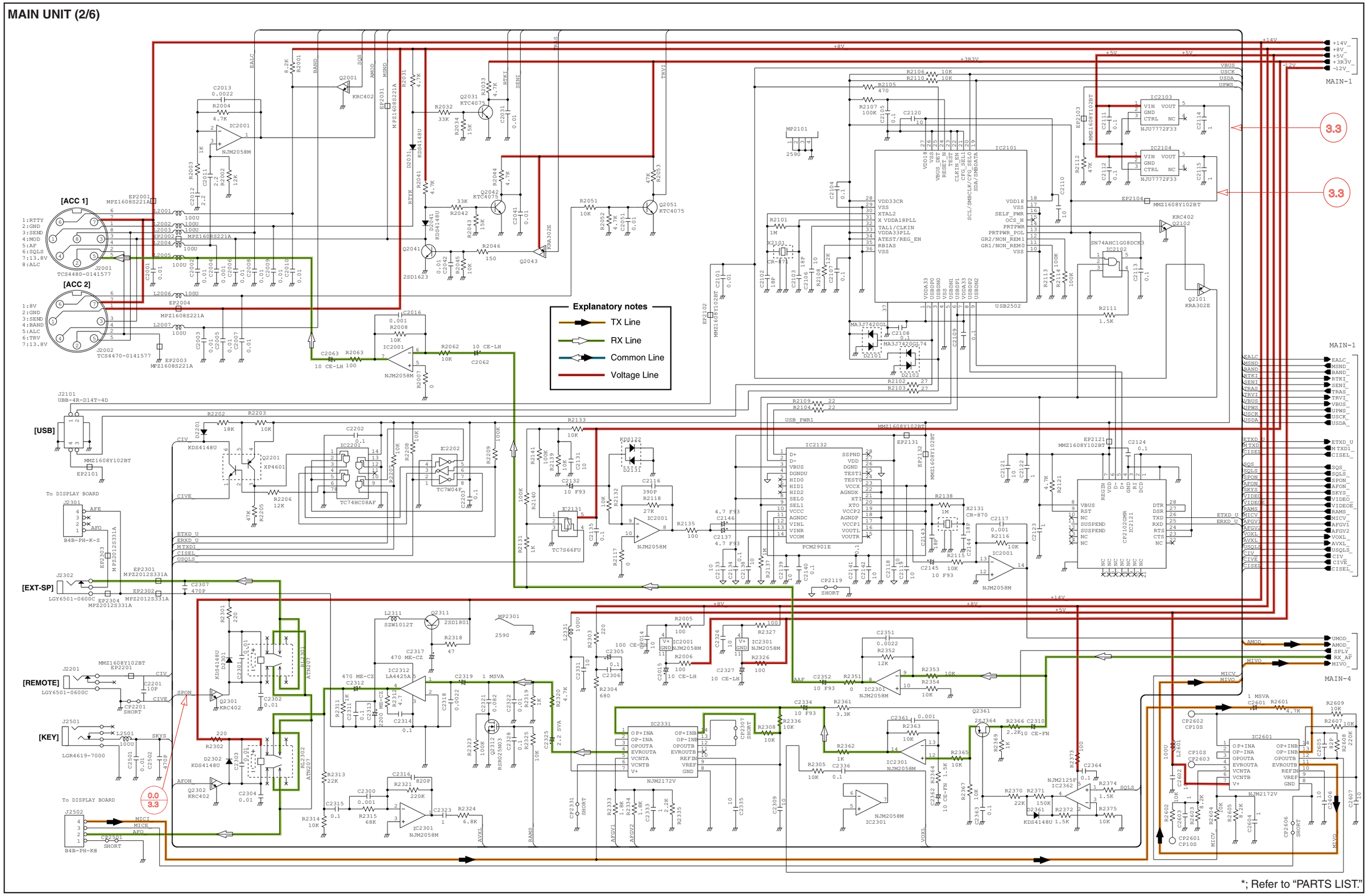
[ACC 1]
[ACC 2]
[USB]
[EXT-SP]
[REMOTE]
[KEY]
Explanatory notes
TX Line
RX Line
Common Line
Voltage Line
MAIN-1
MAIN-4
3.3
0.0
*; Refer to "PARTS LIST."

MAIN UNIT (3/6)

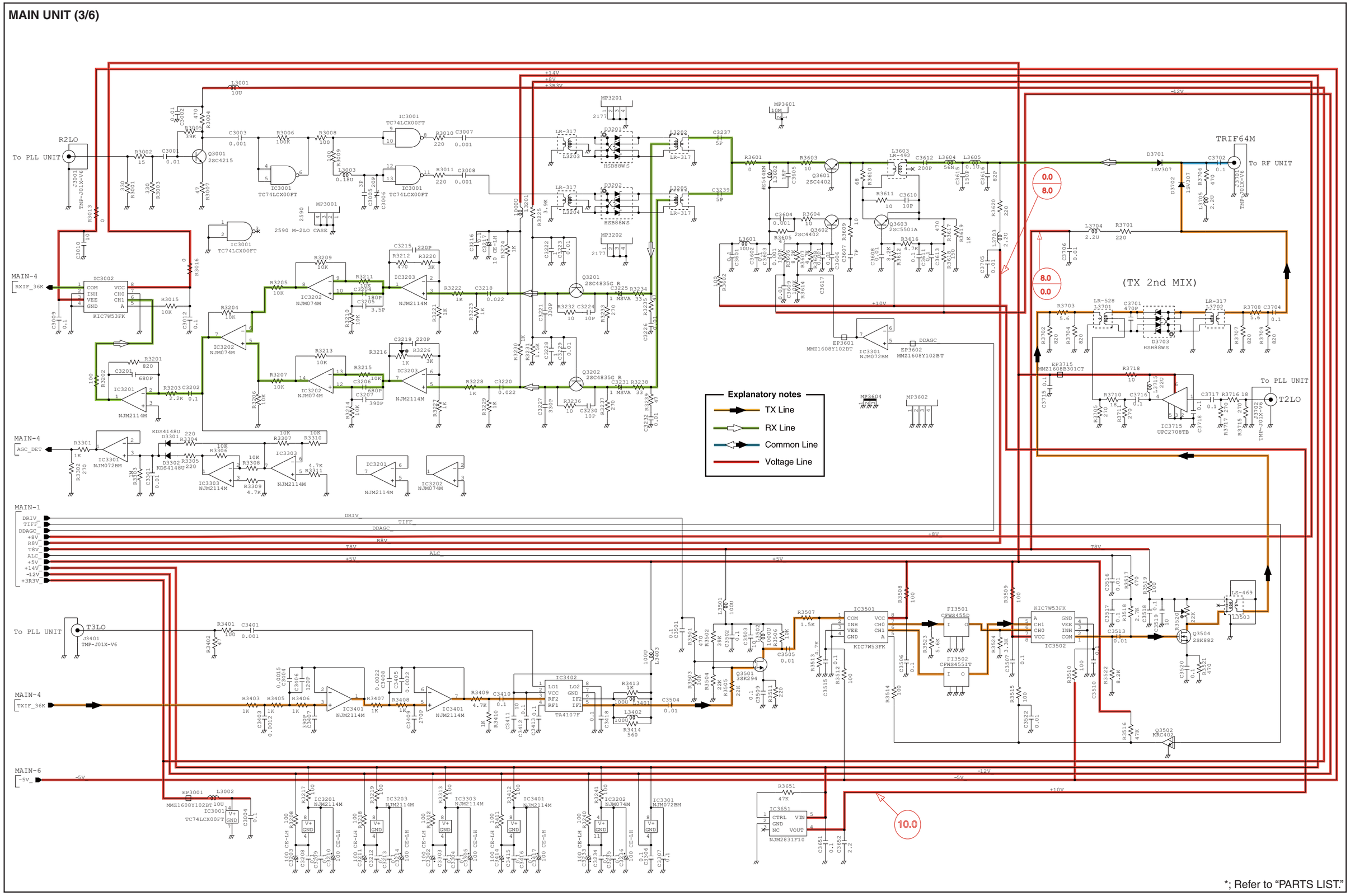

*; Refer to "PARTS LIST."

MAIN UNIT (4/6)

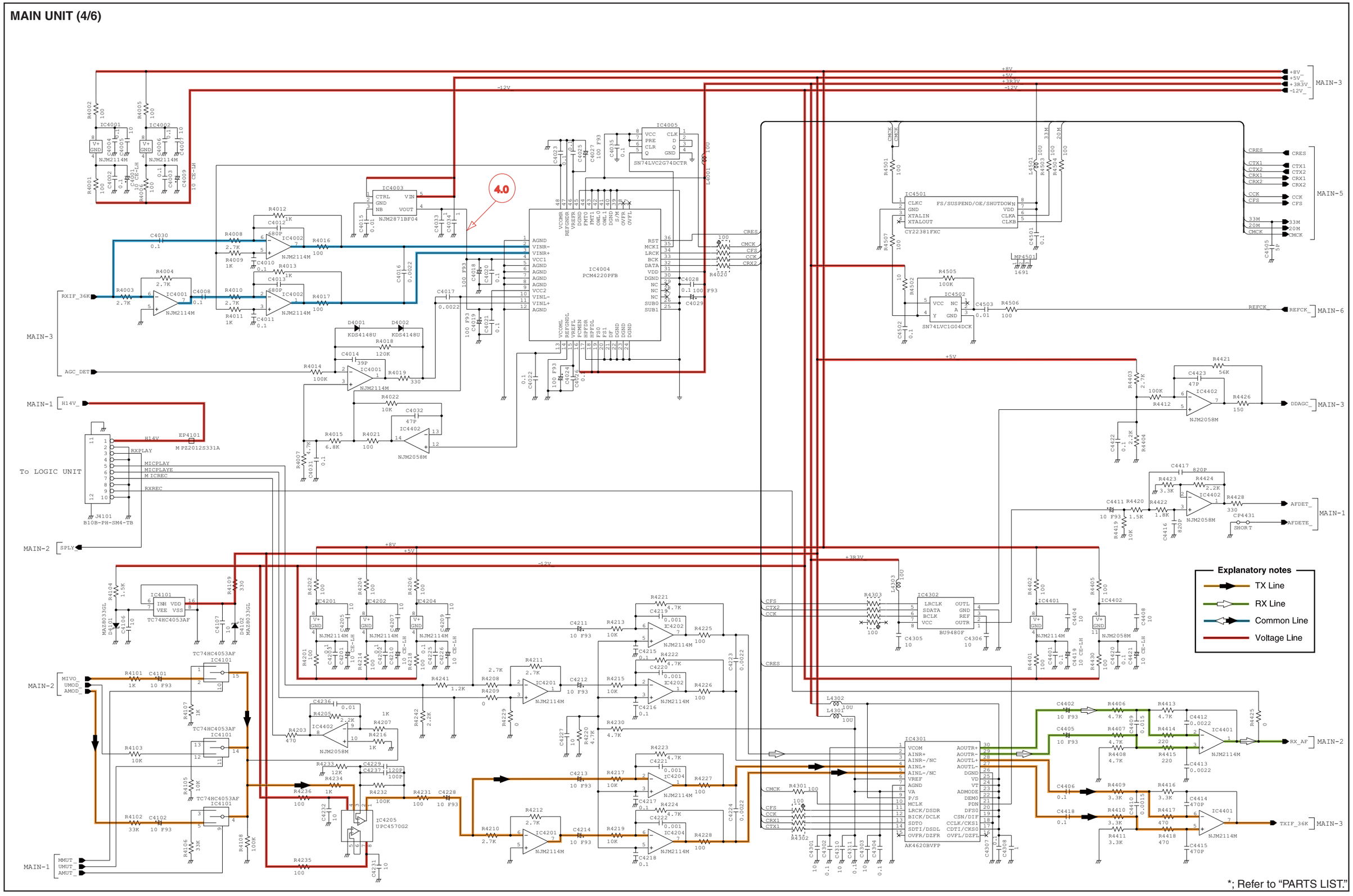
4.0
IC4001 NJM2114M
IC4002 NJM2114M
IC4003 NJM2871BF04
IC4004 PCM4220PFB
IC4005 SN74LVC2G74DCTR
IC4101 TC74HC4053AF
IC4201 NJM2114M
IC4202 NJM2114M
IC4204 NJM2114M
IC4301 AK4620BVFP
IC4302 BU9480F
IC4401 NJM2114M
IC4402 NJM2058M
IC4501 CY22381FXC
IC4502 SN74LVC1G04DCK
IC4205 UPC4570G2
EP4101 M PZ2012S331A
J4101 B10B-PH-SM4-TB
MAIN-1
MAIN-2
MAIN-3
MAIN-5
MAIN-6
To LOGIC UNIT
Explanatory notes
TX Line
RX Line
Common Line
Voltage Line
*; Refer to "PARTS LIST."

MAIN UNIT (5/6)

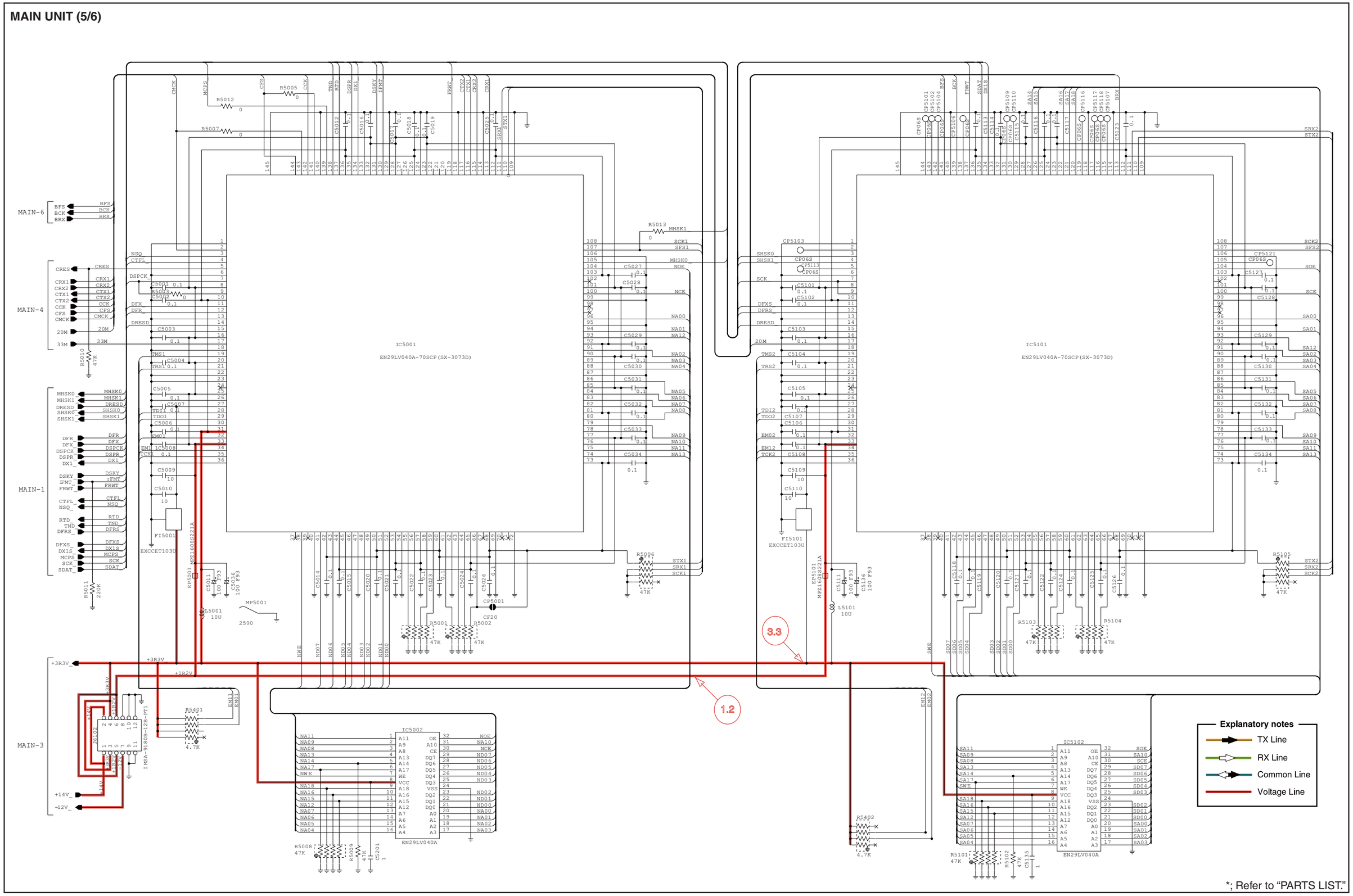

*; Refer to "PARTS LIST."

MAIN UNIT (6/6)

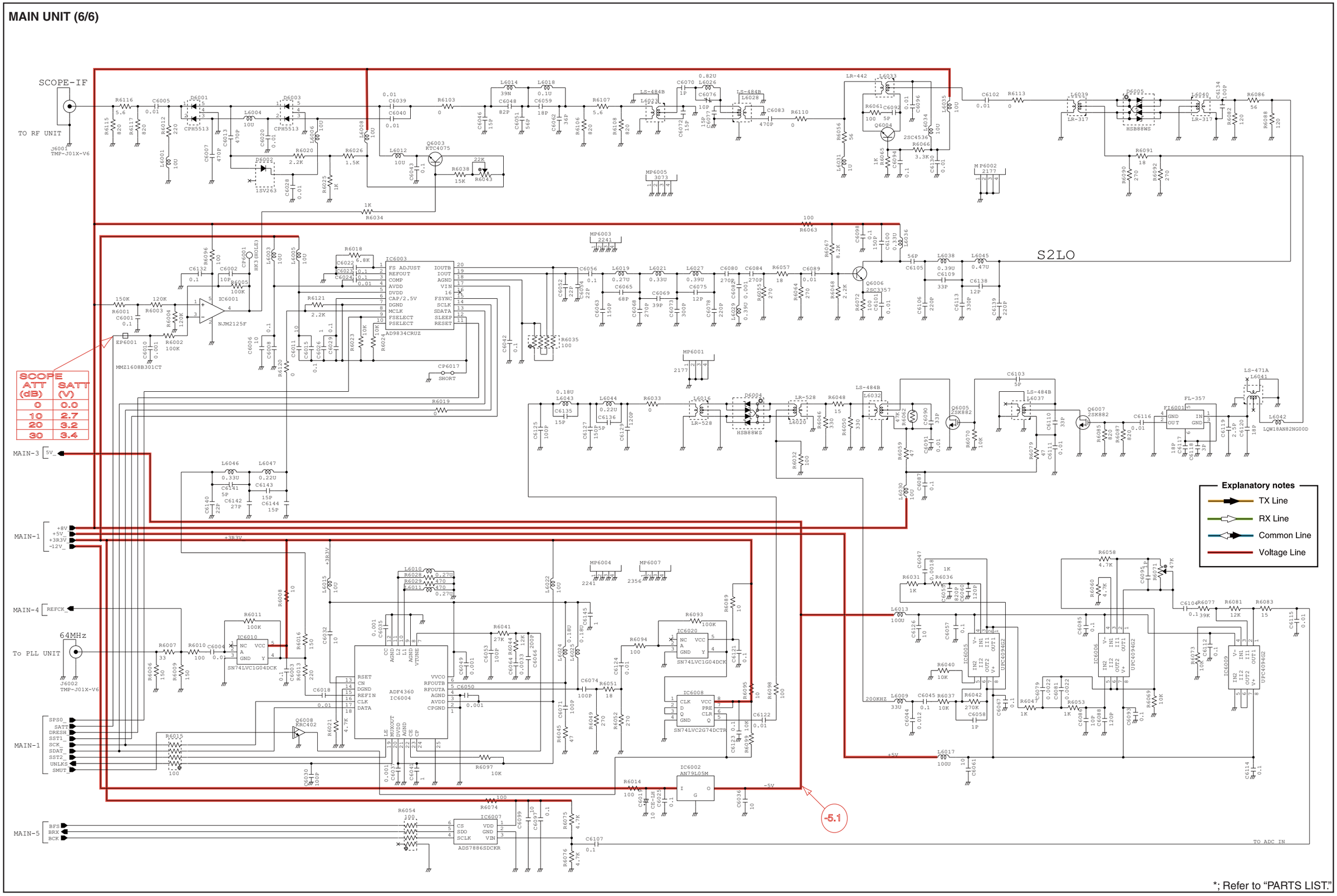

SCOPE ATT (dB)	SATT (V)
0	0.0
10	2.7
20	3.2
30	3.4

*; Refer to "PARTS LIST."

PLL UNIT (1/3)

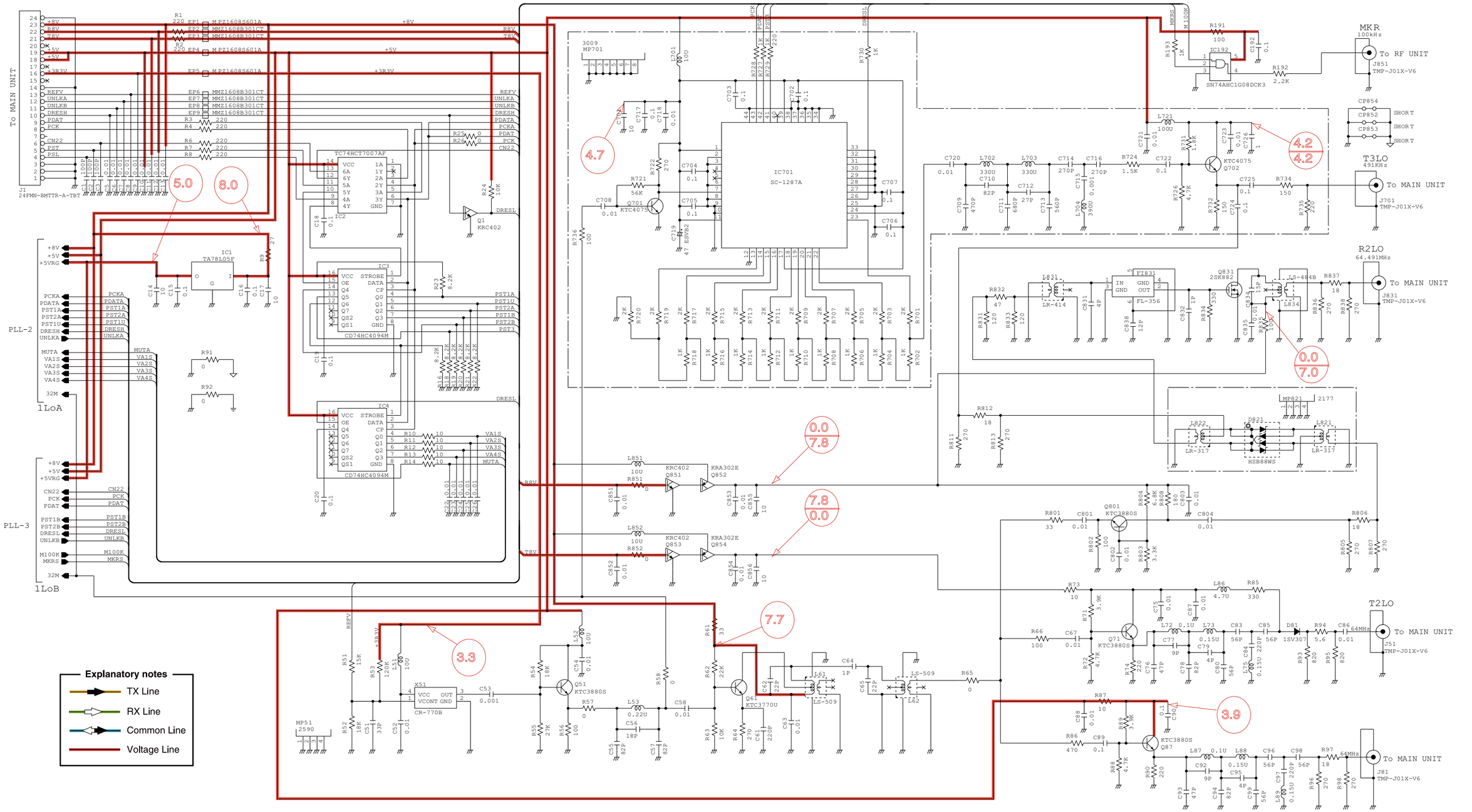

*; Refer to "PARTS LIST."

PLL UNIT (2/3)

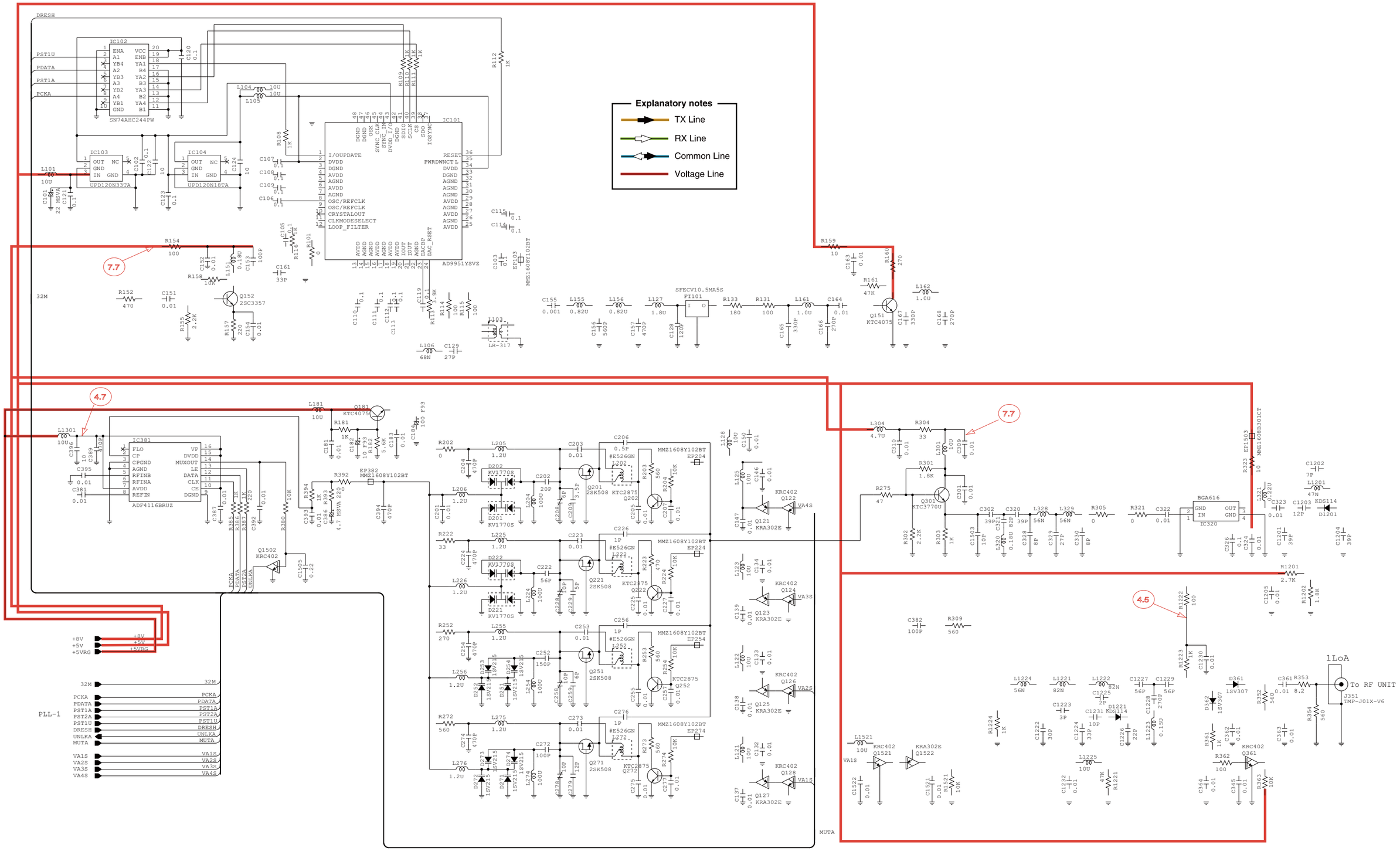

*; Refer to "PARTS LIST."

PLL UNIT (3/3)

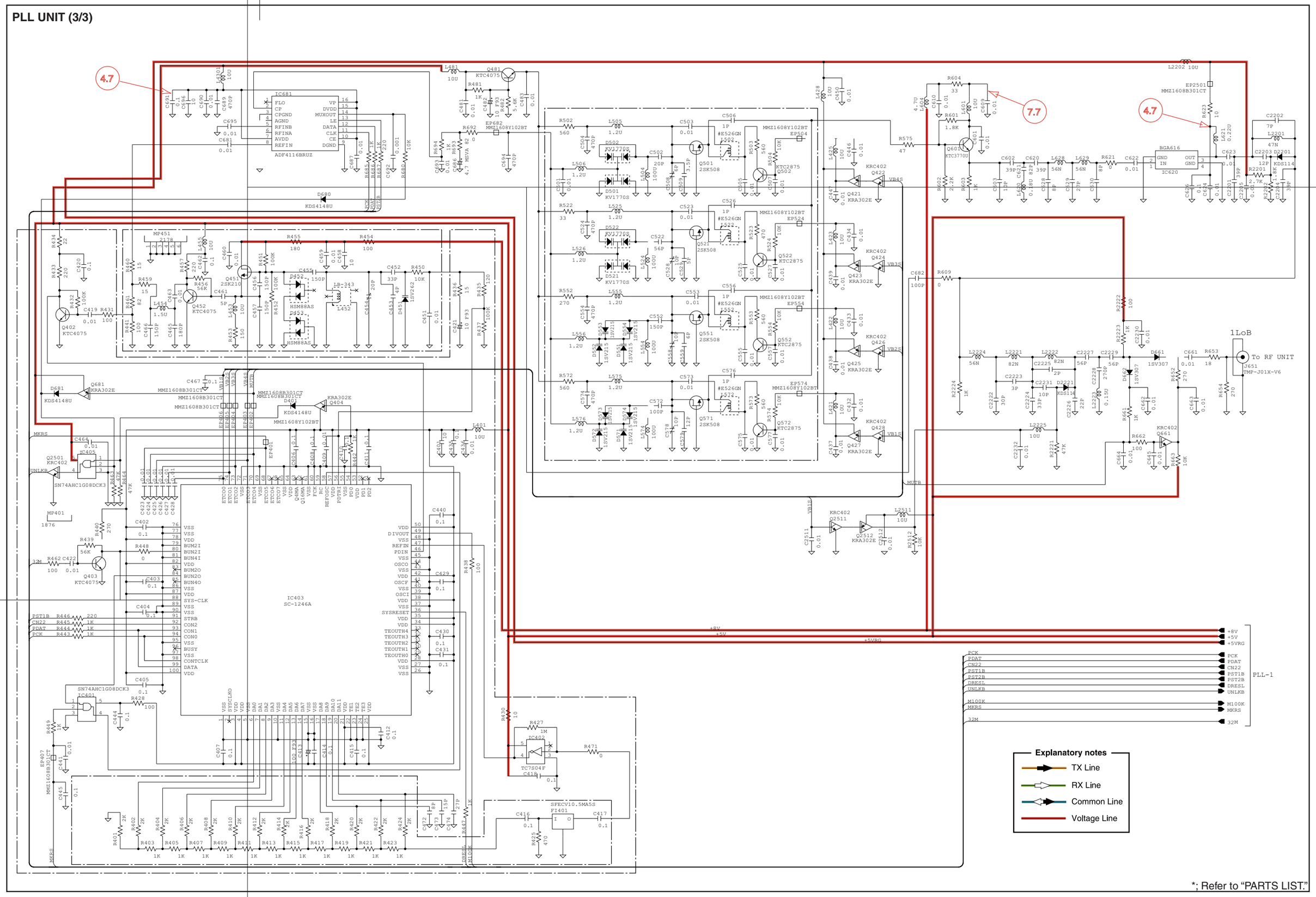

*; Refer to "PARTS LIST."

RF UNIT (1/2)

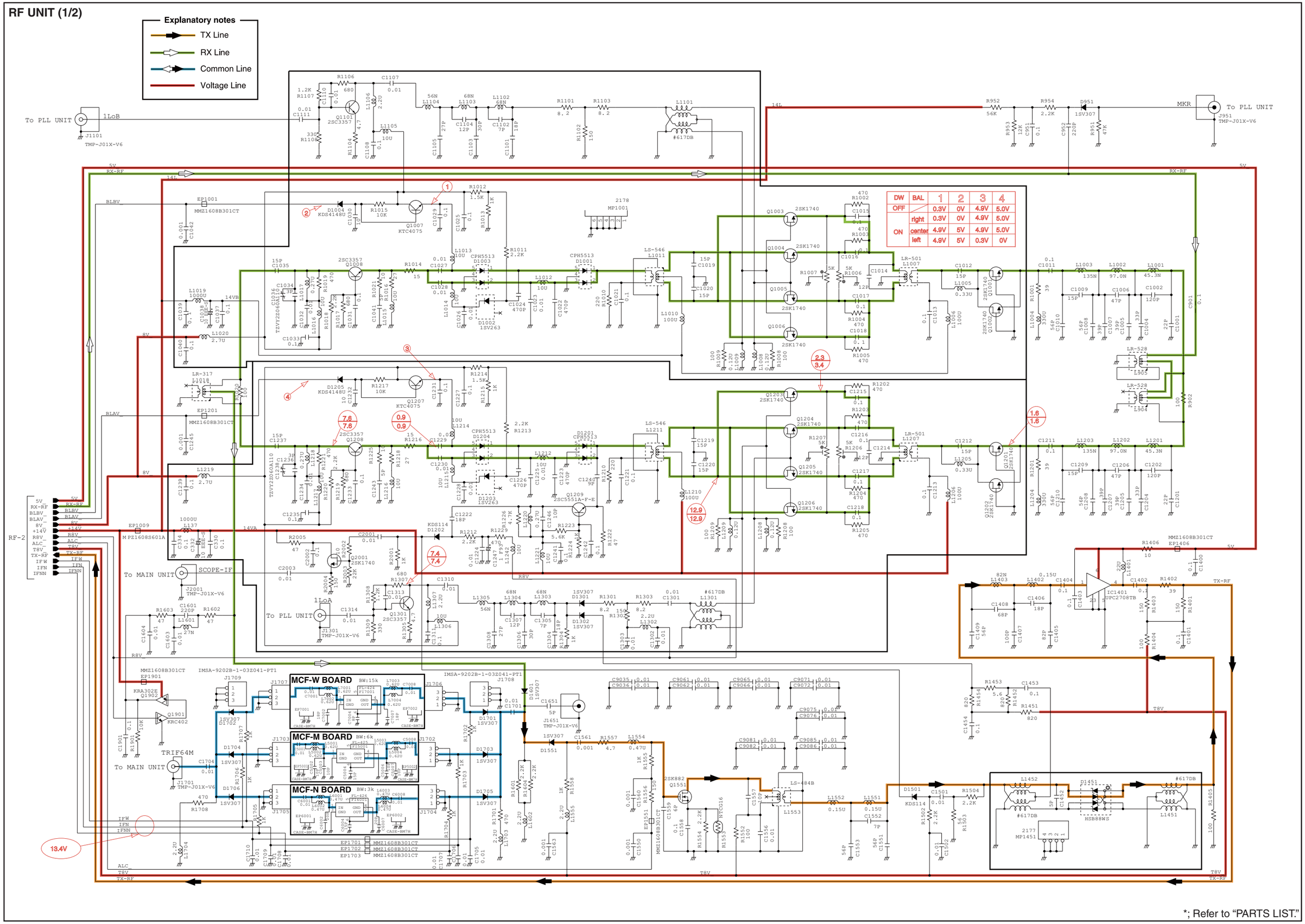

*; Refer to "PARTS LIST."

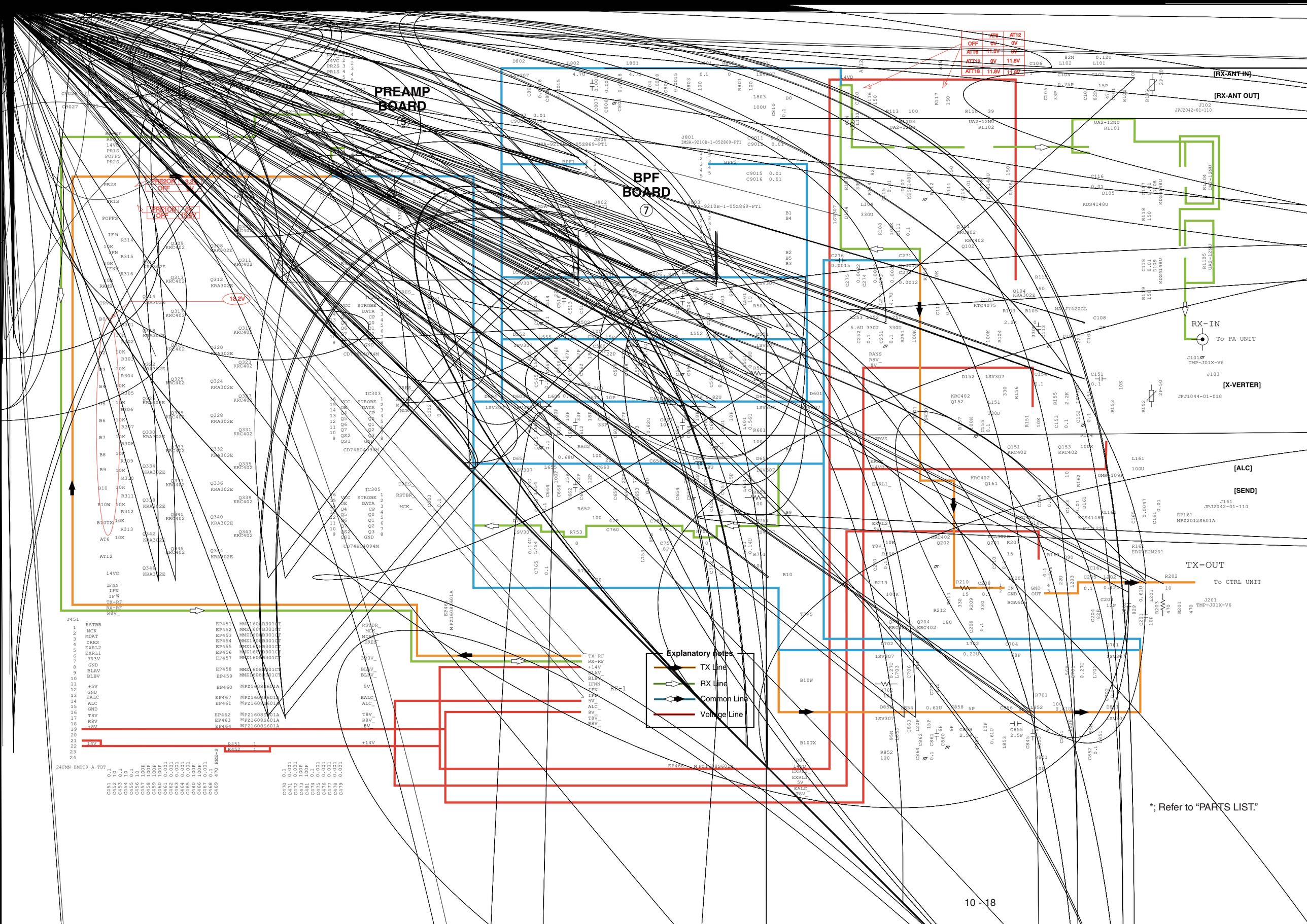
PREAMP BOARD
5
BPF BOARD
7
[RX-ANT IN]
[RX-ANT OUT]
RX-IN
To PA UNIT
[X-VERTER]
[ALC]
[SEND]
TX-OUT
To CTRL UNIT
Explanatory notes
TX Line
RX Line
Common Line
Voltage Line
*; Refer to "PARTS LIST."

TUNER UNIT

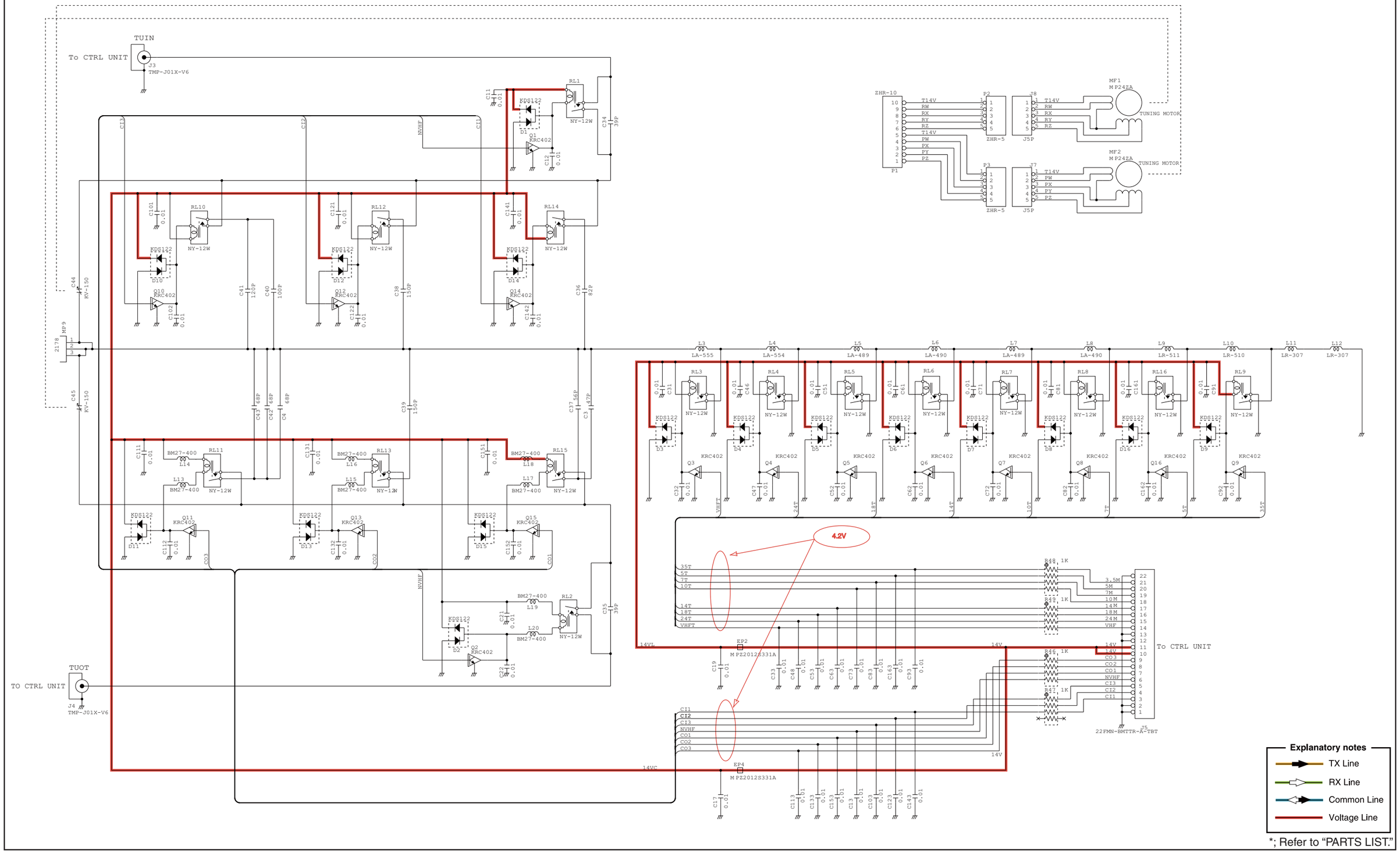

*; Refer to "PARTS LIST."

FILTER UNIT

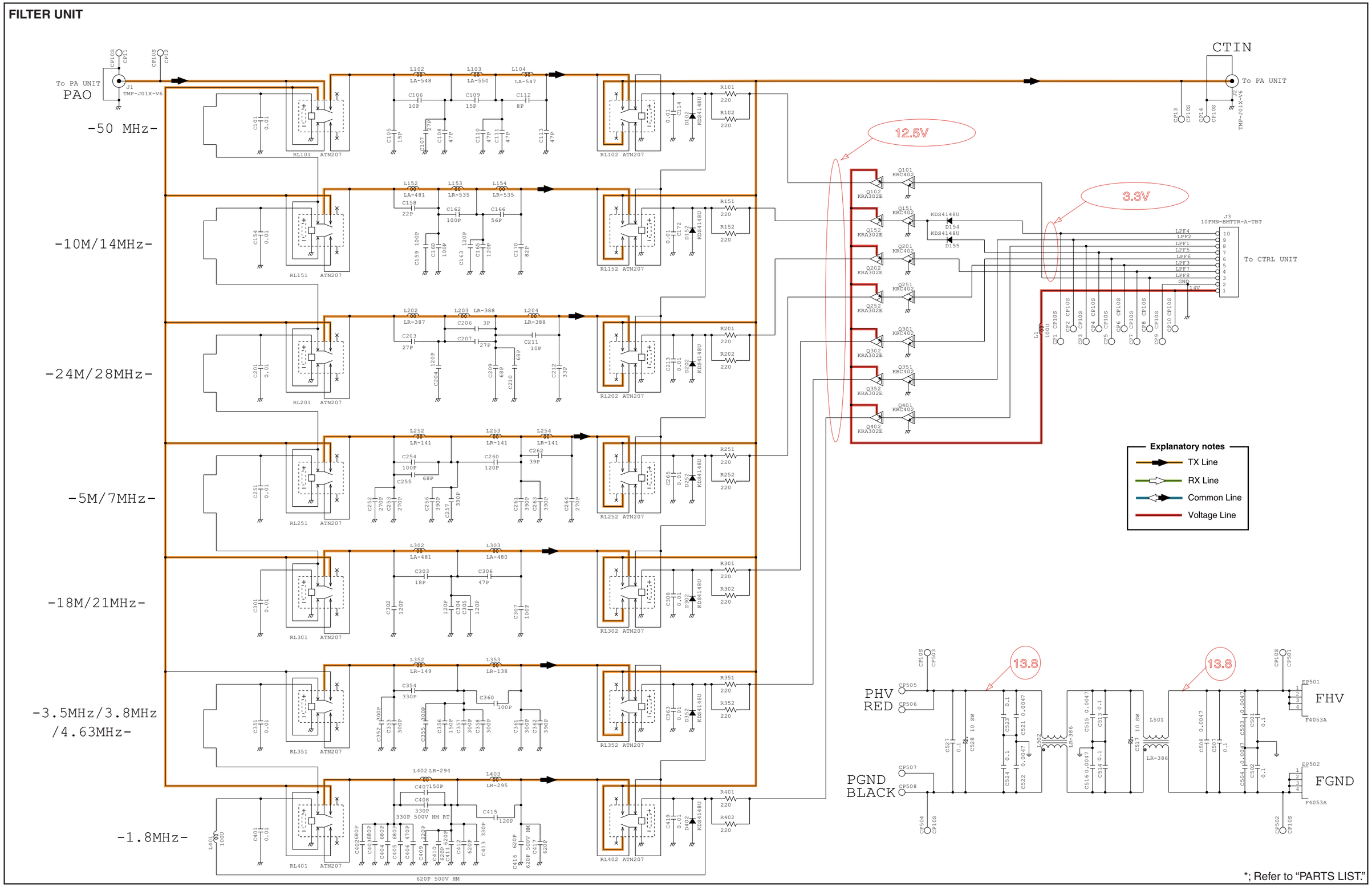
To PA UNIT
PAO
J1
TMP-J01X-V6
-50 MHz-
-10M/14MHz-
-24M/28MHz-
-5M/7MHz-
-18M/21MHz-
-3.5MHz/3.8MHz
/4.63MHz-
-1.8MHz-
CTIN
To PA UNIT
12.5V
3.3V
J3
10FMN-BMTTR-A-TBT
To CTRL UNIT
Explanatory notes
TX Line
RX Line
Common Line
Voltage Line
13.8
13.8
PHV
RED
PGND
BLACK
FHV
FGND
EP501
EP502
F4053A
*; Refer to "PARTS LIST."

CTRL UNIT (1/3)

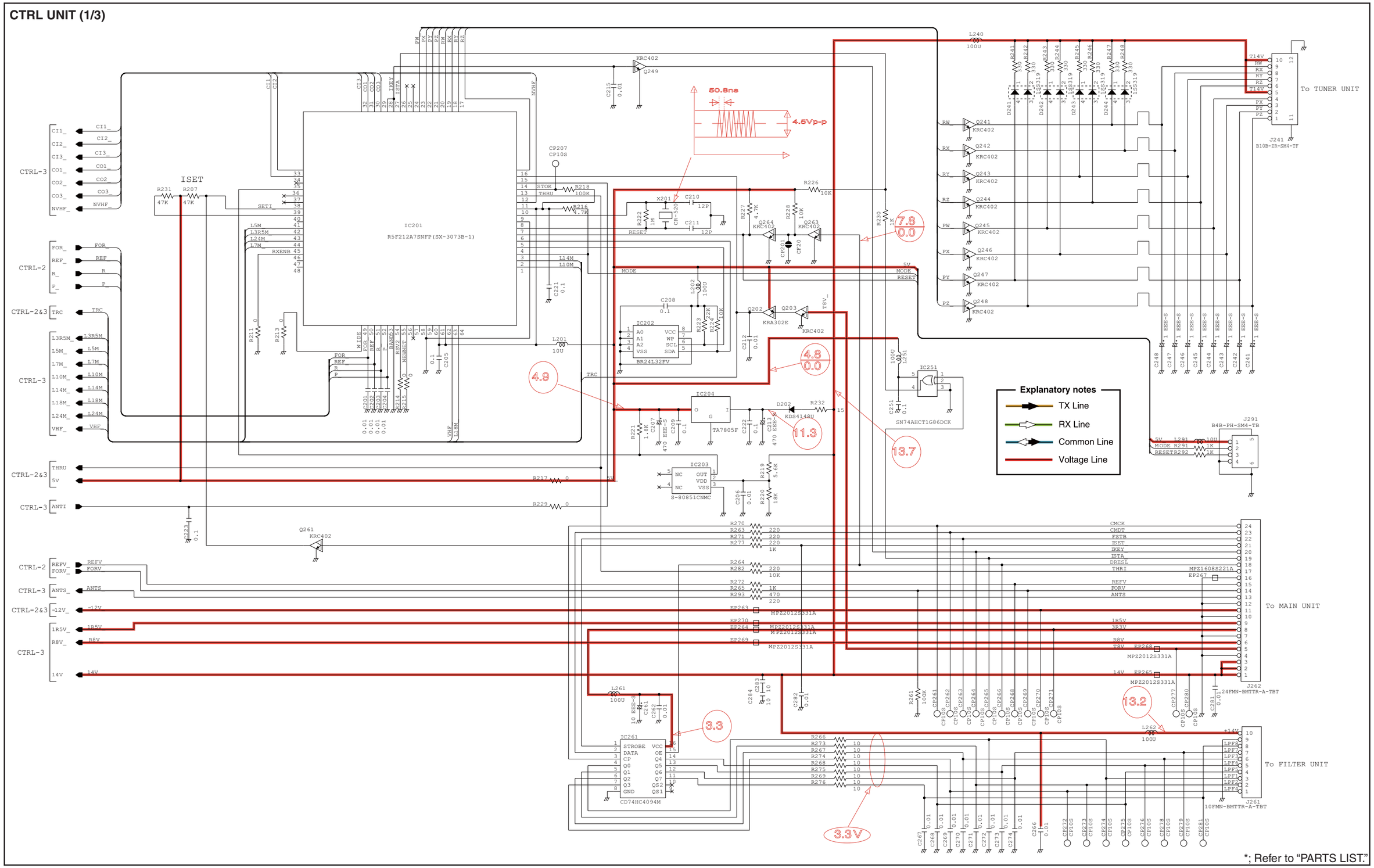
IC201
R5F212A7SNFP(SX-3073B-1)
IC202
BR24L32FV
IC203
S-80851CNMC
IC204
TA7805F
IC251
SN74AHCT1G86DCK
IC261
CD74HC4094M
J241
B10B-ZR-SM4-TF
To TUNER UNIT
J291
B4B-PH-SM4-TB
To MAIN UNIT
J262
24FMN-BMTTR-A-TBT
To FILTER UNIT
J261
10FMN-BMTTR-A-TBT
50.8ns
4.5Vp-p
ISET
7.8
0.0
4.8
0.0
4.9
11.3
13.7
13.2
3.3
3.3V
Explanatory notes
TX Line
RX Line
Common Line
Voltage Line
*; Refer to "PARTS LIST."

CTRL UNIT (2/3)

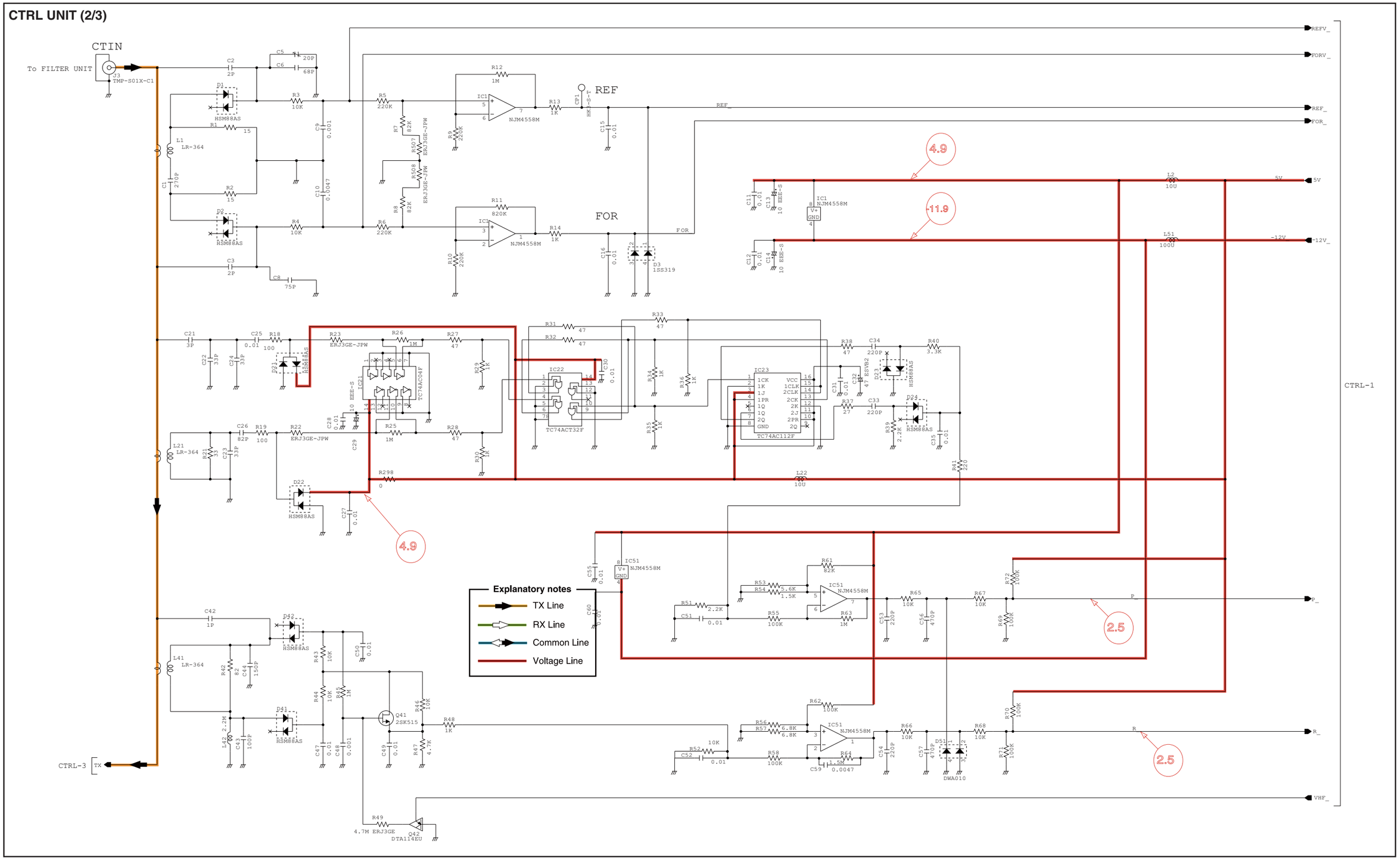

*; Refer to "PARTS LIST."

CTRL UNIT (3/3)

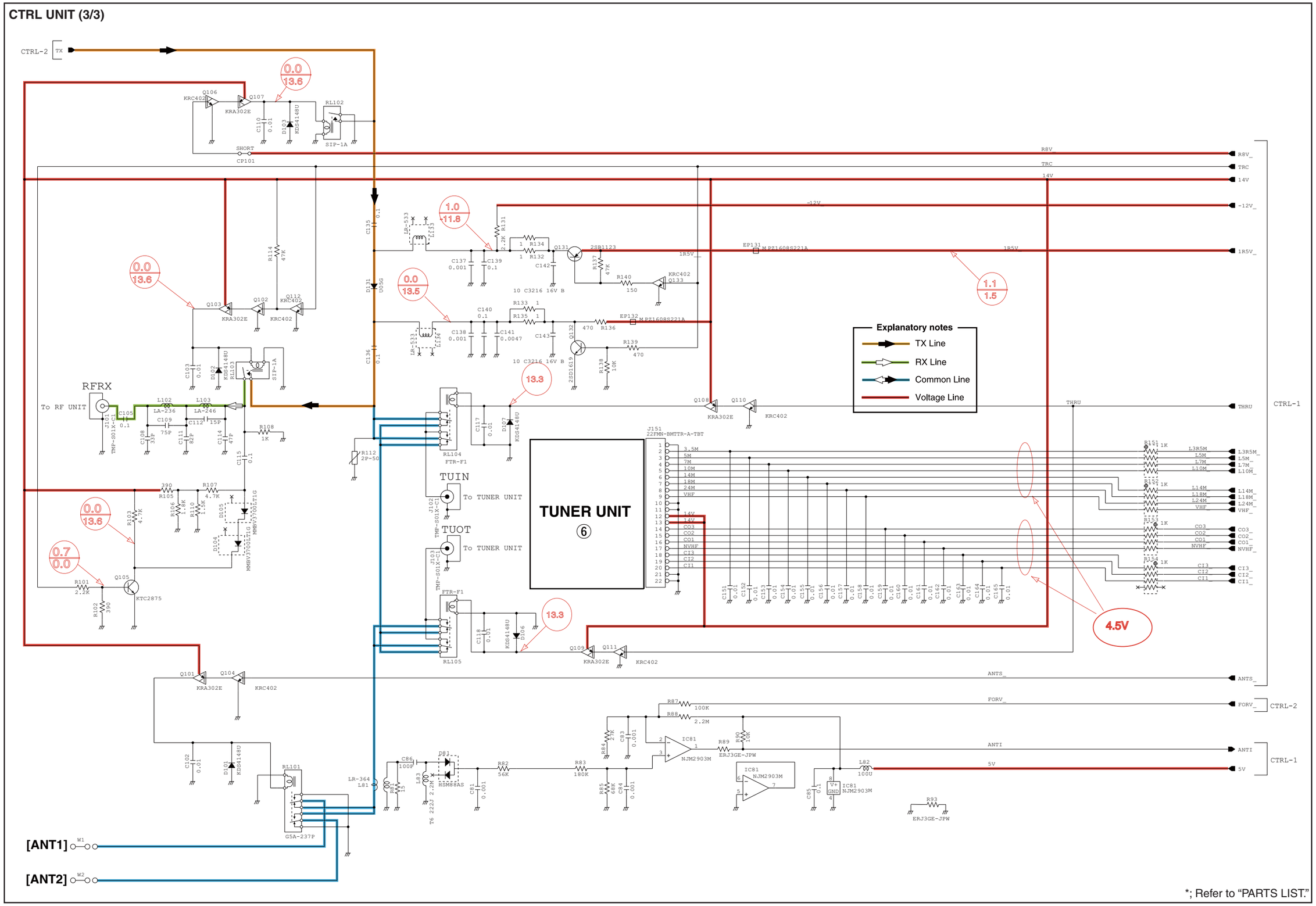

*; Refer to "PARTS LIST."

BPF UNIT

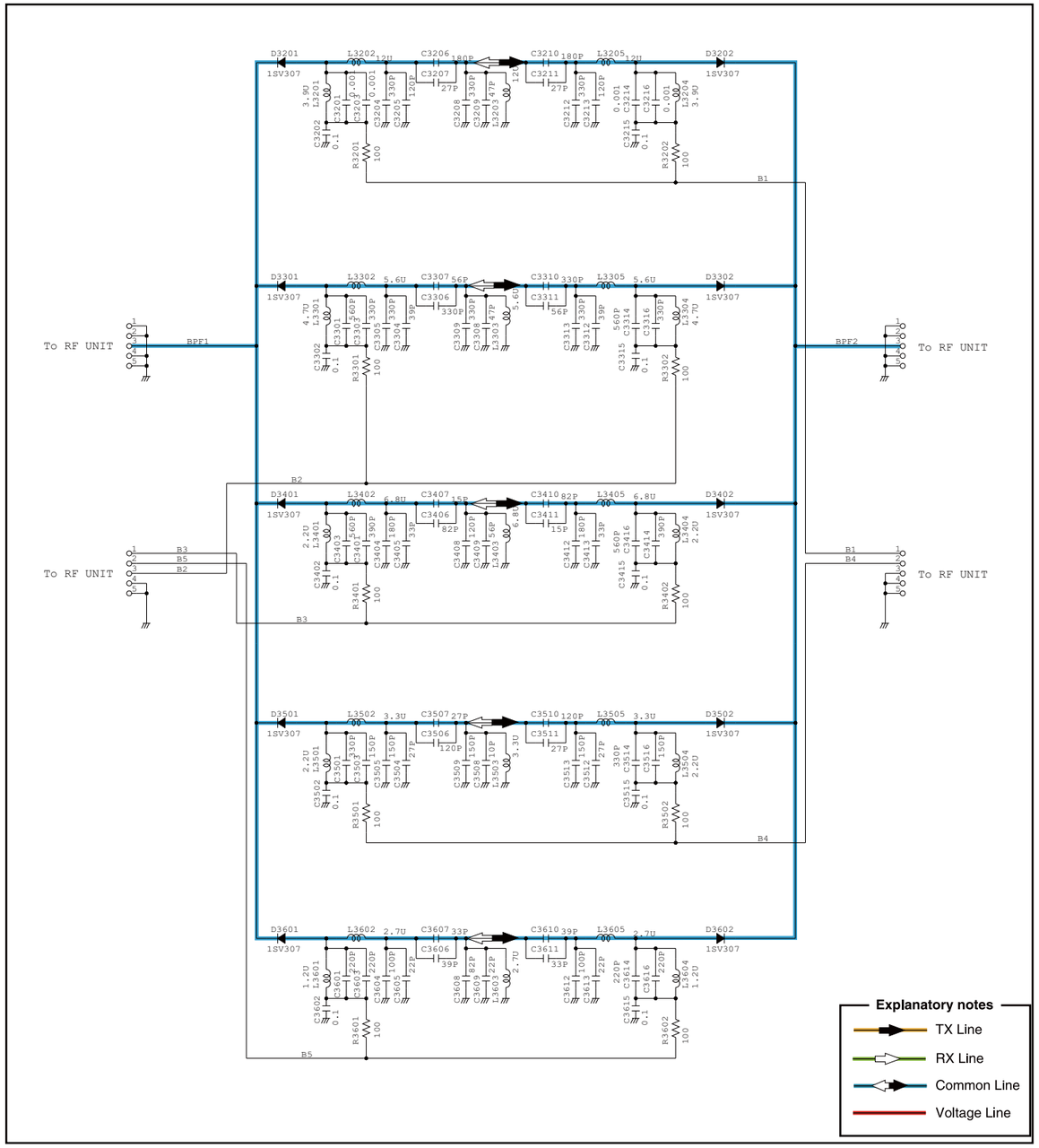

DCDC UNIT

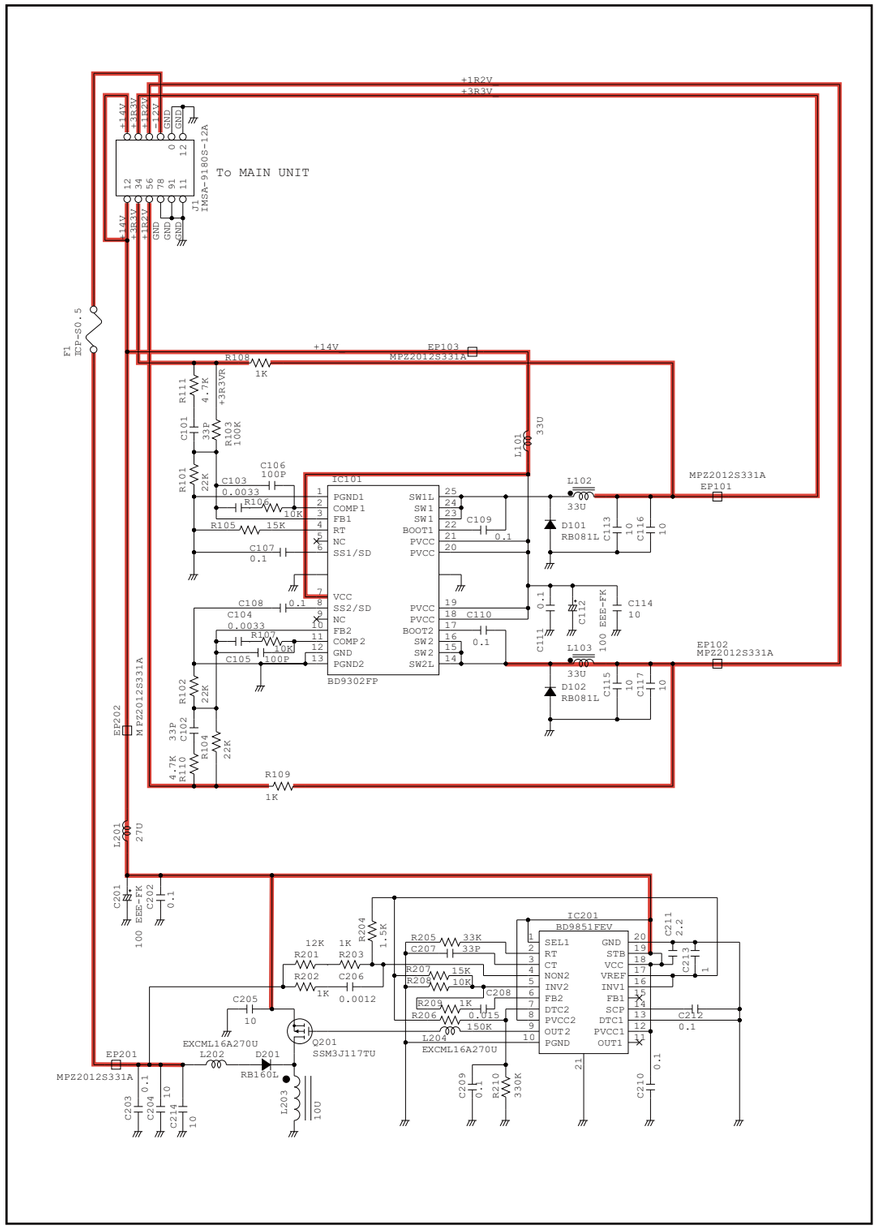

*; Refer to “PARTS LIST.”

PREAMP BOARD

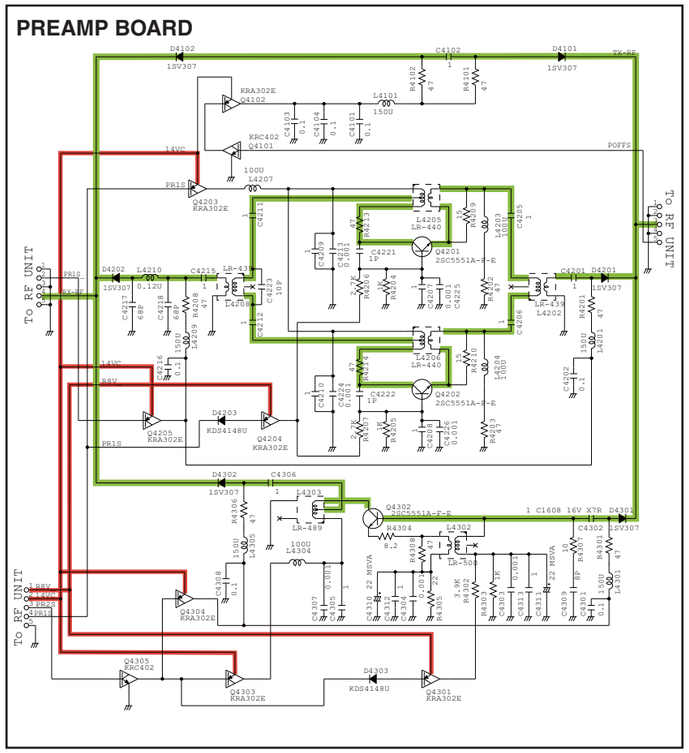

PA UNIT

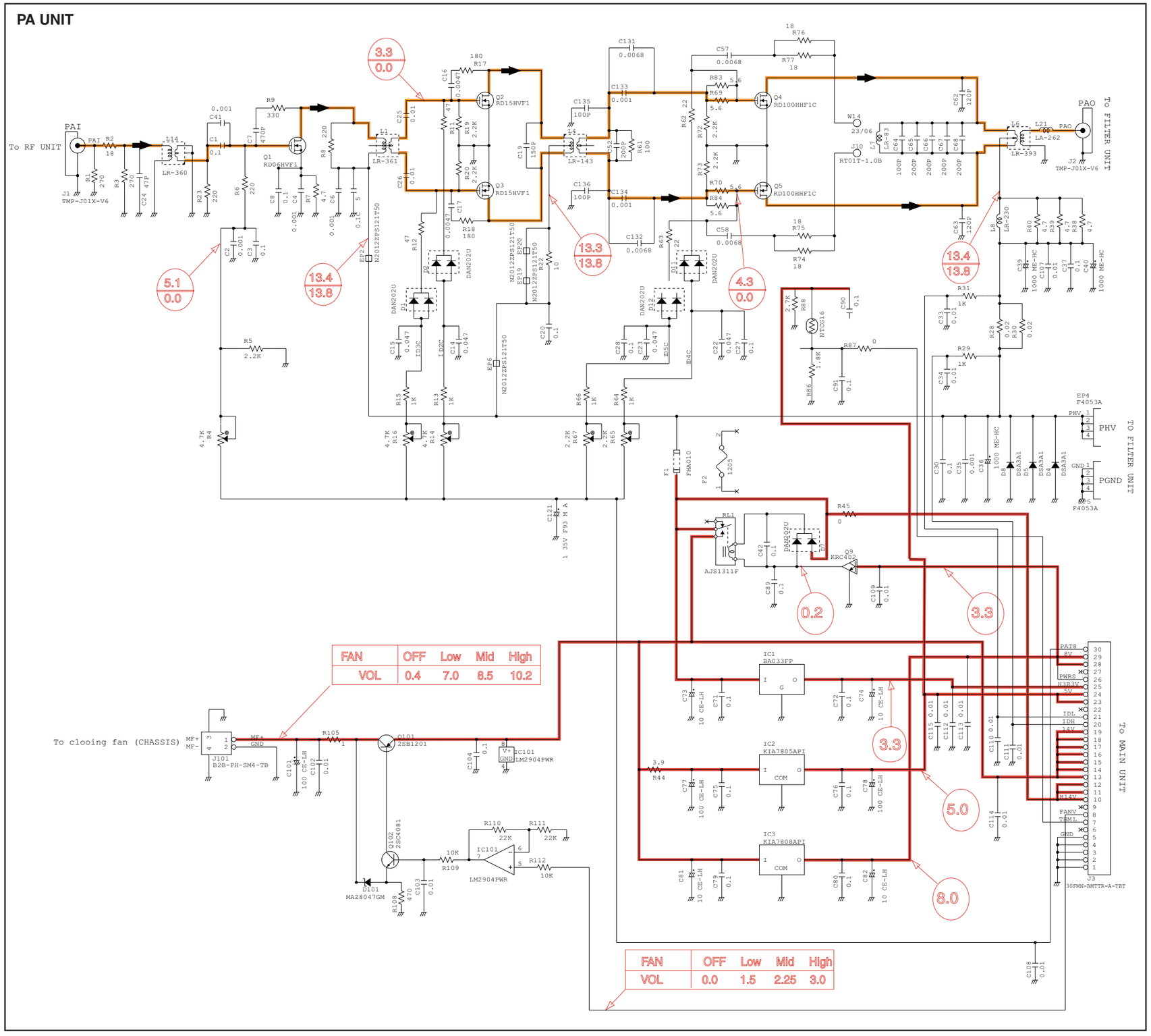

Icom Inc.

1-1-32, Kamiminami, Hirano-ku, Osaka 547-0003, Japan
Phone : +81 (06) 6793 5302
Fax : +81 (06) 6793 0013
URL : http://www.icom.co.jp/world/index.html

Icom America Inc.

<Corporate Headquarters>
2380 116th Avenue N.E., Bellevue, WA 98004, U.S.A.
Phone : +1 (425) 454-8155 Fax : +1 (425) 454-1509
URL : http://www.icomamerica.com
E-mail : sales@icomamerica.com
<Customer Service>
Phone : +1 (425) 454-7619

Icom Canada

Glenwood Centre #150-6165
Highway 17 Delta, B.C., V4K 5B8, Canada
Phone : +1 (604) 952-4266 Fax : +1 (604) 952-0090
URL : http://www.icomcanada.com
E-mail : info@icomcanada.com

Icom (Australia) Pty. Ltd.

Unit 1 / 103 Garden Road, Clayton VIC 3168 Australia
Phone : +61 (03) 9549-7500 Fax : +61 (03) 9549-7505
URL : http://www.icom.net.au
E-mail : sales@icom.net.au

Icom New Zealand

146A Harris Road, East Tamaki,
Auckland, New Zealand
Phone : +64 (09) 274 4062 Fax : +64 (09) 274 4708
URL : http://www.icom.co.nz
E-mail : inquiries@icom.co.nz

Beijing Icom Ltd.

10C07, Long silver Mansion, No.88, Yong Ding
Road, Haidian District, Beijing, 100039, China
Phone : +86 (010) 5889 5391/5392/5393
Fax : +86 (010) 5889 5395
E-mail : bjicom@bjicom.com
URL : http://www.bjicom.com

Icom (Europe) GmbH

Communication Equipment
Auf der Krautweide 24
65812 Bad Soden am Taunus, Germany
Phone : +49 (6196) 76685-0 Fax : +49 (6196) 76685-50
URL : http://www.icomeurope.com
E-mail : info@icomeurope.com

Icom Spain S.L

Ctra. Rubi, No. 88 Bajos A 08174, Sant Cugat del Valles, Barcelona, Spain
Phone : +34 (93) 590 26 70 Fax : +34 (93) 589 04 46
URL : http://www.icomspain.com
E-mail : icom@icomspain.com

Icom (UK) Ltd.

Unit 9, Sea St., Herne Bay, Kent, CT6 8LD, U.K.
Phone : +44 (01227) 741741 Fax : +44 (01227) 741742
URL : http://www.icomuk.co.uk
E-mail : info@icomuk.co.uk

Icom France s.a.s.

Zac de la Plaine
1 Rue Brindejonc des Moulinais BP 5804
31505 Toulouse Cedex, France
Phone : +33 (5) 61 36 03 03 Fax : +33 (5) 61 36 03 00
URL : http://www.icom-france.com
E-mail : icom@icom-france.com

Asia Icom Inc.

6F No.68, Sec. 1 Cheng-Teh Road, Taipei, Taiwan, R.O.C.
Phone : +886 (02) 2559 1899 Fax : +886 (02) 2559 1874
URL : http://www.asia-icom.com
E-mail : sales@asia-icom.com

Icom Polska

81-850 Sopot, ul. 3 Maja 54, Poland
Phone : +48 (58) 550 7135 Fax : +48 (58) 551 0484
E-mail : icompolska@icompolska.com.pl

Count on us!

Icom Inc.
1-1-32, Kamiminami, Hirano-ku, Osaka 547-0003, Japan

S-14523XZ-C1
© 2009 Icom Inc.